SIEMENS

Data sheet 3VA5330-5EC36-0AA0

circuit breaker 3VA5 UL Frame 400 breaking capacity class M 35 kA @ 480 V 3-pole, line protection TM230, FTAM, In=300 A overload protection Ir=300 A permanently set short-circuit protection Ii=5...10 x In cable connection on two sides

Model	
product brand name	SENTRON
product designation	Molded-case circuit breaker
product designation / according to UL file	MJAS
design of the product	System protection
design of the load switch / according to UL 489 / Heating, Air Conditioning, and Refrigeration circuit breaker (HACR Type)	Yes
design of the load switch / according to UL 489 / High-Intensity-Discharge circuit breaker (HID Type)	No
design of the load switch / according to UL 489 / Switching Duty circuit breaker (SWD Type)	No
design of the overcurrent release	TM230
protection function of the overcurrent release	LI
number of poles	3
General technical data	
insulation voltage / rated value	800 V
operating voltage / at DC / rated value	500 V
operating voltage / at AC / rated value	690 V
power loss [W] / maximum	70 W
power loss [W] / for rated value of the current / at AC / in hot operating state / per pole	23.4 W
mechanical service life (operating cycles) / typical	20 000
electrical endurance (operating cycles) / at AC-1 / at 380/415 V	6 000
electrical endurance (operating cycles) / at AC-1 / at 690 V	3 000
electrical endurance (operating cycles) / at 480 V	6 000
electrical endurance (operating cycles) / at 600 V	3 000
product feature / for neutral conductors / upgradable/retrofittable / short-circuit and overload proof	No
product function	
● communication function	No
● other measurement function	No
Net Weight	5.896 kg
Current	
marking / according to UL 489 / 100%-rated breaker	No
operational current	
● at 40 °C	300 A
● at 45 °C	294 A
● at 50 °C	288 A
● at 55 °C	282 A
● at 60 °C	276 A

Subject to change without notice
© Copyright Siemens

● at 65 °C	270 A
● at 70 °C	264 A
Switching capacity according to IEC 60947	
switching capacity class of the circuit breaker	M
maximum short-circuit current breaking capacity (Icu)	
● at 240 V	85 kA
● at 415 V	55 kA
● at 690 V	7 kA
operating short-circuit current breaking capacity (Ics)	
● at 240 V	85 kA
● at 415 V	55 kA
● at 690 V	5 kA
short-circuit current making capacity (Icm)	
● at 240 V	187 kA
● at 415 V	121 kA
● at 690 V	11.9 kA
design of short-circuit protection	For switching power values in DC networks, see the 3VA molded case circuit breaker device manual; link to be found under Service & Support in the last chapter
Switching capacity according to UL 489	
current breaking capacity	
● at 240 V	85 kA
● at 480 V	35 kA
● at 600 V	18 kA
Adjustable parameters	
adjustable response value setting current (Ir) / of the L-trip / with I2t characteristic	
● minimum	300 A
● maximum	300 A
adjustable response value delay time (tr) / for L-tripping / with I2t characteristic	
● minimum	1 s
● maximum	1 s
adjustable response value setting current (Ii) / for I-tripping	
● minimum	1 500 A
● maximum	3 000 A
adjustable setting current (InN) / for N-tripping	
● minimum	0 A
● maximum	0 A
product function / grounding protection	No
Mechanical Design	
product component	
● undervoltage release	No
● voltage trigger	No
● trip indicator	No
height [in]	9.76 in
height	248 mm
width [in]	5.43 in
type of connectable conductor cross-sections / of the round conductor terminal / stranded	1 x (1 AWG - 600 kcmil)
width	138 mm
depth [in]	4.33 in
depth	110 mm
Connections	
arrangement of electrical connectors / for main current circuit	Front connection
type of electrical connection / for main current circuit	circular conductor terminal on both sides
Auxiliary circuit	
number of CO contacts / for auxiliary contacts	0
Accessories	
product extension / optional / motor drive	Yes

Subject to change without notice
© Copyright Siemens

Environmental conditions	
protection class IP / on the front	IP40
ambient temperature	
● during operation / minimum	-25 °C
● during operation / maximum	70 °C
● during storage / minimum	-40 °C
● during storage / maximum	80 °C
reference code / according to IEC 81346-2	Q

Approvals / Certificates

General Product Approval

CCC	EG-Konf.		Confirmation	UL	UL

General Product Approval			EMV	Test Certificates	other
Miscellaneous	EAC		RCM	Type Test Certificates/Test Report	Confirmation

other	Environment
Miscellaneous	Environmental Confirmations

Further information

Information on the packaging
https://support.industry.siemens.com/cs/ww/en/view/109813875
Information for data generation and storage
https://support.industry.siemens.com/cs/ww/en/view/109995012
Information- and Downloadcenter (Catalogs, Brochures,…)
https://www.siemens.com/lowvoltage/catalogs
Industry Mall (Online ordering system)
https://mall.industry.siemens.com/mall/en/en/Catalog/product?mlfb=3VA5330-5EC36-0AA0
Service&Support (Manuals, Certificates, Characteristics, FAQs,...)
https://support.industry.siemens.com/cs/ww/en/ps/3VA5330-5EC36-0AA0
Image database (product images, 2D dimension drawings, 3D models, device circuit diagrams, ...)
https://www.automation.siemens.com/bilddb/cax_en.aspx?mlfb=3VA5330-5EC36-0AA0
CAx-Online-Generator
https://www.siemens.com/cax
Tender specifications
https://www.siemens.com/specifications

Subject to change without notice
© Copyright Siemens

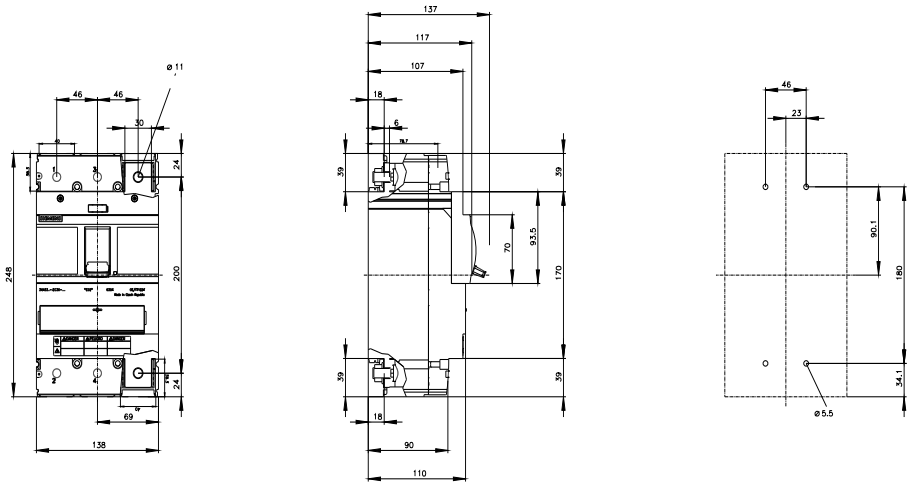

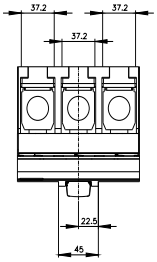

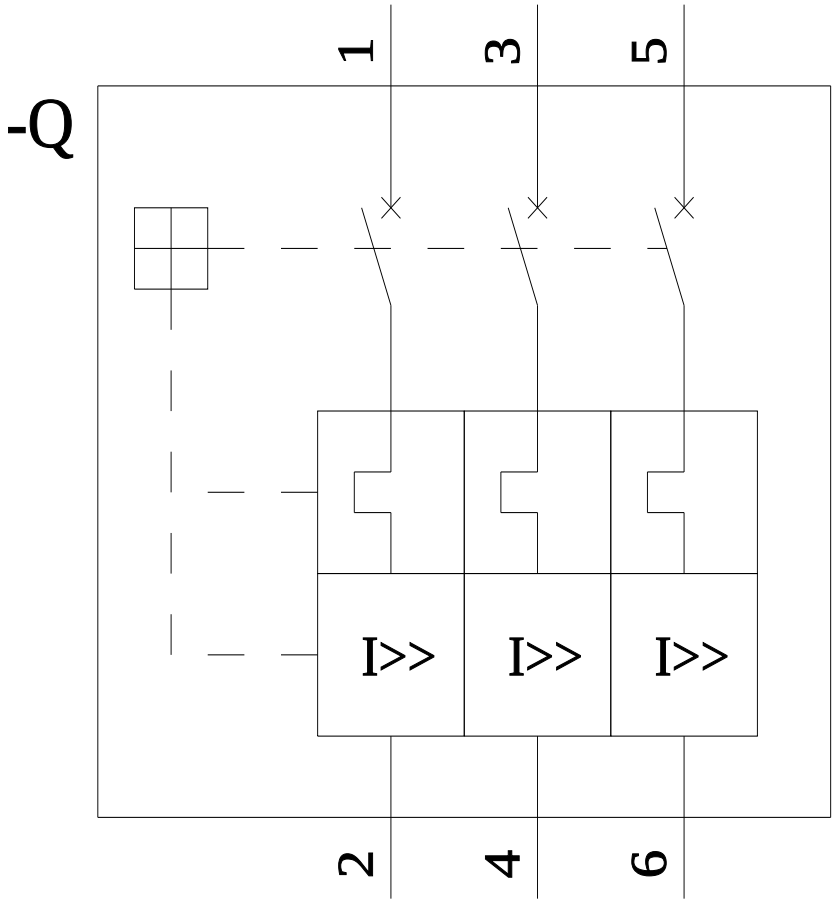

Subject to change without notice
© Copyright Siemens

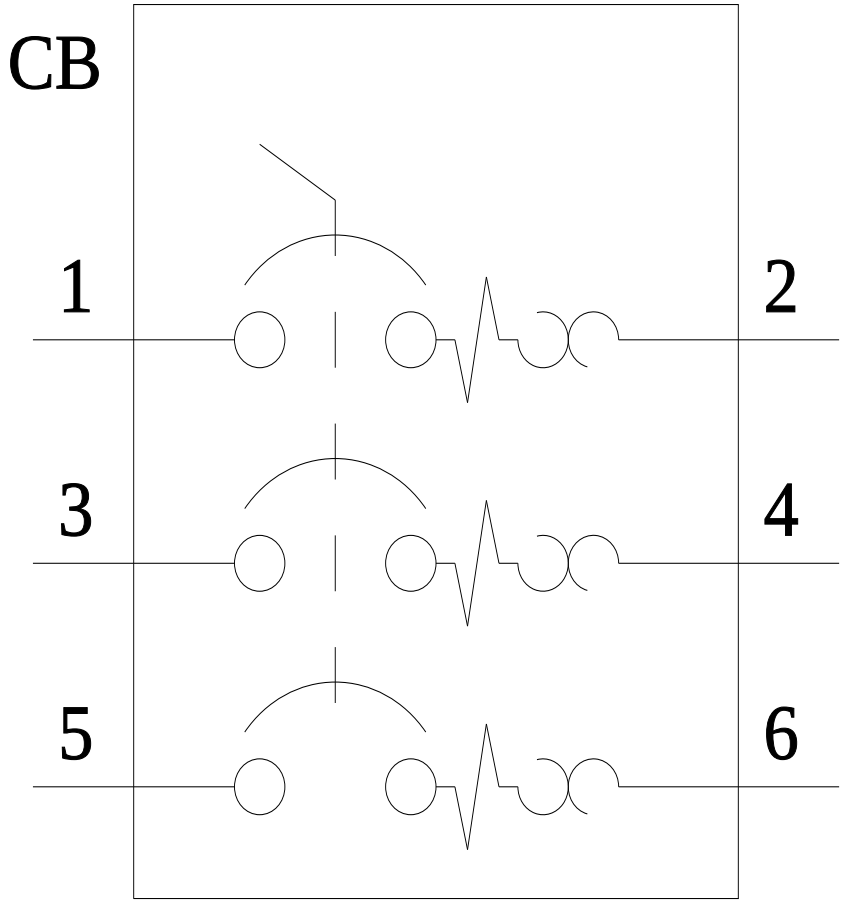

last modified: 4/4/2025

Subject to change without notice
© Copyright Siemens

Subject to change without notice
© Copyright Siemens