SIEMENS

Data sheet 3RA2110-1GE15-1BB4

Load feeder fuseless, Direct-on-line starting 400 V AC, Size S00 4.50...6.30 A 24 V DC Spring-type terminal for installation on standard mounting rail Type of coordination 1, Iq = 150 kA 1 NO (contactor)

product brand name	SIRIUS
product designation	Direct (on-line) starter
design of the product	for standard rail or screw mounting
product type designation	3RA21
manufacturer's article number	
● of the supplied contactor	3RT2015-2BB41
● of the supplied circuit-breakers	3RV2011-1GA20
● of the supplied link module	3RA2911-2AA00
General technical data	
size of the circuit-breaker	S00
size of load feeder	S00
power loss [W] for rated value of the current	
● at AC in hot operating state per pole	2.6 W
● without load current share typical	4 W
insulation voltage with degree of pollution 3 at AC rated value	690 V
surge voltage resistance rated value	6 kV
degree of protection NEMA rating	other
shock resistance according to IEC 60068-2-27	6g / 11 ms
mechanical service life (operating cycles) of contactor typical	30 000 000
type of assignment	1
reference code according to IEC 81346-2:2019	Q
Substance Prohibitance (Date)	10/01/2009
SVHC substance name	Lead - 7439-92-1
Ambient conditions	
ambient temperature	
● during operation	-20 ... +60 °C
● during storage	-50 ... +80 °C
● during transport	-50 ... +80 °C
temperature compensation	-20 ... +60 °C
relative humidity during operation	10 ... 95 %
Main circuit	
number of poles for main current circuit	3
design of the switching contact	electromechanical
adjustable current response value current of the current-dependent overload release	4.5 ... 6.3 A
operating voltage	
● rated value	690 V
● at AC-3 rated value maximum	690 V
● at AC-3e rated value maximum	690 V
operating frequency rated value	50 ... 60 Hz

Subject to change without notice
© Copyright Siemens

operational current	
● at AC-3 at 400 V rated value	6.3 A
● at AC-3e at 400 V rated value	6.3 A
operating power	
● at AC-3	
— at 400 V rated value	2 200 W
● at AC-3e	
— at 400 V rated value	2 200 W
Control circuit/ Control	
type of voltage of the control supply voltage	DC
control supply voltage at DC rated value	
●	24 V
holding power of magnet coil at DC	4 W
Auxiliary circuit	
product extension auxiliary switch	Yes
Protective and monitoring functions	
trip class	CLASS 10
design of the overload release	thermal (bimetallic)
response value current of instantaneous short-circuit trip unit	82 A
UL/CSA ratings	
full-load current (FLA) for 3-phase AC motor	
● at 480 V rated value	4.8 A
● at 600 V rated value	6.1 A
yielded mechanical performance [hp]	
● for single-phase AC motor	
— at 110/120 V rated value	0.25 hp
— at 230 V rated value	0.75 hp
● for 3-phase AC motor	
— at 200/208 V rated value	1.5 hp
— at 220/230 V rated value	2 hp
— at 460/480 V rated value	3 hp
— at 575/600 V rated value	5 hp
Short-circuit protection	
product function short circuit protection	Yes
design of the short-circuit trip	magnetic
conditional short-circuit current (Iq)	
● at 400 V according to IEC 60947-4-1 rated value	150 000 A
Installation/ mounting/ dimensions	
mounting position	vertical
fastening method	screw and snap-on mounting onto 35 mm DIN rail
height	198 mm
width	45 mm
depth	97 mm
required spacing	
● for grounded parts	
— forwards	20 mm
— backwards	0 mm
— upwards	50 mm
— at the side	20 mm
— downwards	10 mm
● for live parts	
— forwards	20 mm
— backwards	0 mm
— upwards	50 mm
— downwards	10 mm
— at the side	20 mm
Connections/ Terminals	
type of electrical connection	
● for main current circuit	spring-loaded terminals
● for auxiliary and control circuit	spring-loaded terminals

Subject to change without notice
© Copyright Siemens

Safety related data	
product function suitable for safety function	Yes
Electrical Safety	
touch protection on the front according to IEC 60529	finger-safe, for vertical contact from the front

Communication/ Protocol	
protocol is supported	
● PROFINET IO protocol	No
● PROFIsafe protocol	No
protocol is supported AS-Interface protocol	No

Approvals Certificates

General Product Approval					For use in hazardous locations
EG-Konf.	UK CA	Confirmation	UL	EAC	ATEX

Test Certificates		Marine / Shipping			
Special Test Certificate	Type Test Certificates/Test Report	ABS	BUREAU VERITAS	DNV	LRS

Marine / Shipping			other	Railway	Dangerous Good
PRS	RINA	RMRS	Confirmation	Special Test Certificate	Transport Information

Environment
Environmental Confirmations

Further information

Information on the packaging
https://support.industry.siemens.com/cs/ww/en/view/109813875
Information- and Downloadcenter (Catalogs, Brochures,…)
https://www.siemens.com/ic10
Industry Mall (Online ordering system)
https://mall.industry.siemens.com/mall/en/en/Catalog/product?mlfb=3RA2110-1GE15-1BB4
Cax online generator
http://support.automation.siemens.com/WW/CAXorder/default.aspx?lang=en&mlfb=3RA2110-1GE15-1BB4
Service&Support (Manuals, Certificates, Characteristics, FAQs,...)
https://support.industry.siemens.com/cs/ww/en/ps/3RA2110-1GE15-1BB4
Image database (product images, 2D dimension drawings, 3D models, device circuit diagrams, EPLAN macros, ...)
http://www.automation.siemens.com/bilddb/cax_de.aspx?mlfb=3RA2110-1GE15-1BB4&lang=en
Characteristic: Tripping characteristics, I^2t, Let-through current
https://support.industry.siemens.com/cs/ww/en/ps/3RA2110-1GE15-1BB4/char
Further characteristics (e.g. electrical endurance, switching frequency)
http://www.automation.siemens.com/bilddb/index.aspx?view=Search&mlfb=3RA2110-1GE15-1BB4&objecttype=14&gridview=view1

Subject to change without notice
© Copyright Siemens

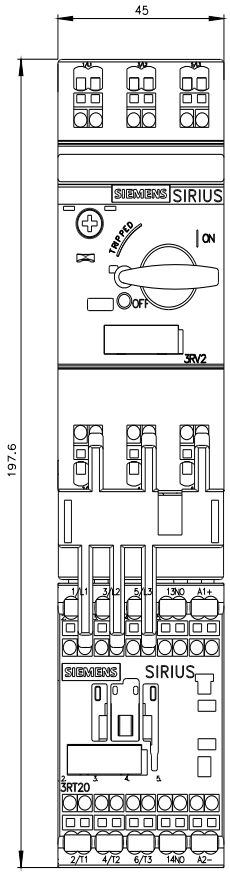

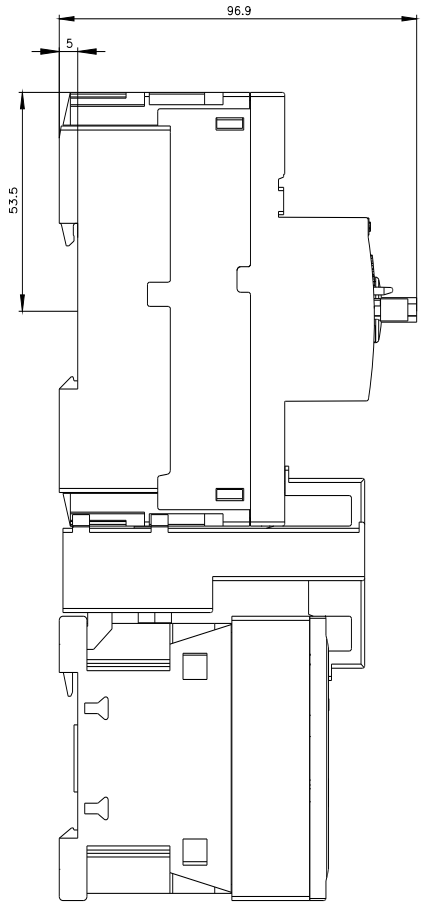

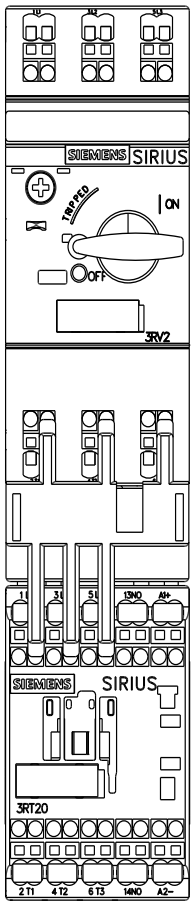

Subject to change without notice
© Copyright Siemens

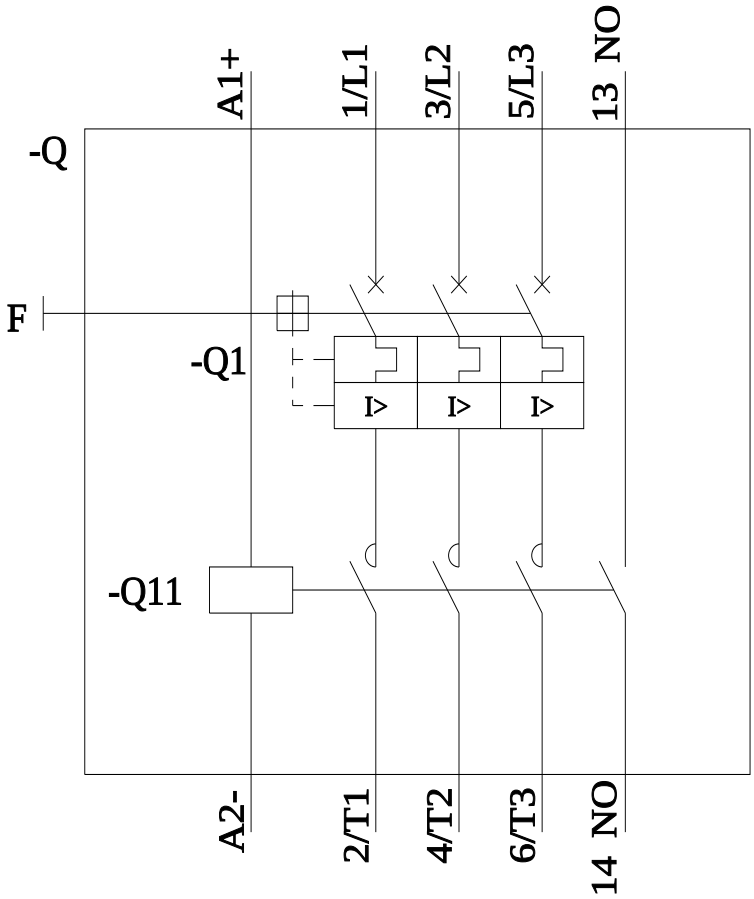

last modified: 6/4/2024

Subject to change without notice
© Copyright Siemens