SIEMENS

Data sheet 3VA6110-6JP36-0AA0

Siemens EcoTech

circuit breaker 3VA6 UL Frame 150 breaking capacity class H 65 kA @ 480 V 3-pole, line protection ETU550, LSI, In=100 A overload protection Ir=40 A ...100 A short-circuit protection Isd=0.6..10x In, Ii=1.5..12x In neutral conductor protection optionally with ext. CT; up to 160% cable connection on two sides

Model	
product brand name	SENTRON
product designation	Molded-case circuit breaker
product designation / according to UL file	HDAE
design of the product	System protection
design of the load switch / according to UL 489 / Heating, Air Conditioning, and Refrigeration circuit breaker (HACR Type)	Yes
design of the overcurrent release	ETU550
protection function of the overcurrent release	LSI
number of poles	3
General technical data	
insulation voltage / rated value	800 V
operating voltage / at AC / rated value	690 V
power loss [W] / maximum	13 W
power loss [W] / for rated value of the current / at AC / in hot operating state / per pole	4.33 W
mechanical service life (operating cycles) / typical	25 000
electrical endurance (operating cycles) / at AC-1 / at 380/415 V	14 000
electrical endurance (operating cycles) / at AC-1 / at 690 V	9 800
electrical endurance (operating cycles) / at 480 V	14 000
electrical endurance (operating cycles) / at 600 V	9 800
product feature / for neutral conductors / upgradable/retrofittable / short-circuit and overload proof	Yes
ground-fault monitoring version	without
product function	
● communication function	Yes
● other measurement function	No
Net Weight	2.709 kg
Current	
marking / according to UL 489 / 100%-rated breaker	No
operational current	
● at 40 °C	100 A
● at 45 °C	100 A
● at 50 °C	100 A
● at 55 °C	100 A
● at 60 °C	100 A
● at 65 °C	100 A
● at 70 °C	100 A

Subject to change without notice
© Copyright Siemens

Switching capacity according to IEC 60947	
switching capacity class of the circuit breaker	H
maximum short-circuit current breaking capacity (Icu)	
● at 240 V	110 kA
● at 415 V	85 kA
● at 690 V	2.5 kA
operating short-circuit current breaking capacity (Ics)	
● at 240 V	110 kA
● at 415 V	85 kA
● at 690 V	2.5 kA
short-circuit current making capacity (Icm)	
● at 240 V	242 kA
● at 415 V	187 kA
● at 690 V	3.8 kA
Switching capacity according to UL 489	
current breaking capacity	
● at 240 V	100 kA
● at 480 V	65 kA
● at 600 V	22 kA
Adjustable parameters	
adjustable response value setting current (Ir) / of the L-trip / with I2t characteristic	
● minimum	40 A
● maximum	100 A
adjustable response value delay time (tr) / for L-tripping / with I2t characteristic	
● minimum	0.5 s
● maximum	25 s
adjustable response value setting current (Isd) / of S-trip / with I0t characteristic	
● minimum	60 A
● maximum	1 000 A
adjustable response value setting current (Isd) / of S-trip / with I2t characteristic	
● minimum	60 A
● maximum	1 000 A
adjustable response value delay time (tsd) / for S-tripping / with I0t characteristic	
● minimum	0.05 s
● maximum	0.5 s
adjustable response value delay time (tsd) / for S-tripping / with I2t characteristic	
● minimum	0.05 s
● maximum	0.5 s
adjustable response value setting current (Ii) / for I-tripping	
● minimum	150 A
● maximum	1 200 A
adjustable setting current (InN) / for N-tripping	
● minimum	0 A
● maximum	0 A
design of the N-conductor protection	adjustable OFF; 20% to 160%
product function / grounding protection	No
Mechanical Design	
product component	
● undervoltage release	No
● voltage trigger	No
● trip indicator	No
height [in]	7.8 in
height	198 mm
width [in]	4.13 in
type of connectable conductor cross-sections / of the round conductor terminal / stranded	1 x (14 AWG ... 1/0)
width	105 mm

Subject to change without notice
© Copyright Siemens

depth [in]	3.39 in
depth	86 mm
Connections	
arrangement of electrical connectors / for main current circuit	Front connection
type of electrical connection / for main current circuit	circular conductor terminal on both sides
Auxiliary circuit	
number of CO contacts / for auxiliary contacts	0
Accessories	
product extension / optional / motor drive	Yes
Environmental conditions	
protection class IP / on the front	IP40
ambient temperature	
• during operation / minimum	-25 °C
• during operation / maximum	70 °C
• during storage / minimum	-40 °C
• during storage / maximum	80 °C
Environmental footprint	
Environmental Product Declaration(EPD)	Yes
global warming potential [CO2 eq] / total	61.814 kg
global warming potential [CO2 eq] / during manufacturing	14.6 kg
global warming potential [CO2 eq] / during operation	48.9 kg
global warming potential [CO2 eq] / after end of life	-2.2 kg
Siemens Eco Profile (SEP)	Siemens EcoTech
reference code / according to IEC 81346-2	Q

Approvals / Certificates

General Product Approval

CCC UK CA EG-Konf. UL UL

Miscellaneous

General Product Approval	EMV	Maritime application	other	
EAC	RCM	ABS	Confirmation	Miscellaneous

Dangerous goods	Environment	
Transport Information	EPD Siemens EcoTech	Environmental Con-firmations

Further information

Information on the packaging
https://support.industry.siemens.com/cs/ww/en/view/109813875
Information- and Downloadcenter (Catalogs, Brochures,…)
http://www.siemens.com/lowvoltage/catalogs
Industry Mall (Online ordering system)
https://mall.industry.siemens.com/mall/en/en/Catalog/product?mlfb=3VA6110-6JP36-0AA0
Service&Support (Manuals, Certificates, Characteristics, FAQs,...)
https://support.industry.siemens.com/cs/ww/en/ps/3VA6110-6JP36-0AA0
Image database (product images, 2D dimension drawings, 3D models, device circuit diagrams, ...)
http://www.automation.siemens.com/bilddb/cax_en.aspx?mlfb=3VA6110-6JP36-0AA0
CAx-Online-Generator
http://www.siemens.com/cax
Tender specifications
http://www.siemens.com/specifications

Subject to change without notice
© Copyright Siemens

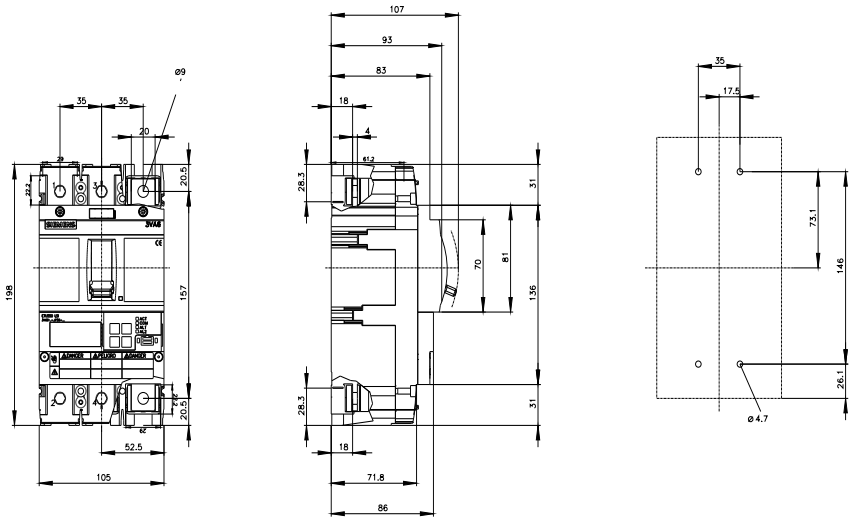

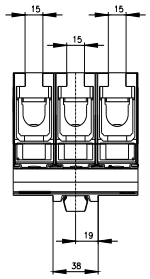

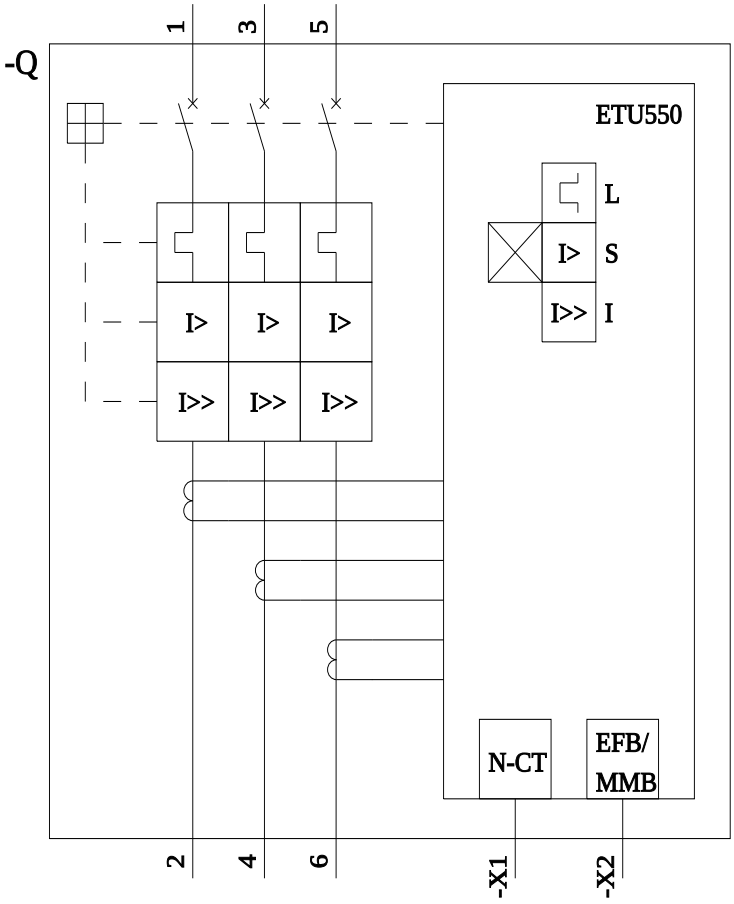

Subject to change without notice
© Copyright Siemens

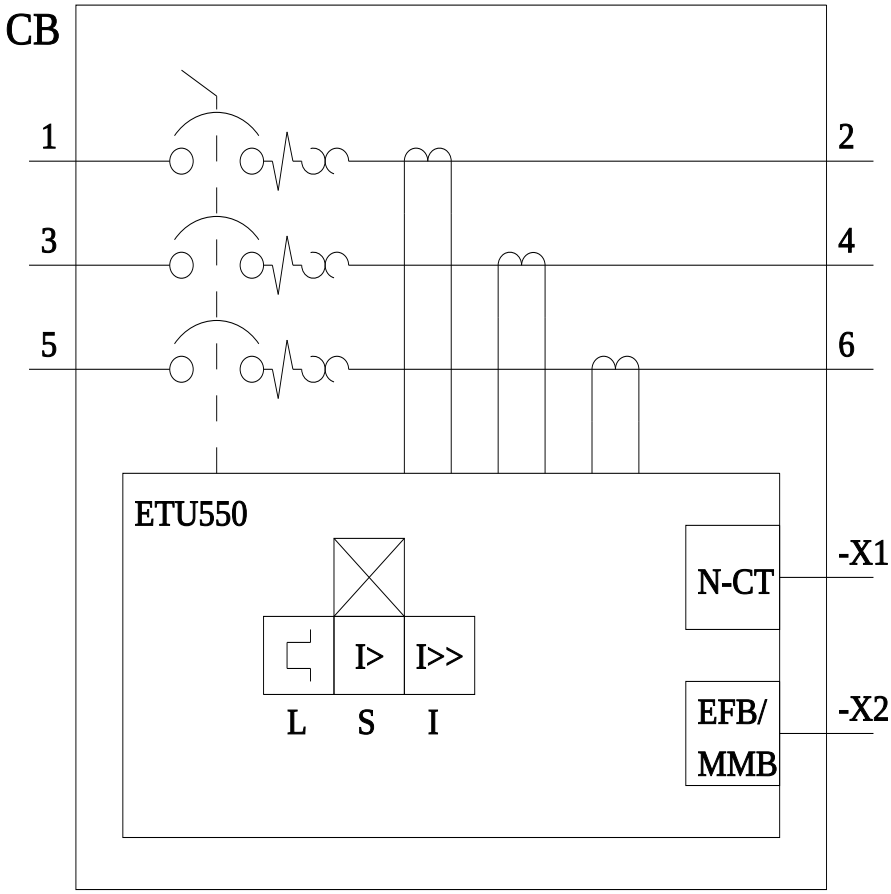

last modified: 5/2/2025

Subject to change without notice
© Copyright Siemens

Subject to change without notice
© Copyright Siemens