SIEMENS

Data sheet 3SU1001-0AB00-0AA0

Siemens EcoTech

Illuminated pushbutton, 22 mm, round, plastic, amber, pushbutton, flat momentary contact type

product brand name	SIRIUS ACT
product designation	Illuminated pushbuttons
design of the product	Actuating/signaling element
product type designation	3SU1
product line	Plastic, black, 22 mm
Enclosure	
number of command points	1
Actuator	
design of the actuating element	Flat button
principle of operation of the actuating element	momentary contact type
product extension optional	
● light source	Yes
● contact module	Yes
color of the actuating element	amber
material of the actuating element	plastic
shape of the actuating element	round
outer diameter of the actuating element	29.5 mm
Front ring	
product component front ring	Yes
design of the front ring	Standard
material of the front ring	plastic
color of the front ring	black
General technical data	
protection class IP	IP66, IP67, IP69(IP69K)
degree of protection NEMA rating	1, 2, 3, 3R, 4, 4X, 12, 13
shock resistance	
● **according to IEC 60068-2-27**	sinusoidal half-wave 15g / 11 ms
● for railway applications according to EN 61373	Category 1, Class B
vibration resistance	
● **according to IEC 60068-2-6**	10 ... 500 Hz: 5g
● for railway applications according to EN 61373	Category 1, Class B
operating frequency maximum	3 600 1/h
mechanical service life (operating cycles) typical	3 000 000
reference code according to IEC 81346-2	S
Substance Prohibitance (Date)	10/01/2014
Ambient conditions	
ambient temperature	

Subject to change without notice
© Copyright Siemens

● during operation	-25 ... +70 °C
● during storage	-40 ... +80 °C
environmental category during operation according to IEC 60721	3M6, 3S2, 3B2, 3C3, 3K6 (with relative air humidity of 10 ... 95%)

Environmental footprint

Environmental Product Declaration(EPD)	Yes
Global Warming Potential [CO2 eq] total	0.787 kg
Global Warming Potential [CO2 eq] during manufacturing	0.566 kg
Global Warming Potential [CO2 eq] during operation	0.235 kg
Global Warming Potential [CO2 eq] after end of life	-0.015 kg
Siemens Eco Profile (SEP)	Siemens EcoTech

Installation/ mounting/ dimensions

height	29.5 mm
width	29.5 mm
shape of the installation opening	round
mounting diameter	22.3 mm
positive tolerance of installation diameter	0.4 mm
mounting height	11 mm
installation width	29.5 mm
installation depth	24.3 mm

Approvals Certificates

General Product Approval			Test Certificates
CE EG-Konf.	UKCA	Confirmation	Special Test Certificate

Test Certificates	other	Environment	
Type Test Certificates/Test Report	Confirmation	EPD	Siemens EcoTech Environmental Confirmations

Further information

Information on the packaging
https://support.industry.siemens.com/cs/ww/en/view/109813875
Information- and Downloadcenter (Catalogs, Brochures,…)
https://www.siemens.com/ic10
Industry Mall (Online ordering system)
https://mall.industry.siemens.com/mall/en/en/Catalog/product?mlfb=3SU1001-0AB00-0AA0
Cax online generator
http://support.automation.siemens.com/WW/CAXorder/default.aspx?lang=en&mlfb=3SU1001-0AB00-0AA0
Service&Support (Manuals, Certificates, Characteristics, FAQs,...)
https://support.industry.siemens.com/cs/ww/en/ps/3SU1001-0AB00-0AA0
Image database (product images, 2D dimension drawings, 3D models, device circuit diagrams, EPLAN macros, ...)
http://www.automation.siemens.com/bilddb/cax_de.aspx?mlfb=3SU1001-0AB00-0AA0&lang=en

Subject to change without notice
© Copyright Siemens

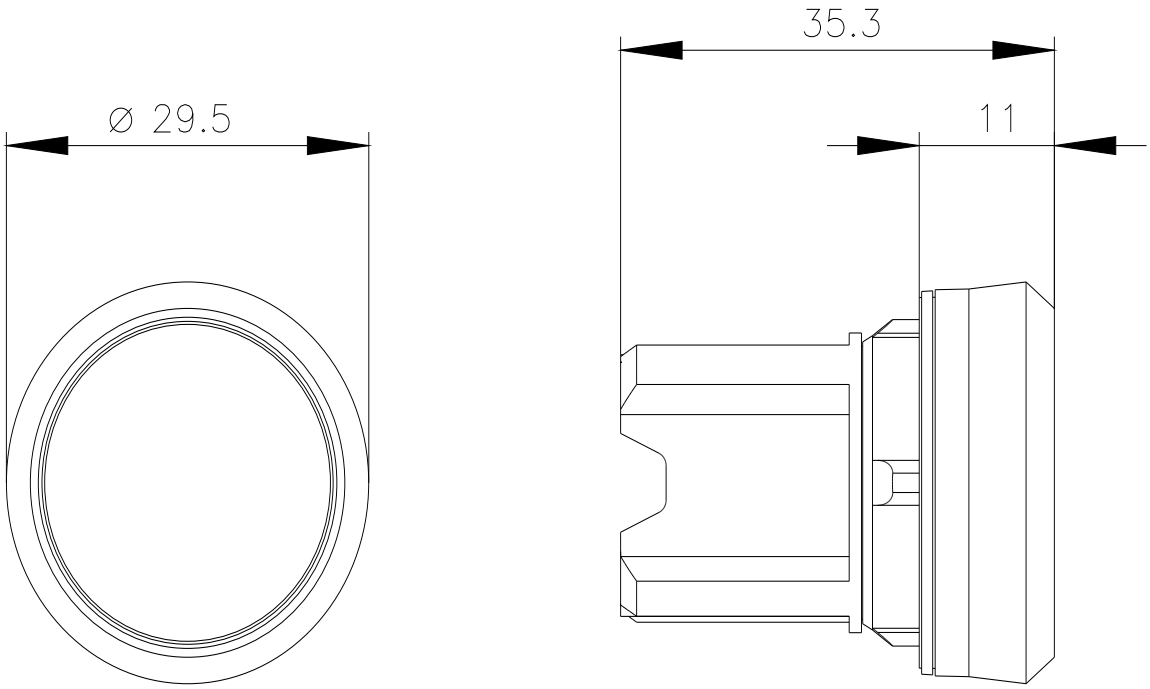

last modified: 2/6/2024

Subject to change without notice
© Copyright Siemens