SIEMENS

Data sheet US2:HNF364

Siemens Low Voltage Circuit Protection Heavy Duty Safety Switch. 3-Pole Non-Fused in a type 1 enclosure (indoor). Rated 600VAC (200A).

General technical data	
mechanical service life (operating cycles) typical	8000
fastening method	SURFACE
product function note	
number of poles	3
suitability for operation	DISCONNECTING MEAN FOR SERVICE ENTRANCE / LOADS
Electricity	
ampacity	200 A
supply voltage frequency rated value 50/60 Hz	Yes
Model	
product brand name	SIEMENS
product type designation	HEAVY DUTY SWITCH
type of electrical connection	MECHANICAL LUGS
Mechanical Design	
design of the housing	TYPE 1
design of the actuating element	SINGLE THROW
material	STEEL
General product approval	
certificate of suitability	UL98

Subject to change without notice
© Copyright Siemens

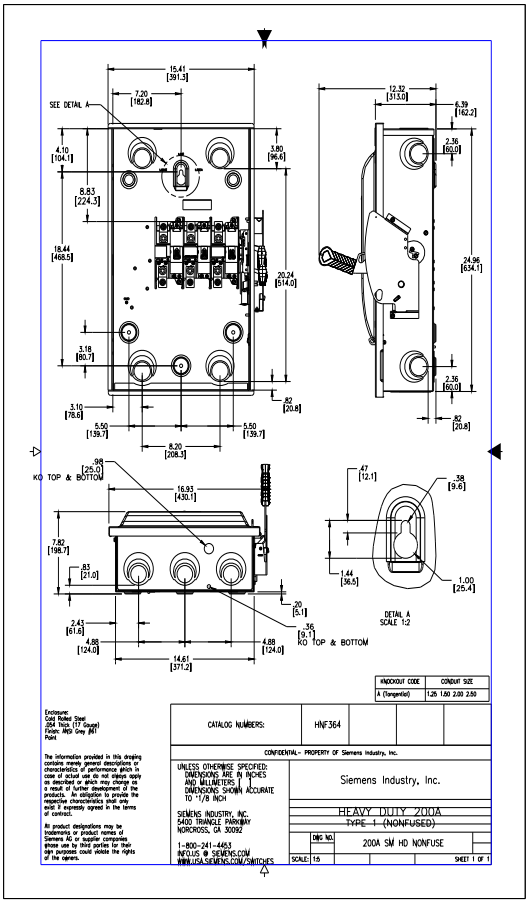

last modified: 9/16/2021

Subject to change without notice
© Copyright Siemens

Subject to change without notice
© Copyright Siemens