SIEMENS

Data sheet 3NE1436-0

Figure similar

SITOR fuse link, with blade contacts, NH3, In: 630 A, gS, Un AC: 690 V, Un DC: 440 V, front indicator

Model	
product brand name	SENTRON
product designation	SITOR fuse link
design of the product	with blade contacts without slots
design of an identification indicator	front indicator
design of the switching contact	with blade contacts for mounting in LV HRC fuse bases or switch disconnectors
design of the fuse link	SITOR, LV HRC design
General technical data	
size of fuse system according to EN 60269-1	NH3
operating class of the fuse link	gS
varying load factor (WL)	1
type of voltage of the operating voltage	AC/DC
operating voltage at AC according to UL rated value	690 V
Supply voltage	
supply voltage	
● at AC	690 V
● at DC	440 V
Breaking Capacity	
switching capacity current	
● according to IEC 60947-2 rated value	100 kA
Dissipation	
power loss [W]	55 W
power loss [W]	
● for rated value of the current at AC in hot operating state per pole	55 W
● maximum	55 W
Product details	
product description	with blade contacts, silver-plated
accessories included	no
Mechanical Design	
mounting position	Any, preferably vertical
Environmental conditions	
ambient temperature during operation	
● minimum	-20 °C
● maximum	50 °C
environmental category	-20 to +50 at 95% relative humidity
Approvals Certificates	

General Product Approval	Test Certificates	other

Subject to change without notice
© Copyright Siemens

				Special Test Certificate	Confirmation

other	Environment	
Miscellaneous	Environmental Confirmations	Environmental Confirmations

Further information

Information on the packaging
https://support.industry.siemens.com/cs/ww/en/view/109813875
Information- and Downloadcenter (Catalogs, Brochures,…)
http://www.siemens.com/lowvoltage/catalogs
Industry Mall (Online ordering system)
https://mall.industry.siemens.com/mall/en/en/Catalog/product?mlfb=3NE1436-0
Service&Support (Manuals, Certificates, Characteristics, FAQs,...)
https://support.industry.siemens.com/cs/ww/en/ps/3NE1436-0
Image database (product images, 2D dimension drawings, 3D models, device circuit diagrams, ...)
http://www.automation.siemens.com/bilddb/cax_en.aspx?mlfb=3NE1436-0
CAx-Online-Generator
http://www.siemens.com/cax
Tender specifications
http://www.siemens.com/specifications

Subject to change without notice
© Copyright Siemens

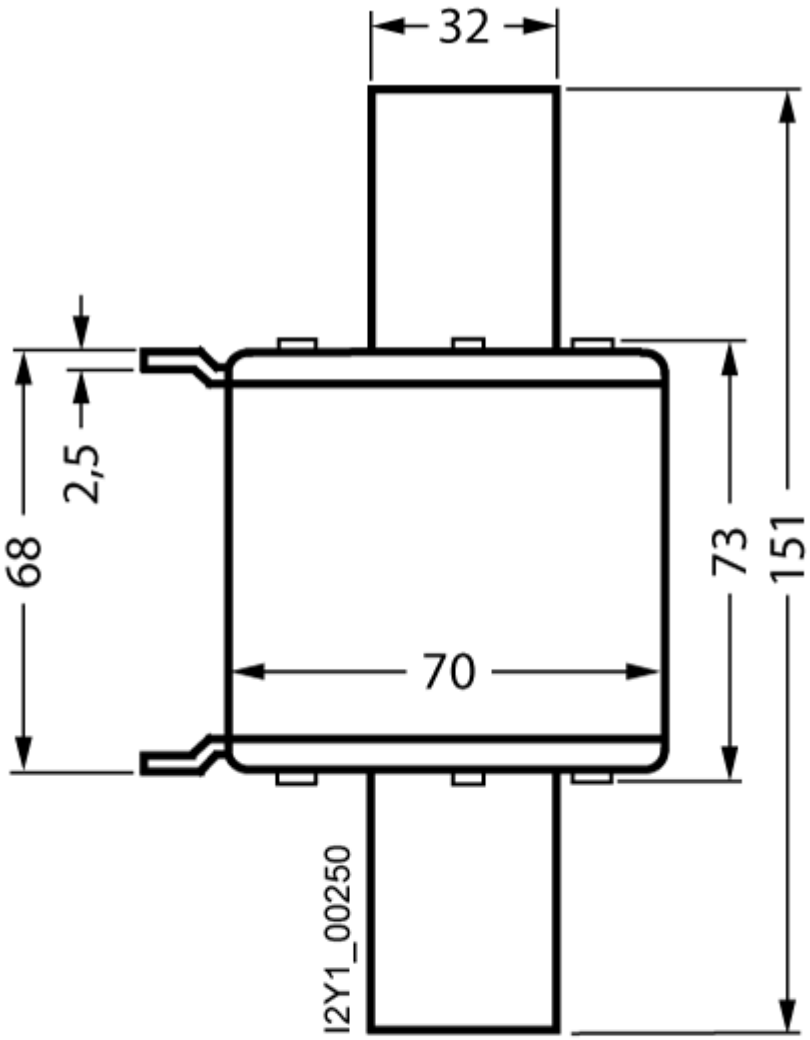

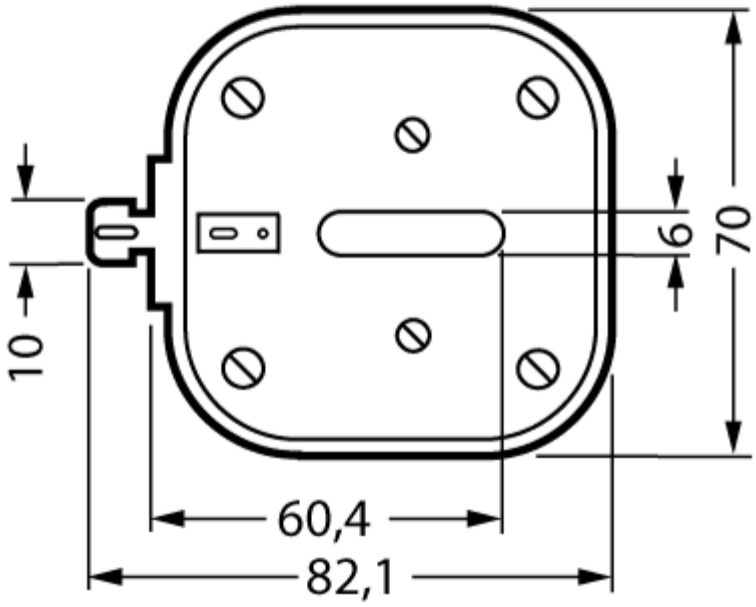

last modified: 4/4/2025

Subject to change without notice
© Copyright Siemens

Subject to change without notice
© Copyright Siemens