SIEMENS

Data sheet US2:HNF364R

Siemens Low Voltage Circuit Protection Heavy Duty Safety Switch. 3-Pole Non-Fused in a type 3R enclosure (outdoor). Rated 600VAC (200A).

General technical data	
mechanical service life (operating cycles) typical	8000
fastening method	SURFACE
product function note	
number of poles	3
suitability for operation	DISCONNECTING MEAN FOR SERVICE ENTRANCE / LOADS
Electricity	
ampacity	200 A
supply voltage frequency rated value 50/60 Hz	Yes
Model	
product brand name	SIEMENS
product type designation	HEAVY DUTY SWITCH
type of electrical connection	MECHANICAL LUGS
Mechanical Design	
design of the housing	TYPE 3R
design of the actuating element	SINGLE THROW
material	STEEL
General product approval	
certificate of suitability	UL98

Subject to change without notice
© Copyright Siemens

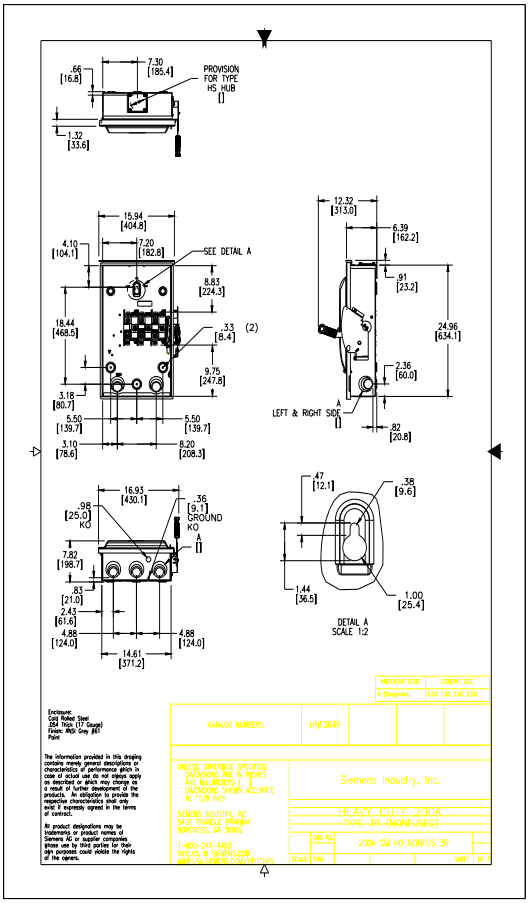

last modified: 10/22/2025

Subject to change without notice
© Copyright Siemens

Subject to change without notice
© Copyright Siemens