SIEMENS

Data sheet 3RV2411-0KA15

Siemens EcoTech

Circuit breaker size S00 for transformer protection A-release 0.9...1.25 A N-release 26 A screw terminal Standard switching capacity with transverse auxiliary switches 1 NO+1 NC

product brand name	SIRIUS
product designation	Circuit breaker
design of the product	For transformer protection
product type designation	3RV2
General technical data	
size of the circuit-breaker	S00
size of contactor can be combined company-specific	S00, S0
product extension auxiliary switch	Yes
power loss [W] for rated value of the current	
● at AC in hot operating state	7.25 W
● at AC in hot operating state per pole	2.4 W
insulation voltage with degree of pollution 3 at AC rated value	690 V
surge voltage resistance rated value	6 kV
shock resistance according to IEC 60068-2-27	25g / 11 ms
mechanical service life (operating cycles)	
● of the main contacts typical	100 000
● of auxiliary contacts typical	100 000
electrical endurance (operating cycles) typical	100 000
reference code according to IEC 81346-2	Q
Substance Prohibitance (Date)	10/01/2009
SVHC substance name	Lead - 7439-92-1
Ambient conditions	
installation altitude at height above sea level maximum	2 000 m
ambient temperature	
● during operation	-20 ... +60 °C
● during storage	-50 ... +80 °C
● during transport	-50 ... +80 °C
relative humidity during operation	10 ... 95 %
Main circuit	
number of poles for main current circuit	3
adjustable current response value current of the current-dependent overload release	0.9 ... 1.25 A
operating voltage	
● rated value	20 ... 690 V
● at AC-3 rated value maximum	690 V
● at AC-3e rated value maximum	690 V
operating frequency rated value	50 ... 60 Hz

Subject to change without notice
© Copyright Siemens

operational current rated value	1.25 A
operational current	
● at AC-3 at 400 V rated value	1.25 A
● at AC-3e at 400 V rated value	1.25 A
operating power	
● at AC-3	
— at 230 V rated value	0.2 kW
— at 400 V rated value	0.4 kW
— at 500 V rated value	0.4 kW
— at 690 V rated value	0.8 kW
● at AC-3e	
— at 230 V rated value	0.2 kW
— at 400 V rated value	0.4 kW
— at 500 V rated value	0.4 kW
— at 690 V rated value	0.8 kW
operating frequency	
● at AC-3 maximum	15 1/h
● at AC-3e maximum	15 1/h
Auxiliary circuit	
design of the auxiliary switch	transverse
number of NC contacts for auxiliary contacts	1
number of NO contacts for auxiliary contacts	1
number of CO contacts for auxiliary contacts	0
operational current of auxiliary contacts at AC-15	
● at 24 V	2 A
● at 120 V	0.5 A
● at 125 V	0.5 A
● at 230 V	0.5 A
operational current of auxiliary contacts at DC-13	
● at 24 V	1 A
● at 60 V	0.15 A
Protective and monitoring functions	
product function	
● ground fault detection	No
● phase failure detection	Yes
trip class	CLASS 10
design of the overload release	thermal
maximum short-circuit current breaking capacity (Icu)	
● at AC at 240 V rated value	100 kA
● at AC at 400 V rated value	100 kA
● at AC at 500 V rated value	100 kA
● at AC at 690 V rated value	100 kA
operating short-circuit current breaking capacity (Ics) at AC	
● at 240 V rated value	100 kA
● at 400 V rated value	100 kA
● at 500 V rated value	100 kA
● at 690 V rated value	100 kA
response value current of instantaneous short-circuit trip unit	26 A
UL/CSA ratings	
full-load current (FLA) for 3-phase AC motor	
● at 480 V rated value	1.25 A
● at 600 V rated value	1.25 A
yielded mechanical performance [hp]	
● for 3-phase AC motor	
— at 460/480 V rated value	1 hp
— at 575/600 V rated value	0.5 hp
contact rating of auxiliary contacts according to UL	C300 / R300
Short-circuit protection	
product function short circuit protection	Yes
design of the short-circuit trip	magnetic

Subject to change without notice
© Copyright Siemens

design of the fuse link	
● for short-circuit protection of the auxiliary switch required	Fuse gL/gG: 10 A, miniature circuit breaker C 6 A (short-circuit current Ik < 400 A)
design of the fuse link for IT network for short-circuit protection of the main circuit	
● at 500 V	gL/gG 16 A
● at 690 V	gL/gG 16 A
Installation/ mounting/ dimensions	
mounting position	any
fastening method	screw and snap-on mounting onto 35 mm DIN rail according to DIN EN 60715
height	97 mm
width	45 mm
depth	97 mm
required spacing	
● with side-by-side mounting at the side	0 mm
● for grounded parts at 400 V	
— downwards	30 mm
— upwards	30 mm
— at the side	9 mm
● for live parts at 400 V	
— downwards	30 mm
— upwards	30 mm
— at the side	9 mm
● for grounded parts at 500 V	
— downwards	30 mm
— upwards	30 mm
— at the side	9 mm
● for live parts at 500 V	
— downwards	30 mm
— upwards	30 mm
— at the side	9 mm
● for grounded parts at 690 V	
— downwards	50 mm
— upwards	50 mm
— backwards	0 mm
— at the side	30 mm
— forwards	0 mm
● for live parts at 690 V	
— downwards	50 mm
— upwards	50 mm
— backwards	0 mm
— at the side	30 mm
— forwards	0 mm
Connections/ Terminals	
type of electrical connection	
● for main current circuit	screw-type terminals
● for auxiliary and control circuit	screw-type terminals
arrangement of electrical connectors for main current circuit	Top and bottom
type of connectable conductor cross-sections	
● for main contacts	
— solid or stranded	2x (0,75 ... 2,5 mm²), 2x 4 mm²
— finely stranded with core end processing	2x (0.5 ... 1.5 mm²), 2x (0.75 ... 2.5 mm²)
● for AWG cables for main contacts	2x (18 ... 14), 2x 12
type of connectable conductor cross-sections	
● for auxiliary contacts	
— solid or stranded	2x (0.5 ... 1.5 mm²), 2x (0.75 ... 2.5 mm²)
— finely stranded with core end processing	2x (0.5 ... 1.5 mm²), 2x (0.75 ... 2.5 mm²)
● for AWG cables for auxiliary contacts	2x (20 ... 16), 2x (18 ... 14)
tightening torque	
● for main contacts with screw-type terminals	0.8 ... 1.2 N·m

Subject to change without notice
© Copyright Siemens

● for auxiliary contacts with screw-type terminals	0.8 ... 1.2 N·m
design of screwdriver shaft	Diameter 5 to 6 mm
size of the screwdriver tip	Pozidriv size 2
design of the thread of the connection screw	
● for main contacts	M3
● of the auxiliary and control contacts	M3
Safety related data	
product function suitable for safety function	Yes
suitability for use	
● safety-related switching on	No
● safety-related switching OFF	Yes
service life maximum	10 a
test wear-related service life necessary	Yes
proportion of dangerous failures	
● with low demand rate according to SN 31920	40 %
● with high demand rate according to SN 31920	50 %
B10 value with high demand rate according to SN 31920	5 000
failure rate [FIT] with low demand rate according to SN 31920	50 FIT
ISO 13849	
device type according to ISO 13849-1	3
overdimensioning according to ISO 13849-2 necessary	Yes
IEC 61508	
safety device type according to IEC 61508-2	Type A
T1 value	
● for proof test interval or service life according to IEC 61508	10 a
Electrical Safety	
protection class IP on the front according to IEC 60529	IP20
touch protection on the front according to IEC 60529	finger-safe, for vertical contact from the front
Display	
display version for switching status	Handle

Approvals Certificates

General Product Approval

Confirmation

Test Certificates

Special Test Certificate

Type Test Certificates/Test Report

Marine / Shipping

Marine / Shipping

other

Miscellaneous

Confirmation

Railway

Special Test Certificate

Railway

Confirmation

Environment

Subject to change without notice
© Copyright Siemens

Further information

Information on the packaging
https://support.industry.siemens.com/cs/ww/en/view/109813875
Information- and Downloadcenter (Catalogs, Brochures,…)
https://www.siemens.com/ic10
Industry Mall (Online ordering system)
https://mall.industry.siemens.com/mall/en/en/Catalog/product?mlfb=3RV2411-0KA15
Cax online generator
http://support.automation.siemens.com/WW/CAXorder/default.aspx?lang=en&mlfb=3RV2411-0KA15
Service&Support (Manuals, Certificates, Characteristics, FAQs,...)
https://support.industry.siemens.com/cs/ww/en/ps/3RV2411-0KA15
Image database (product images, 2D dimension drawings, 3D models, device circuit diagrams, EPLAN macros, ...)
http://www.automation.siemens.com/bilddb/cax_de.aspx?mlfb=3RV2411-0KA15&lang=en
Characteristic: Tripping characteristics, I²t, Let-through current
https://support.industry.siemens.com/cs/ww/en/ps/3RV2411-0KA15/char
Further characteristics (e.g. electrical endurance, switching frequency)
http://www.automation.siemens.com/bilddb/index.aspx?view=Search&mlfb=3RV2411-0KA15&objecttype=14&gridview=view1

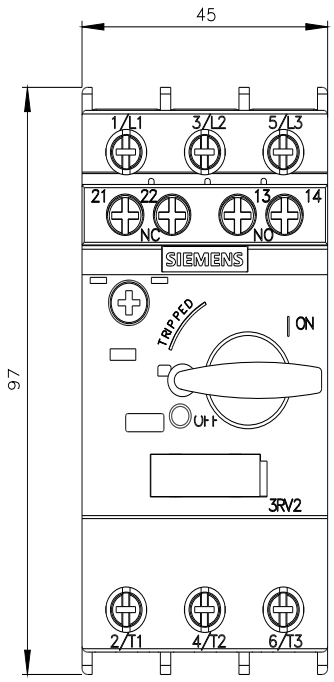

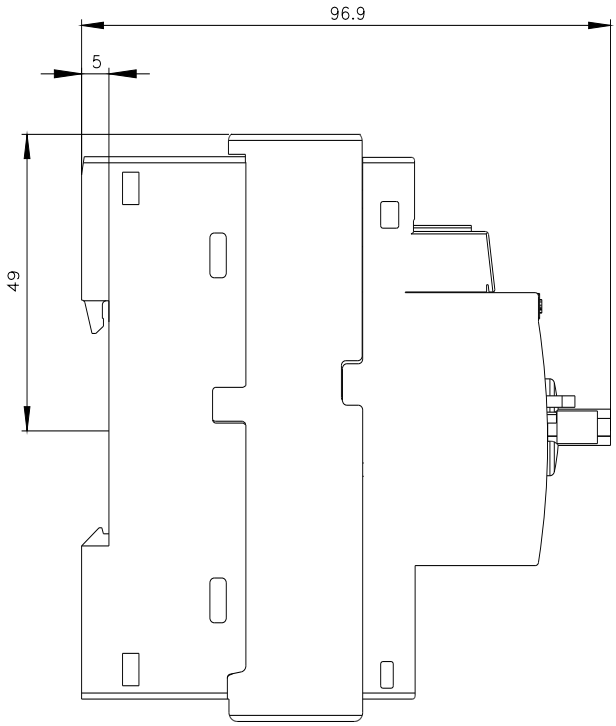

Subject to change without notice
© Copyright Siemens

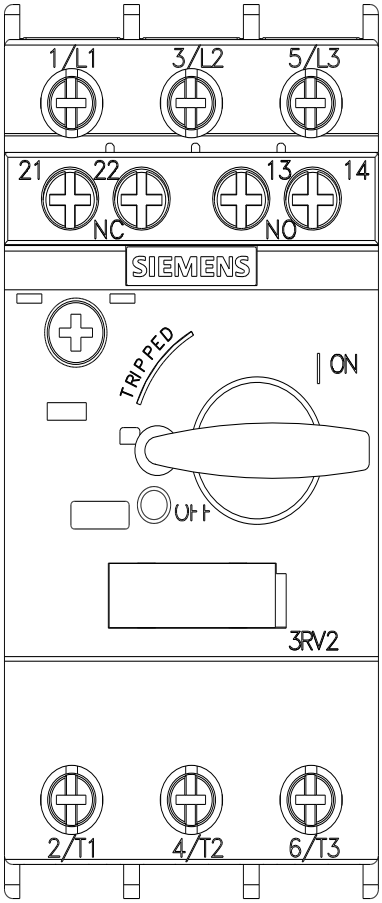

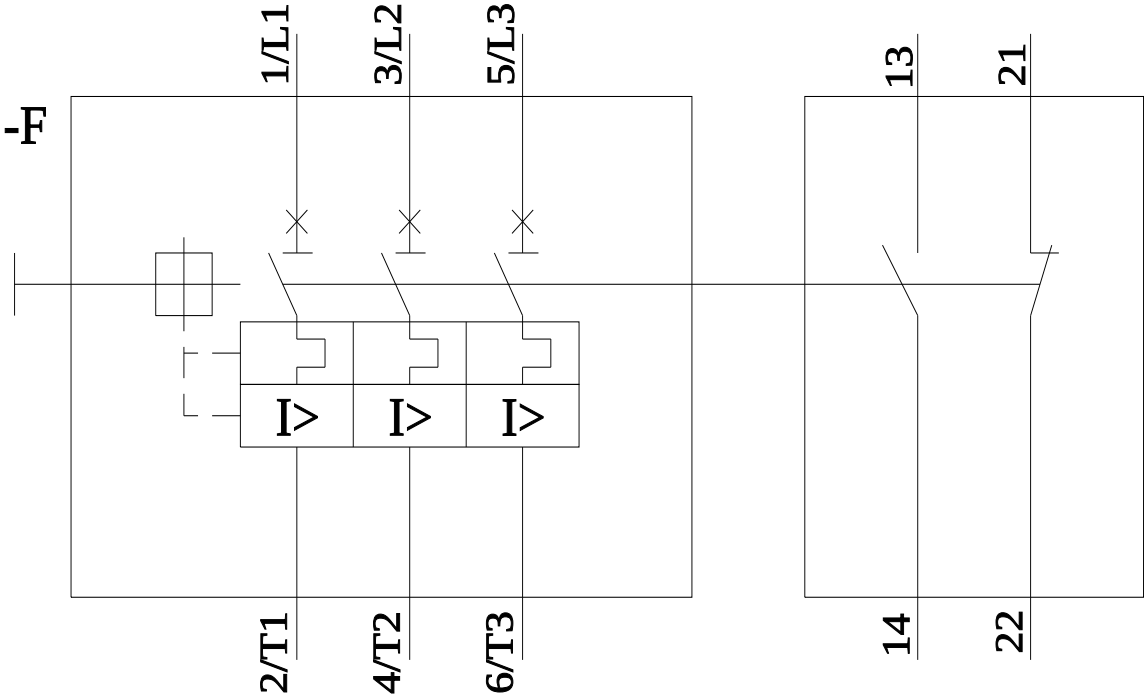

last modified: 4/12/2024

Subject to change without notice
© Copyright Siemens