SIEMENS

Data sheet 3SU1050-5KF01-0AA0

Siemens EcoTech

keyswitch Siemens, C, 22 mm, round, metal, shiny, lock number VL5, with 2 keys, 2 switch positions O-I, latching, actuating angle 90°, 10:30h/13:30h, key removal O

product brand name	SIRIUS ACT
product designation	Key-operated switches
design of the product	Actuating/signaling element
product type designation	3SU1
product line	Metal, shiny, 22 mm
manufacturer's article number of included key	3SU1950-0FQ80-0AA0
Actuator	
principle of operation of the actuating element	latching, 90° (10:30 h/13:30 h)
product extension optional light source	No
color	
● of the actuating element	silver
material of the actuating element	metal
shape of the actuating element	Key
outer diameter of the actuating element	29.5 mm
number of switching positions	2
switch position for key distraction	O
actuating angle	
● clockwise	90°
lock make	Siemens, C
key number	VL5
Front ring	
product component front ring	Yes
design of the front ring	Standard
material of the front ring	Metal, high gloss
color of the front ring	silver
General technical data	
protection class IP	IP66, IP67, IP69(IP69K)
degree of protection NEMA rating	1, 2, 3, 3R, 4, 4X, 12, 13
shock resistance	
● according to IEC 60068-2-27	sinusoidal half-wave 15g / 11 ms
vibration resistance	
● according to IEC 60068-2-6	10 ... 500 Hz: 5g
operating frequency maximum	1 800 1/h
mechanical service life (operating cycles) typical	300 000
reference code according to IEC 81346-2	S
Substance Prohibitance (Date)	10/01/2014
Weight	0.02 kg

Subject to change without notice
© Copyright Siemens

Ambient conditions	
ambient temperature	
● during operation	-25 ... +70 °C
● during storage	-40 ... +80 °C
environmental category during operation according to IEC 60721	3M6, 3S2, 3B2, 3C3, 3K6 (with relative air humidity of 10 ... 95%)

Environmental footprint	
Environmental Product Declaration(EPD)	Yes
Global Warming Potential [CO2 eq] total	0.593 kg
Global Warming Potential [CO2 eq] during manufacturing	0.625 kg
Global Warming Potential [CO2 eq] during operation	0.235 kg
Global Warming Potential [CO2 eq] after end of life	-0.267 kg
Siemens Eco Profile (SEP)	Siemens EcoTech

Installation/ mounting/ dimensions	
height	29.5 mm
width	29.5 mm
shape of the installation opening	round
mounting diameter	22.3 mm
positive tolerance of installation diameter	0.4 mm
mounting height	61 mm
installation width	29.5 mm
installation depth	25.4 mm

Approvals Certificates

General Product Approval	Test Certificates
Confirmation	Type Test Certificates/Test Report

Test Certificates	other	Environment
Special Test Certificate	Confirmation	Environmental Confirmations

Further information

Information on the packaging
https://support.industry.siemens.com/cs/ww/en/view/109813875
Information- and Downloadcenter (Catalogs, Brochures,…)
https://www.siemens.com/ic10
Industry Mall (Online ordering system)
https://mall.industry.siemens.com/mall/en/en/Catalog/product?mlfb=3SU1050-5KF01-0AA0
Cax online generator
http://support.automation.siemens.com/WW/CAXorder/default.aspx?lang=en&mlfb=3SU1050-5KF01-0AA0
Service&Support (Manuals, Certificates, Characteristics, FAQs,...)
https://support.industry.siemens.com/cs/ww/en/ps/3SU1050-5KF01-0AA0
Image database (product images, 2D dimension drawings, 3D models, device circuit diagrams, EPLAN macros, ...)
http://www.automation.siemens.com/bilddb/cax_de.aspx?mlfb=3SU1050-5KF01-0AA0&lang=en

Subject to change without notice
© Copyright Siemens

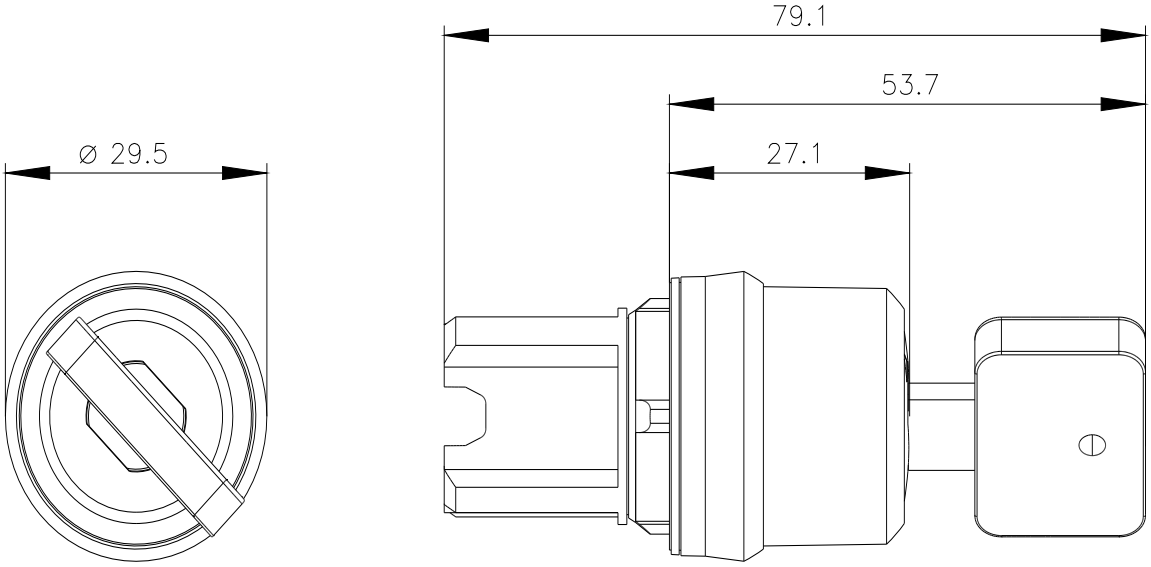

last modified: 9/12/2024

Subject to change without notice
© Copyright Siemens