Product Submittal	
Name	
Date	
Architect/Owner	
Contractor	
Tag	
Notes	

HoldRite® TRPVC2A thru TRPVC6A
Specification Sheet/Drawing

The TESTRITE® TEE installs in-line between DWV Pipe sections and allows the DWV line to be temporarily blocked for testing (available in 2" - 6"). The TESTRITE TEE includes a TEE and CLEANOUT PLUG which remains in the pipe system after test. It is designed to be used with the removable & reusable TESTRITE TEE WEDGE, which allows temporary blocking of the DWV stack for testing while providing connections for convenient system fill and drain. Drain flow may be interrupted, e.g., for partial tests, by opening and closing an integral valve in the TEST WEDGE. The TESTRITE TEE may be installed in drain, waste, or storm/rain water pipes, vertically or horizontally. They can be installed above or below grade in these systems within the respective pressure limitations by fitting size. Install as with any normal fitting. Follow manufacturer's instructions for testing. Remains in the system as a cleanout.

Product Information:

- Material:
  Cleanout Tee: PVC, White
  Cleanout Plug: NYLON 6/6
  Spanner Ring: NYLON 6/6, White
- Complies with ASTM-D2665
- Pressure ratings up to 50' head of water / 5 psi (air): 2" & 3" up to 50' head, 4" & 6" up to 40' head.
- UPC / IAPMO / IPC / cUPC (Canada) / UL
- Test device sold separately.
- Patents issued and Patents Pending
- Standard Cleanout Plug: Use with self-tapping screw (screw & cover by others)
  Optional Cleanout Plug: With installed 1/4"-20 brass insert. ("-B")

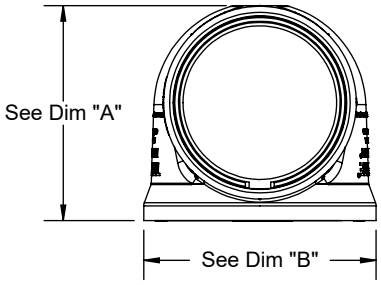

DIMENSION CHART				
Size	Dim "A"	Dim "B"	Dim "C"	Dim "D"
2"	3.38" (3-3/8")	Ø3.69" (3-11/16")	4.50" (4-1/2")	2.95" (3.0")
3"	4.61" (5-5/8")	Ø4.82" (4-13/16")	6.75" (6-3/4")	3.70" (3-45/64")
4"	5.59" (5-19/32")	Ø6.05" (6-1/16")	8.50" (8-1/2")	4.98" (5.0")
6"	7.63" (7-5/8")	Ø8.87" (8-7/8")	14.88" (14-7/8")	8.83" (8-13/16")

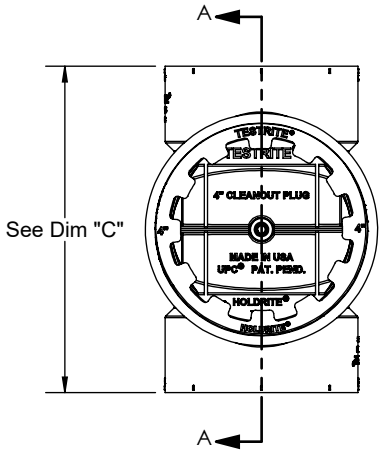

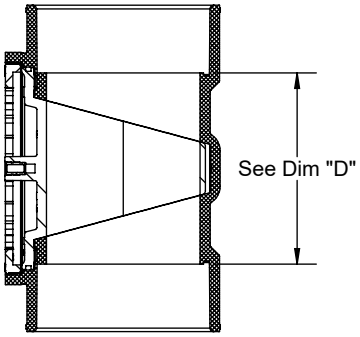

SECTION A-A

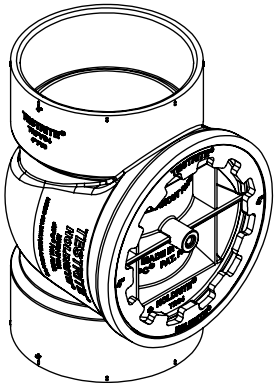

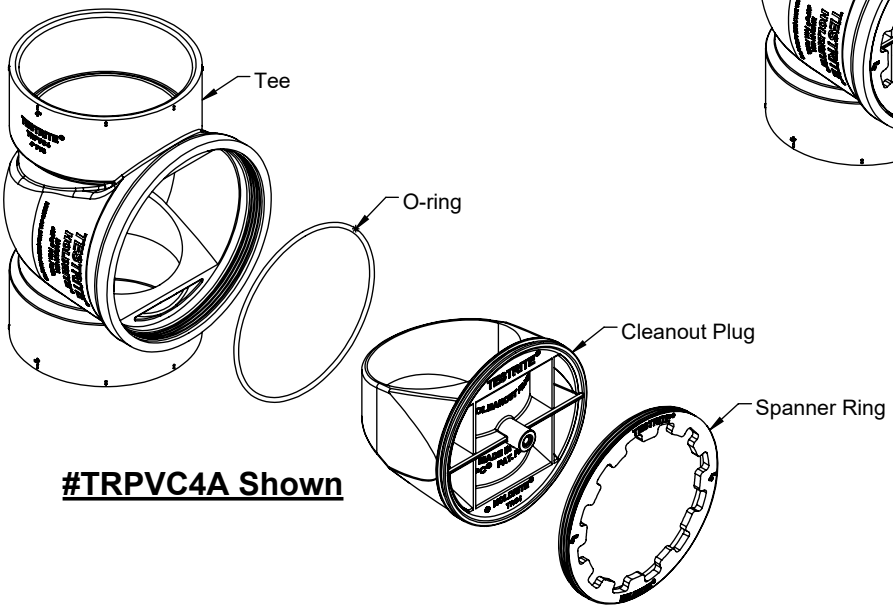

#TRPVC4A Shown