# PRODUCT SPECIFICATION DRAWING
# TESTRITE® #TRABS2A thru #TRABS4A
# Combination Test Tee & Cleanout Plug

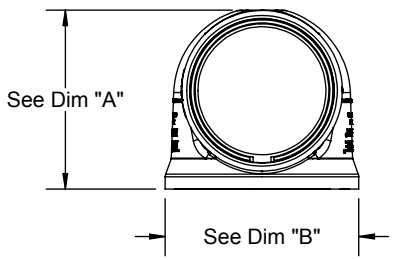


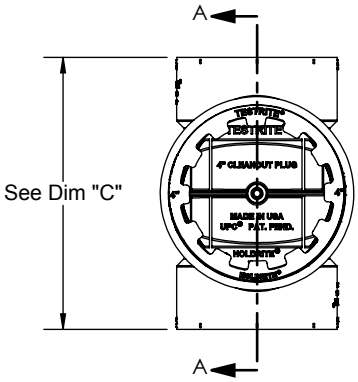


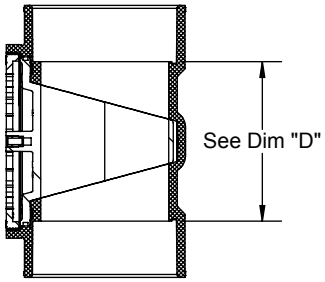


SECTION A-A

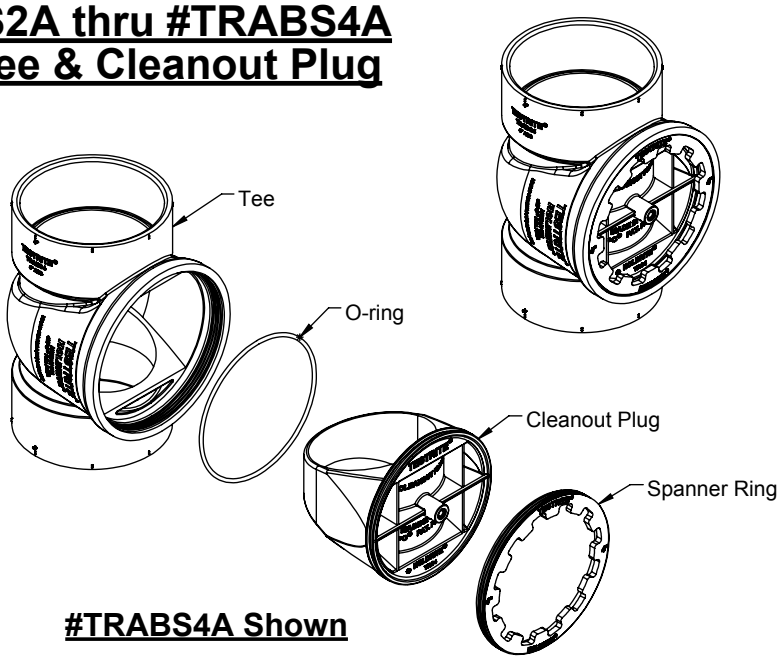


**#TRABS4A Shown**

The TESTRITE® TEE installs in-line between DWV Pipe sections and allows the DWV line to be temporarily blocked for testing (available in 2" - 4"). The TESTRITE TEE includes a TEE and CLEANOUT PLUG which remains in the pipe system after test. It is designed to be used with the removable & reusable TESTRITE TEST WEDGE, which allows temporary blocking of the DWV stack for testing while providing connections for convenient system fill and drain. Drain flow may be interrupted, e.g., for partial tests, by opening and closing an integral valve in the TEST WEDGE. The TESTRITE TEE may be used vertically or horizontally. Install as with any normal fitting. Follow manufacturer's instructions for testing. Remains in the system as a cleanout.

**Product Information:**

- Material:
  Cleanout Tee: ABS, Black
  Cleanout Plug: NYLON 6/6
  Spanner Ring: NYLON 6/6, Black
- Complies with ASTM-D2661
- Pressure ratings up to 50' head of water / 5 psi (air): 2" & 3" up to 50' head, 4" up to 40' head.
- UPC / IAPMO / IPC / cUPC (Canada) / UL
- Test device sold separately.
- Patents issued and Patents Pending
- Standard Cleanout Plug: Use with self-tapping screw (screw & cover by others)
  Optional Cleanout Plug: With installed 1/4"-20 brass insert. ("-B")

| DIMENSION CHART | | | | |
|---|---|---|---|---|
| Size | Dim "A" | Dim "B" | Dim "C" | Dim "D" |
| 2" | 3.38" (3-3/8") | Ø3.69" (3-11/16") | 4.50" (4-1/2") | 2.95" (3.0") |
| 3" | 4.61" (5-5/8") | Ø4.82" (4-13/16") | 6.75" (6-3/4") | 3.70" (3-45/64") |
| 4" | 5.59" (5-19/32") | Ø6.05" (6-1/16") | 8.50" (8-1/2") | 4.98" (5.0") |

| Product Submittal | |
|---|---|
| Job Name: | |
| Date: | |
| Part Number: | Qty: |
| | |
| | |
| Architect / Owner: | |
| | |
| Contractor: | |
| | |
| Notes: | |
| | |
| | |

THIS INFORMATION IS PROPRIETARY TO HOLDRITE AND IS SUBJECT TO CHANGE WITHOUT NOTICE. IT MAY NOT BE REPRODUCED IN PART OR WHOLE WITHOUT WRITTEN AUTHORIZATION.

HOLDRITE®
CONVERTING WAKESHIFT METHODS INTO ENGINEERED SOLUTIONS™

800-321-0316 OR 760-744-6944 / FAX: 760-744-0507 / WWW.HOLDRITE.COM