PRODUCT SPECIFICATION DRAWING
QUICK STAND™ #50-SWHP-W
Wall Mounted Equipment Platform

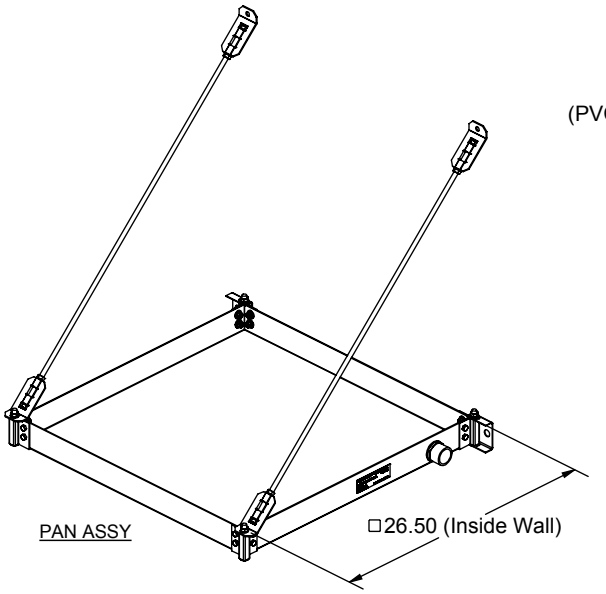

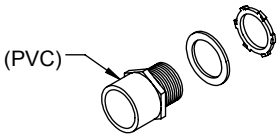

DRAIN BODY ASSY

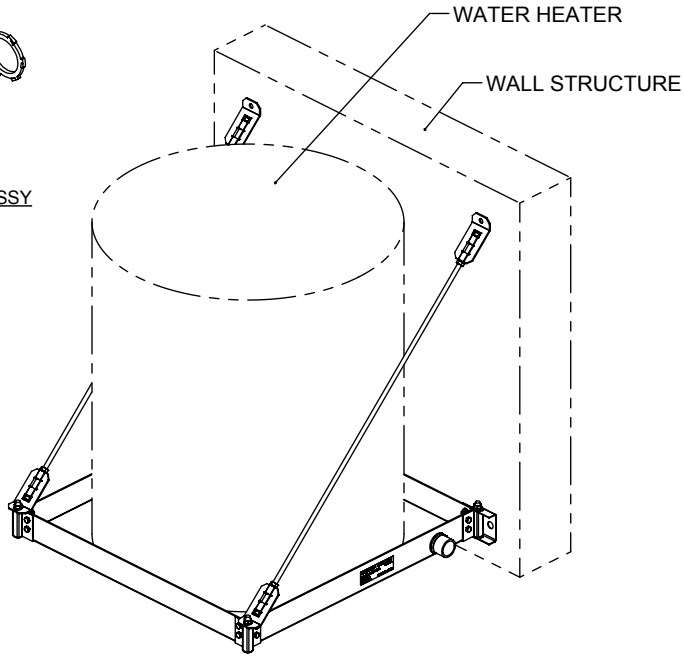

ALL DIMENSIONS IN INCHES

The Wall Mounted Equipment Platform is engineered to support water heaters up to 50 U.S. gallons (or other equipment up to 600 pounds total weight) mounted to a wall. This item also serves as a drain pan. See Installation Instructions for detail. See Installation Instructions for detail.

Product Information:

- Material:
  Pan: 12 gage CRS, galvanized
  Corner Brackets (4): 14 gage CRS, galvanized
  C-Brackets (2): 16 gage CRS, galvanized
  45° Brackets (4): 12 gage, CRS, galvanized
  Threaded Rod (2): Low carbon steel, zinc plated, 3/8" x 37.10" long
- Wide platform allows water heaters up to 26-1/2" diameter
- Watertight corners and drain fittings eliminate need for additional drain pan
- Static load rating 600 pounds with 2X safety factor (depending on structural anchorage)
- Professional Engineer stamped documentation available
- Includes PVC drain body 1" MIPT x 1" FS
- Galvanized steel construction
- Suspends with user supplied 3/8" hardware to mount to wall, 4 places
- Installation instructions for mounting to concrete or framed wall structure available
- Patent Pending

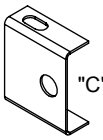

"C" Bracket, 2 places

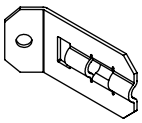

45° Bracket, 4 places

Product Submittal	
Job Name:	
Date:	
Part Number:	Qty:
Architect / Owner:	
Contractor:	
Notes:	

THIS INFORMATION IS PROPRIETARY TO HOLDRITE AND IS SUBJECT TO CHANGE WITHOUT NOTICE. IT MAY NOT BE REPRODUCED IN PART OR WHOLE WITHOUT WRITTEN AUTHORIZATION.

HOLDRITE®
CONVERTING MAKES LIFT METHODS INTO ENGINEERED SOLUTIONS™

800-321-0316 OR 760-744-6944 / FAX: 760-744-0507 / WWW.HOLDRITE.COM