PRODUCT SPECIFICATION DRAWING
PEXRITE® TURN-OUT #704

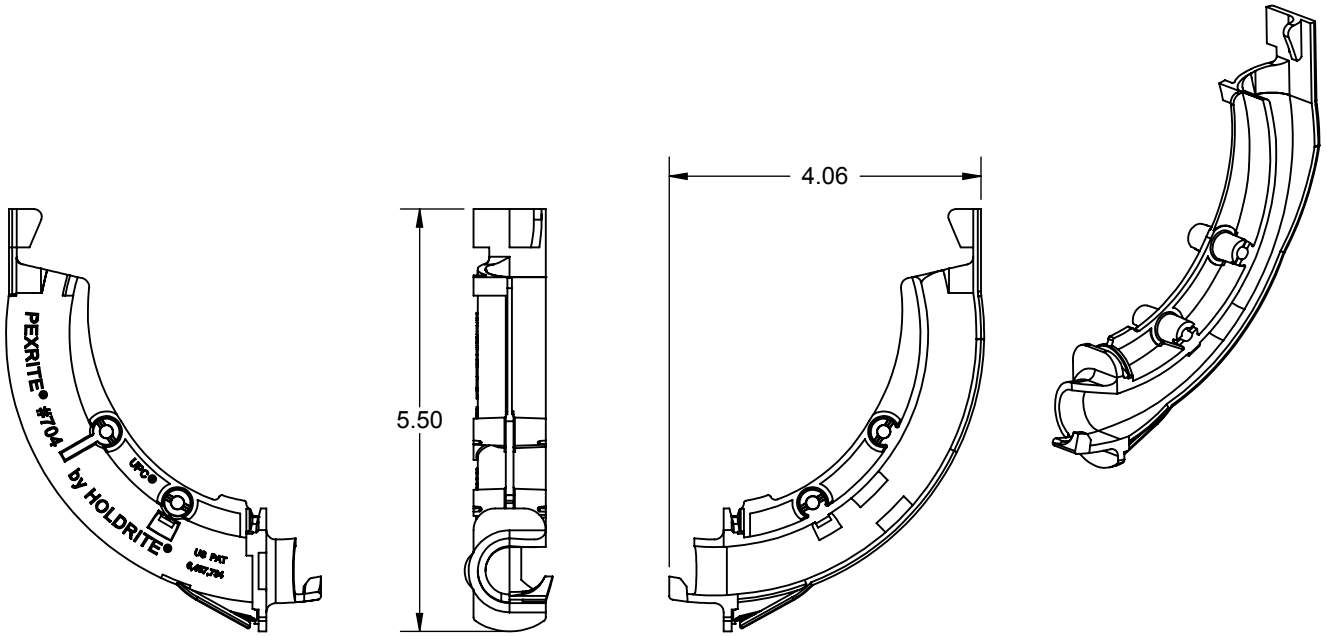

ALL DIMENSIONS IN INCHES

The PEXRITE® TURN-OUT #704. This bend support works with our PEXRITE® #103, #110-R, #709 and #721 series brackets or can be attached directly to framing. Supports either 3/8" or 1/2" PEX tubing. The PEXRITE® TURN-OUT #704 is for use with PEXRITE brackets only.

Product Information:

- Material: Nylon
- Temperature range: -10°F to +180°F
- Load rating: 25 pounds
- UPC / IPC / IAPMO listed

complies with IPC

Product Submittal	
Job Name:	
Date:	
Part Number:	Qty:
Architect / Owner:	
Contractor:	
Notes:	

THIS INFORMATION IS PROPRIETARY TO HOLDRITE AND IS SUBJECT TO CHANGE WITHOUT NOTICE. IT MAY NOT BE REPRODUCED IN PART OR WHOLE WITHOUT WRITTEN AUTHORIZATION.

HOLDRITE®

CONVERTING MAKESHIFT METHODS INTO ENGINEERED SOLUTIONS℠

800-321-0316 OR 760-744-6944 / FAX: 760-744-0507 / WWW.HOLDRITE.COM