# Product data sheet

Specifications

## Illuminated LED unit for modular tower lights, Harmony XVU, multi color, 60mm, steady blinking flashing rotating, IP65, 24V AC DC

XVUC29

**Product availability: Stock - Normally stocked in distribution facility**

## Main

| | |
|---|---|
| **Range of Product** | Harmony XVU |
| **Product or Component Type** | Modular tower light |
| **Beacon or indicator bank unit type** | LED unit |
| **Mounting diameter** | 2.4 in (60 mm) |
| **Component name** | XVU |
| **Light source** | LED, multi-colour |
| **Light source colour** | Green<br>Yellow<br>White<br>Blue<br>Amber<br>Red |
| **Device Application** | Automotive<br>Packaging machine<br>Machine tools |

## Complementary

| | |
|---|---|
| **Signalling type** | Steady<br>Rotating<br>Flashing<br>Blinking |
| **Assembly style** | Up to 4 units with buzzer<br>Customer assembly, up to 5 units |
| **Material** | PC (polycarbonate) V-2 UL 94<br>PC (polycarbonate) V-0 UL 94 |
| **[Us] Rated Supply Voltage** | 24 V AC/DC |
| **Maximum power dissipation in W** | 1.5 W |
| **Current consumption** | <= 70 mA |
| **Flashing frequency** | 1 Hz blinking<br>0.23 Hz slow flashing<br>7.26 Hz fast flashing<br>2.33 Hz slow rotating<br>3.3 Hz fast rotating |
| **Signalling type** | Steady/blinking/flashing/rotating |
| **Length** | 2.0 in (50 mm) |
| **Net Weight** | 0.141 lb(US) (0.064 kg) |

## Environment

Price is “List Price” and may be subject to a trade discount – check with your local distributor or retailer for actual price.

Disclaimer: This documentation is not intended as a substitute for and is not to be used for determining suitability or reliability of these products for specific user applications

| | |
|---|---|
| **Product Certifications** | CE<br>CSA<br>UL |
| **Ambient Air Temperature for Storage** | -40…158 °F (-40…70 °C) |
| **IP degree of protection** | IP65 |
| **Ambient Air Temperature for Operation** | -13…122 °F (-25…50 °C) |
| **Vibration resistance** | 2 gn |

## Ordering and shipping details

| | |
|---|---|
| **Category** | US100XV22618 |
| **Discount Schedule** | 00XV |
| **GTIN** | 3606480555862 |
| **Returnability** | Yes |
| **Country of origin** | ID |

## Packing Units

| | |
|---|---|
| **Unit Type of Package 1** | PCE |
| **Nbr. of units in pkg.** | 1 |
| **Package 1 Height** | 3.622 in (9.200 cm) |
| **Package 1 Width** | 3.661 in (9.300 cm) |
| **Package 1 Length** | 5.236 in (13.300 cm) |
| **Package weight(Lbs)** | 5.150 oz (146.000 g) |
| **Unit Type of Package 2** | S03 |
| **Number of Units in Package 2** | 24 |
| **Package 2 Height** | 11.811 in (30.000 cm) |
| **Package 2 Width** | 11.811 in (30.000 cm) |
| **Package 2 Length** | 15.748 in (40.000 cm) |
| **Package 2 Weight** | 9.568 lb(US) (4.340 kg) |
| **Unit Type of Package 3** | P06 |
| **Number of Units in Package 3** | 192 |
| **Package 3 Height** | 29.528 in (75.000 cm) |
| **Package 3 Width** | 23.622 in (60.000 cm) |
| **Package 3 Length** | 31.496 in (80.000 cm) |
| **Package 3 Weight** | 92.594 lb(US) (42.000 kg) |

## Environmental Data

Schneider Electric aims to achieve Net Zero status by 2050 through supply chain partnerships, lower impact materials, and circularity via our ongoing “Use Better, Use Longer, Use Again” campaign to extend product lifetimes and recyclability.

Environmental Data explained >

How we assess product sustainability >

### Environmental footprint

| | |
|---|---|
| Carbon footprint (kg CO2 eq, Total Life cycle) | 18 |
| Environmental Disclosure | Product Environmental Profile |

## Use Better

### Materials and Substances

| | |
|---|---|
| Packaging made with recycled cardboard | Yes |
| Packaging without single use plastic | Yes |
| EU RoHS Directive | Pro-active compliance (Product out of EU RoHS legal scope) |
| SCIP Number | C06fce4f-aea2-46a5-aadb-0b38d1efbe3f |
| REACh Regulation | REACh Declaration |
| California proposition 65 | WARNING: This product can expose you to chemicals including: Lead and lead compounds, which is known to the State of California to cause cancer and birth defects or other reproductive harm. For more information go to www.P65Warnings.ca.gov |

## Use Again

### Repack and remanufacture

| | |
|---|---|
| Circularity Profile | End of Life Information |
| Take-back | No |

Dimensions Drawings

## Illuminated LED Unit

### Dimensions

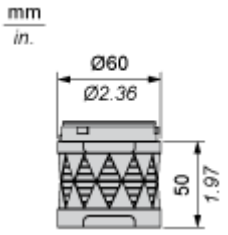

## Mounting and Clearance

### Modular Tower Lights Mounting

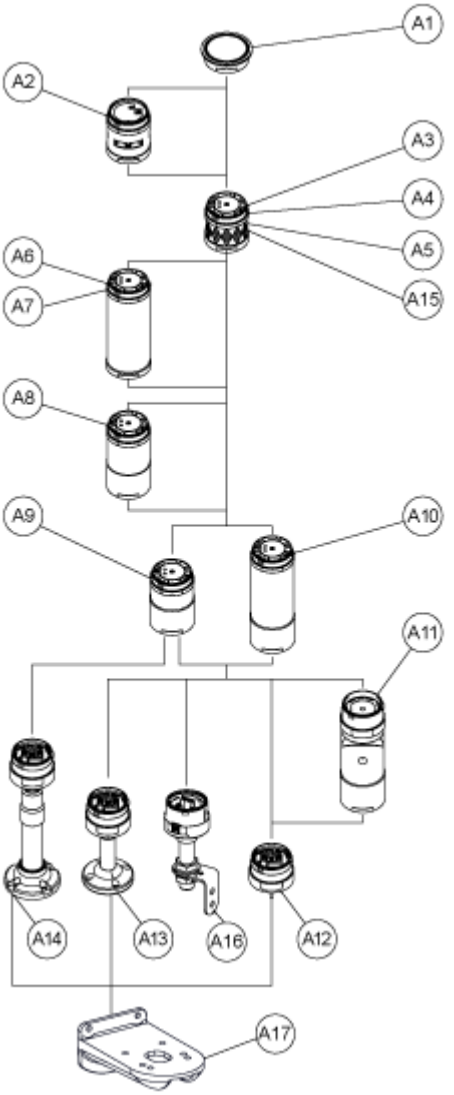


| Drawing | Part number | Part name |
|---|---|---|
| **A1** | - | Top cover |
| | - | Top cover (Silver) |
| **A2** | XVUC9S | Buzzer unit |
| | XVUC9SQ | Buzzer unit (Silver) |
| **A3** | XVUC23 | Green LED unit |
| | XVUC24 | Red LED unit |
| | XVUC25 | Orange LED unit |
| | XVUC26 | Blue LED unit |

| Drawing | Part number | Part name |
|---|---|---|
| | XVUC27 | White LED unit |
| | XVUC28 | Yellow LED unit |
| **A4** | XVUC29 | Multi-LED unit |
| **A5** | XVUC29P | Multi-LED unit, Pulse signal |
| **A6** | XVUC9V | Sound unit |
| **A7** | XVUC9VP | Sound unit, Pulse signal |
| **A8** | XVUC020 | Extender |
| | XVUC020Q | Extender (Silver) |
| **A9** | XVUC21B | DC body |
| | XVUC21BQ | DC body (Silver) |
| **A10** | XVUC21M | AC body NPN |
| | XVUC21MP | AC body PNP |
| | XVUC21MQP | AC body PNP (Silver) |
| **A11** | XVUZ06 | Flexible option |
| **A12** | XVUZ01 | Fixing Unit - Direct mounting (3 pins) |
| | XVUZ01Q | Fixing Unit - Direct mounting (Silver,3 pins) |
| | XVUZ03 | Fixing Unit - Direct mounting (2 pins) |
| | XVUZ04 | Fixing Unit - Direct mounting (4 pins) |
| **A13** | XVUZ02 | Fixing Unit - Plate with Pole (100 mm) |
| | XVUZ02Q | Fixing Unit - Plate with Pole (100 mm, Silver) |
| | XVUZ400 | Fixing Unit - Plate with Pole (400 mm) |
| | XVUZ800 | Fixing Unit - Plate with Pole (800 mm) |
| **A14** | XVUZ05 | Fixing Unit - Plate with adjustment pole (100-385 mm) |
| **A15** | XVUC43 | Green LED unit, Flash |
| | XVUC44 | Red LED unit, Flash |
| | XVUC45 | Orange LED unit, Flash |
| | XVUC46 | Blue LED unit, Flash |

| Drawing | Part number | Part name |
|---|---|---|
| | XVUC47 | White LED unit, Flash |
| | XVUC48 | Yellow LED unit, Flash |
| **A16** | XVUZ100T | Fixing Unit - Metal bracket with pole (100 mm) |
| | XVUZ250T | Fixing Unit - Metal bracket with pole(250 mm) |
| | XVUZ400T | Fixing Unit - Metal bracket with pole (400 mm) |
| **A17** | XVUZ12 | Fixing plate for use on vertical support - black |

## Connections and Schema

### Illuminated Units, Multi-LED and Audible Units Wiring

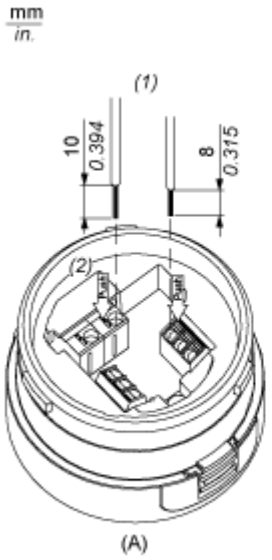


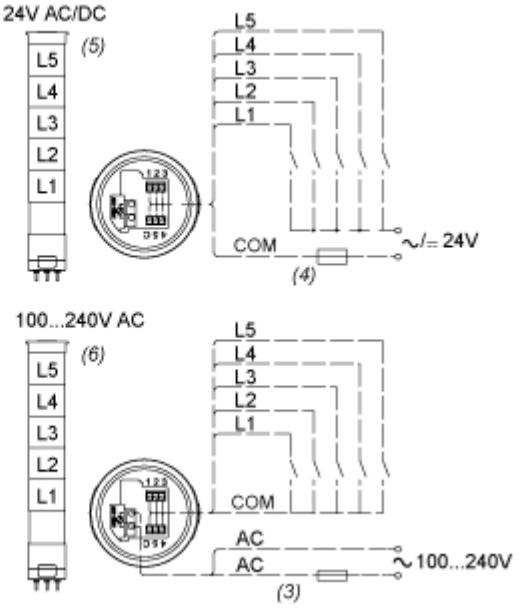


(A) Fixing Unit

(1) Dimensions of Wiring size

(2) Push-in Wire Connectors

(3) Fuse : 2A ,250V

(4) Fuse : 0.5A ,125V

(5) Modular Tower Lights 24V AC/DC

(6) Modular Tower Lights 100...240V AC

L1 to L5 : Illuminated LED Units

Technical Illustration

**Dimensions**

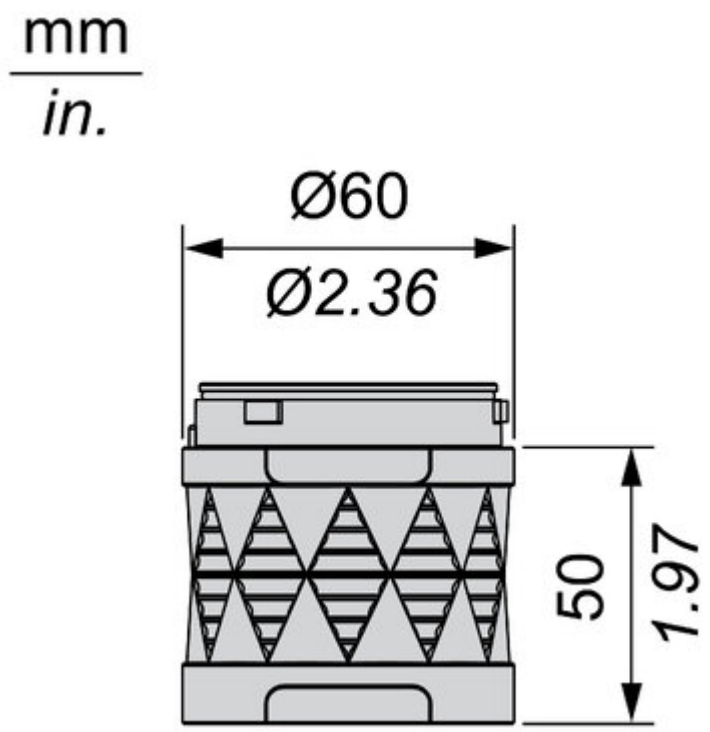

Technical Illustration

**Wiring diagram**

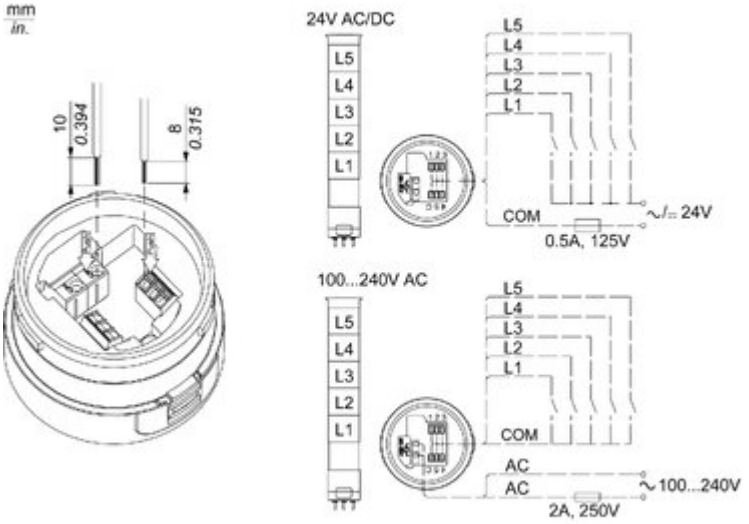

Offer Marketing Illustration

## Product benefits / Features