SQUARE D™

Product Overview

Square D™ Surgelogic™

Stand Alone Enclosed Surge Protective Devices (SPDs)

www.se.com

Schneider Electric™

Table of Contents

SPD Code Information 6
Commercial Facility Recommendations 7
Features and Benefits 8
Performance Testing 9
Quick Reference Guide 10
SDSA 12
SPDE 14
HWA 16
HWB 18
HWC 20
EMA 22
EMB 24
EMD 26
EML/HWL 28
EMA Stainless Steel 29
Service and Support 30
Circuit Breaker and Wire Ranges 31
Residential 32

Scan for Digital Guide

Get global and local expertise from Schneider Electric

Schneider Electric, a global leader in industrial technology, brings unparalleled expertise in electrification. The Square D™ Surgelogic™ brand surge protective devices (SPDs), available in both stand alone enclosed and integral panel mount, are top-tier, with industry-leading performance testing that showcases their ability to divert high-energy transient impulses. These SPDs have a proven track record of longevity and performance, hardening your facility's power system from the impact of surges.

Understanding the need

for a comprehensive surge protection plan for your facility.

Damage Due to Transients and Surges
Surges, transients, or spikes are terms used to describe momentary bursts of voltage and current lasting only millionths of a second. Typically, the largest surges enter through the main electrical supply and propagate through the distribution system, seeking a path of least resistance to the ground. Standard distribution equipment is not designed to mitigate the impact of surges. Protecting electrical systems from surges is achieved through the application of surge protective devices (SPDs).

Proven protection practices recommended by IEEE and mandated by the National Electrical Code (NEC®) involve installing hardwired SPDs at service entrance, distribution, and branch panel locations.

Service entrances are prone to the largest surges, often caused by lightning strikes on utility services. Distribution panels serving outside loads or connected to step-down transformers are susceptible to surges similar to those at service entrances or surges passing through transformers. Branch panels serving critical loads or essential electrical systems should be protected to eliminate residual surges impacting these panels.

Develop a Plan
The benefits of installing surge protective devices throughout a facility are clear:

- Reduced downtime
- Improved system and data reliability
- Elimination of damaged equipment due to surges

Stand Alone Enclosed Surge Protective Devices (SPDs)

Service Entrance

EMD
300kA
500kA
600kA
per phase

EMI/RFI Filter | Counter | Disconnect

HWC
300kA
per phase

EMI/RFI Filter | Counter

Distribution

EMA
100kA
200kA
per phase

Counter

EMB
200kA
per phase

EMI/RFI Filter

Branch Panels

HWA
100kA
per phase

EMI/RFI Filter

HWB
100kA
per phase

Basic

Point of Use

SPDE
50kA
per phase

Line - Neutral + Neutral - Ground

SDSA
50kA
per phase

Basic Line to Neutral Only

National Electrical Code (NEC®) Required Locations
Service & Feeder Panels for locations in Articles 230, 215, & 225
All Emergency Switchboard and Panelboards
Critical Operations Power Systems and Data Centers
Elevator/Escalator Disconnects
Industrial Safety Interlocks and Safety Circuits
SCADA System Power Supplies
Life Safety Branch Panels for Healthcare Facilities
IEEE Emerald Book Recommended Locations
Service Entrance
Distribution Panels
Branch Panels
Key Point of Use Locations
Uninterruptible Power Supplies (UPS)
Automatic Transfer Switches (ATS)
HVAC Equipment
Industrial Automation
Any copper conductor penetrating the structure

Recommended Sizing Practices for Typical Facilities: The 3, 2, 1 Rule of Thumb	
300kA/Phase	Service Entrance
200kA/Phase	Distribution Panels
100kA/Phase	Branch Panels
50kA/Phase	Key Point of Use

Recommendations for Facility Protection

Large Service Example

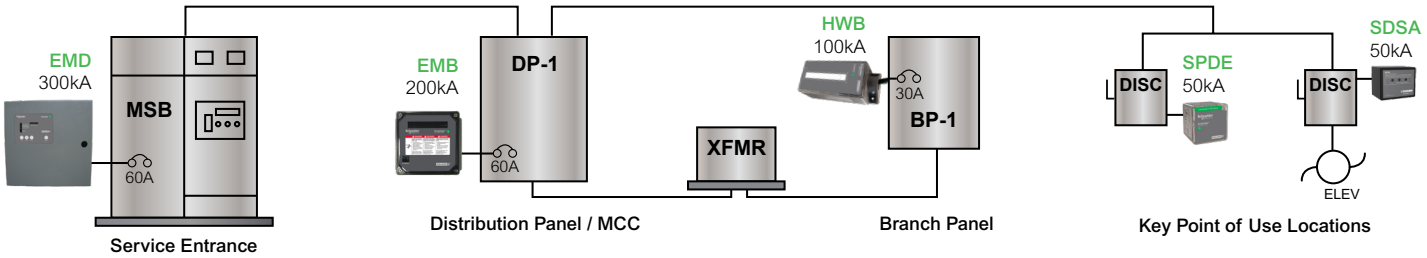

Medium Service Example

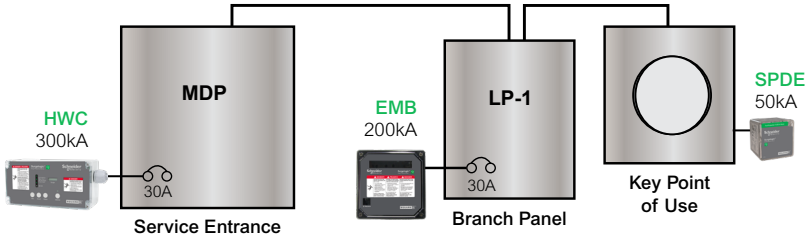

*Square D offers DIN-Rail devices if a control cabinet is the optimal location.

Emergency Service Example

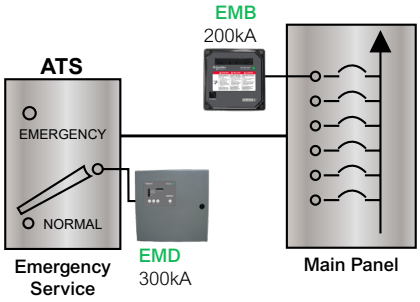

Small Service Example

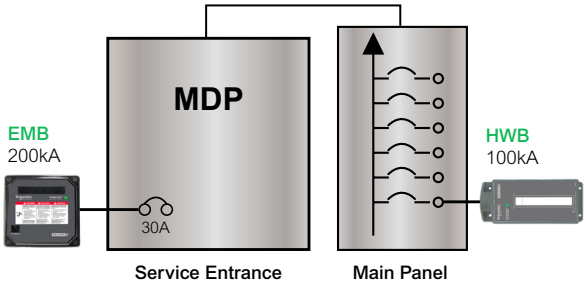

Key Point of Use Applications

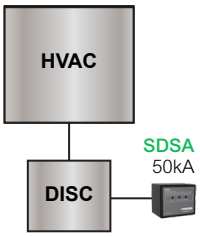

Residential Service

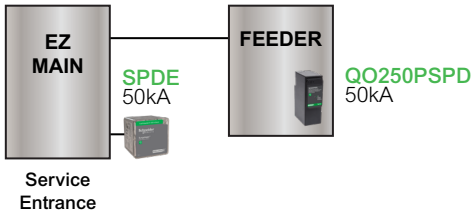

Square D™ Surgelogic™ brand SPDs are available integral mounted within panelboards.
Consult your local Schneider Electric representative for help selecting the right devices for your application.

Available Features and Benefits

Square D™ Surgelogic™ surge protective devices (SPDs) incorporate individually fused and thermally protected metal oxide varistors (MOVs). This feature provides superior withstand capability for systems with unstable power, without compromising transient clamping performance. The component level fusing and thermal protection also allows the surge protector to be directly connected to the electrical bus without external overcurrent protection.

When connecting via a breaker, which acts as a service disconnect, consult local electrical codes to select the appropriate size based upon the wire gauge to be used. Factory recommendations listed are based upon National Electrical Code (NEC®).

Warranty

Square D™ Surgelogic™ SPDs have a standard 10-year limited warranty (except SDSA with 2 Year Limited Warranty). Extended Warranties are available. Contact your local Schneider Electric representative for additional information.

Available Features	Advantages	Benefits
Performance Testing	Performance testing verifies the specified device works as intended with proven and documented results.	The design has been tested and shown to be capable of performing to defined specifications.
UL/NEMA 4X Enclosures	Allows installation in outdoor applications.	Provides surge suppression to vulnerable equipment powered from weather-exposed panels.
Individually Fused and Thermally Protected MOVs	Component level fusing and thermal protection of the metal oxide varistors (MOVs).	Provides premium surge suppression while managing both thermal and overcurrent end-of-life events. Can be direct bus connected without external overcurrent protection.
Internal Disconnect Switch	Localized removal of voltage.	Allows unit to be disconnected from electrical voltage if device service is required.
Surge Event Counter	Provide visual indication of surge events.	Assurance that installed device is clamping and logging surge events.
LED Status Indication	Allows visual indication of the suppressor's status.	Provides immediate response if suppressor is damaged.
Audible Alarm Dry Contacts	Provides audible indication and changed relay state of failed components.	Immediate notification through audible alarm, and remote signaling via dry contacts, if reduced suppression occurs.
Enhanced EMI/RFI Noise Attenuation	Premium noise attenuation.	Improved performance with added UL 1283 filtering components.
Push to Test Button	Toggles red service LED, audible alarm and dry contact to verfiy operation.	Allows user to verify the operational status of the installed device.

Performance Testing

Why Performance Testing?

By definition, an SPD is a protective device for limiting transient voltages by diverting or limiting surge current. It also prevents continued flow of follow current and must remain capable of repeating these functions.

The best way to verify performance is through rigorous testing which will demonstrate the following:

- Unit can perform as designed
- Verify device will function at it's stated surge current rating
- Demonstrate it's ability to repeat these functions
- Show noise attenuation per MIL-STD 220C methodology
- Verify clamping voltage at various waveform events
- Prove the device will remain in service and operational over time

Performance Testing Standards:

- Single Impulse (Maximum Surge Current)
  - per *NEMA SPD 1.1.2019 section 3.3.8*
- Repetitive Impulse (Endurance Testing)
- Insertion Loss (EMI/RFI Noise Attenuation)
- IEEE Waveform Let Through Voltage (Clamping Voltage)
  - Category A3 Ringwave
  - Category B3 Ringwave
  - Category B3 Combination Wave
  - Category B3 High /C1 Low Combination Wave
  - Category C3 High Combination Wave

Quick Reference Guide

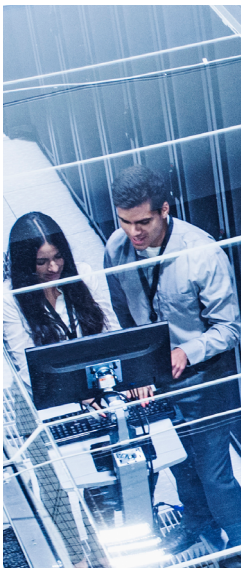

Schneider Electric has a comprehensive offering of surge protective devices (SPDs) for full facility protection.

Square D™ Surgelogic™ Standards and Performance

- UL1449 Fifth Edition Listed
- Enhanced EMI/RFI noise attenuation with UL 1283 filter components (where noted)
- ANSI/IEEE C62.41.1-2002, C62.41.2-2002, C62.45-2002, C62.62-2010, C62.72-2016, IEEE SA 1100-2005
- NEMA SPD 1.1-2019 Section 3.3.8 Performance Testing for most models
- NEC® Articles 242, 620.51(E), 645.18, 670.6, 695.15, 700.8 and 708 requiring SPDs
- Devices available to meet NFPA 780 Lightning Protection Systems requirements for UL 96A Master Label.

Discrete Line to Line SPD offer: Page 28

Stainless Steel SPD offer: Page 29

	SURGE ARRESTER		HARD WIRED			EXTERNAL MOUNT		
	SDSA	SPDE	HWA	HWB	HWC	EMA	EMB	EMD
Previous Series		420		425	440		XDSE	460 / 480
Enclosure Type	UL/NEMA 4X Polycarb	UL/NEMA 4X Polycarb	UL/NEMA 4X Polycarb	UL/NEMA 4X Polycarb	UL/NEMA 4X Polycarb	UL/NEMA 1 Steel	UL/NEMA 4X Polycarb	UL/NEMA 4 Steel
Per Phase Minimum	36kA (1Ø)	50kA	100kA	100kA	300kA	100kA	200kA	300kA
Per Phase Maximum	50kA (3Ø)	50kA	100kA	100kA	300kA	200kA	200kA	600kA
Modes of Protection	3	4	ALL	ALL	ALL	ALL	ALL	ALL
LED Status Indicators	✓	1	✓	✓	✓	✓	✓	✓
Alarm & Dry Contacts		Optional	✓	✓	✓	✓	✓	✓
Flush Mount Kit Option			✓	✓	✓	✓	✓	
EMI/RFI Noise Attenuation	✓	✓	✓	✓	✓	✓	✓	✓
Enhanced EMI/RFI Noise Attenuation			✓		✓		✓	✓
Surge Event Counter					✓	✓		✓
Integral Disconnect								✓
Performance Testing		✓	✓	✓	✓	✓	✓	✓
Replaceable Module(s)						✓		✓

SDSA Catalog Numbers

Voltage	SDSA
120V 1Ø, 3W+G	SDSA1175T (36kA)
120/240V 1Ø, 3W+G	SDSA1175 (36kA)
208Y/120V Wye	SDSA2040
240V Delta, 3Ø 3W+G	SDSA2040D
240/120V Delta High Leg, 3Ø 4W+G	SDSA2040D
480Y/277V 3Ø 4W+G	SDSA4040
480V Delta, 3Ø 3W+G	SDSA4040D
600Y/347V 3Ø 4W+G	SDSA3650
600V Delta, 3Ø 3W+G	SDSA3650D
Dimensions	3.0 x 3.4 x 2.6 in. (76 x 86 x 67 mm.)
Weight	1.6 lbs. (0.74 kg.)
Wire Size	14 AWG, 24 in. (0.61 m.)

SPDE Catalog Numbers

Voltage	SPDE	SPDE with audible alarm and dry contacts
120V 1Ø, 3W+G	SPDE0	SPDE0A
120/240V 1Ø, 3W+G	SPDE1	SPDE1A
208Y/120V Wye	SPDE2	SPDE2A
240V Delta, 3Ø 3W+G	-	SPDE6A
240/120V Delta High Leg, 3Ø 4W+G	-	SPDE3A
480Y/277V 3Ø 4W+G	SPDE4	SPDE4A
480V Delta, 3Ø 3W+G	-	SPDE5A
600Y/347V 3Ø 4W+G	-	SPDE8A
600V Delta, 3Ø 3W+G	-	SPDE9A
Dimensions	3.3 x 3.3 x 3.4 in.(84 x 84 x 86 mm.)	
Weight	1.6 lbs. (0.74 kg.)	
Wire Size	10 AWG 36 in. (0.91 m.)	18 AWG 36 in. (0.91m.) relay wires

Connection	Monitoring	kA Rating Per Phase	Catalog Number	Enclosure Dimensions	Weight
HWA					
Wire Leads (10 AWG)	LEDs, Alarm, Dry Contact, NEMA 4X Polycarbonate	100kA	HWA□1	8.62 x 4.8 x 2.92 in. (219 x 122 x 74 mm.)	5 lbs. (2.3 kg.)
HWB					
Wire Leads (10 AWG)	LEDs, Alarm, Dry Contacts NEMA 4X Polycarbonate	100kA	HWB□1	8.3 x 3.6 x 3.0 in. (211 x 91 x77 mm.)	3 lbs. (1.4 kg.)
HWC					
Wire Leads (10 AWG)	Counter, LEDs, Alarm, Dry Contacts NEMA 4X Polycarbonate	300kA	HWC□3	9.6 x 4.9 x 4.0 in. (244 x 124 x 102 mm.)	4.5 lbs. (2.1 kg.)
EMA					
Lugs (10 - 2 AWG)	Counter, LEDs, Alarm, Dry Contacts NEMA 1 Metal	100kA	EMA□1	11.0 x 12.0 x 5.4 in. (280 x 305 x 135 mm.)	23 lbs. (10.4 kg.)
		200kA	EMA□2		
EMB					
Lugs (14 - 8 AWG)	LEDs, Alarm, Dry Contacts NEMA 4X Polycarbonate	200kA	EMB□2 (Type 1) EMB□2F (Type 2)	6.0 x 6.0 x 4.0 in. (152 x 152 x 102 mm.)	5 lbs. (2.3 kg.)
EMD					
Internal Disconnect (8 AWG - 1/0)	Counter, LEDs, Alarm, Dry Contacts (2 sets) NEMA 4 Metal	300kA	EMD□3 (Type 1) EMD□3F (Type 2)	12 x 12 x 7 in. (305 x 305 x 178 mm.)	23 lbs. (10.4 kg.)
		500kA	EMD25	16 x 14 x 7 in. (406 x 406 x 178 mm.)	32 lbs. (14.5 kg.)
			EMD45		
			EMD55		
		600kA	EMD26	20 x 20 x 7.5 in. (508 x 508 x 190 mm.)	52 lbs. (23.6 kg.)
			EMD46		

Voltage Codes

120/240V Split Phase, 1Ø, 3W + ground	1
208Y/120V & 220Y/127 Wye, 3Ø 4W + ground	2
240/120V Delta High Leg, 3Ø 4W + ground	3
480Y/277V, 380Y/220V, 400Y/230V & 415Y/240V, 3Ø 4W + ground	4
480V Delta & HRG, 3Ø 3W + ground	5
240V Delta, 3Ø 3W + ground	6
600Y/347V Wye, 3Ø 4W + ground	8
600V Delta & HRG, 3Ø 3W + ground	9

- *Not all voltage and kA rating combinations may be available.*
- *"F" suffix for EMB and EMD models includes UL 1283 enhanced EMI/RFI noise attenuation.*

Flush Mount Kits

HWA	HWAFM
HWB	HWBFM
HWC	HWCFM
EMA	EMAFM
EMB	EMBFM

Remote Monitor

TVS12RMU

Square D™ Surgelogic™ Surge Arrester

SDSA

Square D™ Surgelogic™ SDSA Series Surge Protective Devices (SPDs) provide robust surge suppression in a rugged UL/NEMA 4X rated enclosure suitable for installing indoor, outdoor or other harsh environments.

The compact design of the SDSA allows surge suppression to be externally installed adjacent to electrical panels or disconnects, and internal to industrial control panels or other critical equipment. These devices are designed to provide high-quality surge suppression for a wide variety of commercial, industrial or institutional applications.

Square D™ Surgelogic™ SDSA Series SPDs utilize a high-energy parallel design that provides direct Line to Neutral suppression at 50kA of surge current rating per phase for three phase devices and 36kA for single phase devices. They contain a suppression circuit that provides robust, cost effective transient protection.

Voltage	Surge Current Rating	Catalog Numbers	UL 1449 Test Data			
			Voltage Protection Ratings (VPR)		SCCR Withstand	MCOV
			L-N	L-L		
120V, 1Ø, 2W+G, Single Pole [1][8]	36kA	SDSA1175T	700	-	25,000A	150
120/240V, 1Ø, 3W+G, Split [2][8]	36kA	SDSA1175	700	1200	25,000A	150
208Y/120V, 3Ø, 4W+G, Wye [3][8]	50kA	SDSA2040	700	1200	200,000A	180
240V, 3Ø, 3W+G, Delta [4]	50kA	SDSA2040D	-	1200	200,000A	360
480Y/277V, 3Ø, 4W+G, Wye [5][8]	50kA	SDSA4040	1500	2500	200,000A	420
480V, 3Ø, 3W+G, Delta [6]	50kA	SDSA4040D	-	2500	200,000A	840
600Y/347V, 3Ø, 4W+G, Wye [8]	50kA	SDSA3650	1800	3000	200,000A	510
600V, 3Ø, 3W+G, Delta [7]	50kA	SDSA3650D	-	3000	200,000A	1020

[1] 120V series also applies to the following voltage 127V
[2] 120/240V series also applies to the following voltage 127/254V
[3] 208Y/120V series also applies to the following voltage 220Y/127V
[4] 240V Delta series also applies to the following voltage 240/120V High-Leg Delta
[5] 480Y/277V series also applies to the following voltages 380Y/220V, 400Y/230V and 415Y/240V
[6] 480V Delta series also applies to the following voltage 480Y/277V HRG
[7] 600V Delta series also applies to the following voltage 600Y/347V HRG
[8] Do not use on ungrounded systems. Systems must be solidly grounded.

Specifications

SDSA Series SPDs		
Performance	**1Ø**	**3Ø**
Surge Current Rating per Phase	36kA	50kA
Nominal Discharge Current (I_n)	10kA	
Short Circuit Current Rating Withstand	25,000A	200,000A
Modes of Protection	Line to Neutral Line to Line (Delta Systems)	
Suppression Technology	Individually Fused MOVs	
Thermal & Overcurrent Protection	Yes	
Operating Frequency	50/60 Hz	
Mechanical Description	**1Ø**	**3Ø**
Enclosure	Non-Metallic	
NEMA Ratings	NEMA 4X	
Mounting Methods	1/2 in. Nipple Mount	
Circuit Type	Parallel	
Lead Wires	14 AWG, 2 feet (0.61 meters)	
Operating Altitude	Sea Level-12,000' (3,658 m)	
Storage Temperature	-31° F (-35° C) to 176° F (80° C)	
Operating Temperature	-31° F (-35° C) to 176° F (80° C)	
Operating Humidity	0 to 95% non-condensing	
Dimensions	2.25 x 2.25 x 2.0 in. (57 x 57 x 51 mm.)	3.0 x 3.6 x 3.4 in. (76 x 91.5 x 86 mm.)
Weight	0.72 lbs. (0.33 kg.)	1.63 lbs. (0.74 kg.)

Flexible Installation

SDSA SPDs are hard wired into the panel via the included wire leads. This allows easy mounting for direct bus connection or into a nearby circuit breaker for minimum lead length which maximizes device performance.

Listings and Performance

- Type 1: UL 1449 5th Edition, CSA 22.2 No. 269.1

Square D™ Surgelogic™ Surge Arrester

SPDE

Square D™ Surgelogic™ SPDE Series Surge Protective Devices (SPDs) provide robust surge suppression in a rugged UL/NEMA 4X rated enclosure suitable for installing indoors, outdoors or in other harsh environments.

The compact design of the SPDE allows surge suppression to be externally installed adjacent to electrical panels or disconnects, and internal to industrial control panels, MP Meter-Pak Meter Centers, EZ Mains or other critical equipment. These devices are designed to provide high-quality surge suppression for a wide variety of commercial, industrial or institutional applications.

Square D™ Surgelogic™ SPDE Series SPDs utilize a high-energy parallel design that provides direct Line to Neutral plus Neutral to Ground suppression at 50kA of surge current rating per phase. They contain a suppression circuit that provides robust, cost effective transient protection.

Voltage	Surge Current Rating	Catalog Numbers		UL 1449 Test Data					
				Voltage Protection Ratings (VPR)				SCCR Withstand	MCOV
		Standard	Audible Alarm and Dry Contacts	L-N	L-G	N-G	L-L		
120V, 1Ø, 2W+G, Single Pole [1][8]	50kA	SPDE0	SPDE0A	700	1200	600	-	100,000A	150
120/240V, 1Ø, 3W+G, Split [2][8]	50kA	SPDE1	SPDE1A	700	1200	600	1200	100,000A	150
208Y/120V, 3Ø, 4W+G, Wye [3][8]	50kA	SPDE2	SPDE2A	700	1200	600	1200	200,000A	150
240/120V, 3Ø 4W+G, High Leg Delta	50kA	-	SPDE3A	700/ 1200	1200/ 1500	600	1200/ 1500	200,000A	150/ 320
480Y/277V, 3Ø, 4W+G, Wye [4][8]	50kA	SPDE4	SPDE4A	1200	1800	1000	2000	200,000A	320
480V, 3Ø, 3W+G, Delta [5]	50kA	-	SPDE5A	-	1800	-	3000	200,000A	552
240V, 3Ø, 3W+G, Delta	50kA	-	SPDE6A	-	1200	-	1500	200,000A	320
600Y/347V, 3Ø, 4W+G, Wye [8]	50kA	-	SPDE8A	1500	2500	1200	2500	200,000A	420
600V, 3Ø, 3W+G, Delta [6]	50kA	-	SPDE9A	-	2500	-	2500	200,000A	690

[1] 120V series also applies to the following voltage 127V
[2] 120/240V series also applies to the following voltage 127/254V
[3] 208Y/120V series also applies to the following voltage 220Y/127V
[4] 480Y/277V series also applies to the following voltages 380Y/220V, 400Y/230V and 415Y/240V
[5] 480V Delta series also applies to the following voltage 480Y/277V HRG
[6] 600V Delta series also applies to the following voltage 600Y/347V HRG
[7] 240/480V series also applies to the following voltage 277/480V
[8] Do not use on ungrounded systems. Systems must be solidly grounded.

Specifications

SPDE Series SPDs	
Performance	
Surge Current Rating per Phase	50kA
Nominal Discharge Current (I_n)	20kA
Short Circuit Current Rating Withstand	100,000A (1Ø models) 200,000A (3Ø models)
Modes of Protection	Line to Neutral + Neutral to Ground Line to Line (Delta Systems)
Suppression Technology	Individually Fused MOVs
Thermal & Overcurrent Protection	Yes
Operating Frequency	50/60 Hz
Repetitive Impulse	5,000
Mechanical Description	
Enclosure	UL/NEMA 4X polycarbonate
Mounting Methods	3/4" NPT
	DIN Rail
	Bracket Mount
Circuit Type	Parallel
Lead Wires	#10 AWG, 3 feet (0.91 meters)
Dry Contact Wires (when equipped)	#18 AWG, 3 feet (0.91 meters)
Operating Altitude	Sea Level-12,000' (3,658 m)
Storage Temperature	-40˚ F (-40˚ C) to 140˚ F (60˚ C)
Operating Temperature	-25° C (-13° F) to +85° C (185° F)
Operating Humidity	0 to 95% non-condensing
Dimensions	3.25 x 3.30 x 3.39 in. (82.59 x 83.82 x 85.99 mm.)
Weight	1.60 lbs. (0.73 kg.)

Flexible Installation

SPDE SPDs are hard wired into the panel via the included 10AWG wire leads. This allows easy mounting for direct bus connection or into a nearby circuit breaker for minimum lead length which maximizes device performance.

Tri-Mount Installation

Tri-Mount enclosure design provides maximum flexibility for installations

Std. 0.75 in. - 14 Nipple

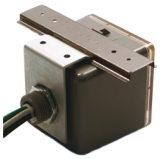

DIN-Rail Mount (rail not incl.)

Bracket Mount for flat surfaces

Listings and Performance

- Type 1: UL 1449 5th Edition, CSA 22.2 No. 269.1
- UL Listed for Installation in Meter-Pak and EZ Main (5 ea. 10-12 AWG ring terminals and 5 ea. 1/4-20 machine screws required, customer supplied)
- Performance Testing documents available
  - TR-80800 SPDE Performance Testing Summary

EZ Meter-Pak™ Recommended Installation

SPD on Top or Bottom

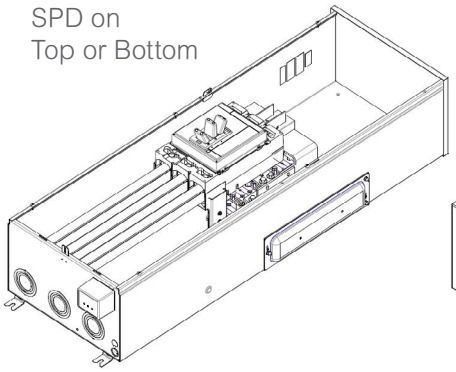

SPD on Side

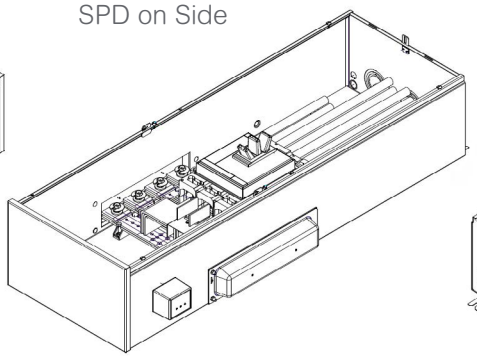

Internal Position
(Recommended)

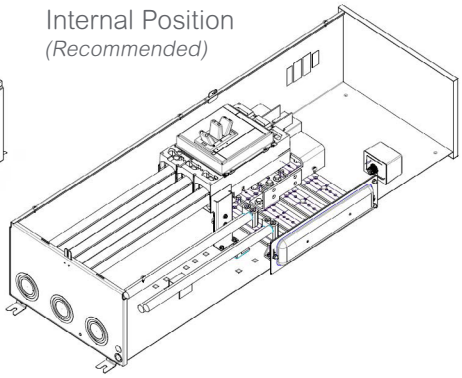

Square D™ Surgelogic™ Hard Wired

HWA

Square D™ Surgelogic™ HWA Surge Protective Devices (SPDs) are surge suppressors with EMI/RFI noise attenuation in a UL/NEMA 4X rated enclosure suitable for installing indoors, outdoors, or in other harsh environments.

The robust design of the HWA allows surge suppression to be externally installed adjacent to electrical distribution equipment. These devices are designed to provide high-quality surge suppression for a wide variety of commercial, industrial or institutional applications.

Square D™ Surgelogic™ HWA SPDs utilize a high-energy parallel design that provides all modes of suppression at 100kA surge current rating per phase. They contain a suppression circuit that not only provides transient suppression, but also enhanced EMI/RFI noise attenuation.

Voltage	Surge Current Rating	Catalog Numbers	UL 1449 Test Data					
			Voltage Protection Ratings (VPR)				SCCR Withstand	MCOV
			L-N	L-G	N-G	L-L		
120/240V, 1Ø, 3W+G, Split [1][6]	100kA	HWA11	900	1200	700	1500	200,000A	150
208Y/120V, 3Ø, 4W+G, Wye [2][6]	100kA	HWA21	900	1200	700	1500	200,000A	150
240/120V, 3Ø, 4W+G, HLD [6]	100kA	HWA31	1000/ 1200	1200/ 1500	700	1500/ 1800	200,000A	150/ 270
480Y/277V, 3Ø, 4W+G, Wye [3][6]	100kA	HWA41	1200	2000	1000	2500	200,000A	320
480V, 3Ø, 3W+G, Delta [4]	100kA	HWA51	-	2500	-	2500	200,000A	640
240V, 3Ø, 3W+G, Delta	100kA	HWA61	-	1500	-	1500	200,000A	300
600Y/347V, 3Ø, 4W+G, Wye [6]	100kA	HWA81	1500	2500	1500	3000	200,000A	420
600V, 3Ø, 3W+G, Delta [5]	100kA	HWA91	-	3000	-	3000	200,000A	840

[1] 120/240V series also applies to the following voltage 127/254V.
[2] 208Y/120V series also applies to the following voltage 220Y/127V.
[3] 480Y/277V series also applies to the following voltages 380Y/220V, 400Y/230V and 415Y/240V.
[4] 480V Delta series also applies to the following voltage 480Y/277V HRG.
[5] 600V Delta series also applies to the following voltage 600Y/347V HRG.
[6] Do not use on ungrounded systems. Systems must be solidly grounded.

Specifications

HWA SPDs	
Performance	
Surge Current Rating per Phase	100kA
Nominal Discharge Current (I_n)	20kA
Short Circuit Current Rating Withstand	200,000A
Modes of Protection	All
Suppression Technology	Individually Fused MOVs
Thermal & Overcurrent Protection	Yes
Enhanced EMI/RFI Noise Attenuation	-54 dB
Operating Frequency	50/60 Hz
Repetitive Impulse	10,000
Mechanical Description	
Enclosure	UL/NEMA 4X polycarbonate
Lead Wires	10 AWG, 2 feet (0.61 meters)
Dry Contact Wires	22 AWG, 2 feet (0.61 meters)
Mounting Method/Circuit Type	External/Parallel
Operating Altitude	Sea Level-12,000' (3,658 m)
Storage Temperature	-40˚ F (-40˚ C) to 149˚ F (65˚ C)
Operating Temperature	-15˚ F (-25˚ C) to 149˚ F (65˚ C)
Operating Humidity	0 to 95% non-condensing
Dimensions	8.62 x 4.80 x 2.92 in. (218.9 x 121.9 x 74.2 mm.)
Weight	5 lbs. (2.3 kg.)
Accessories (Order Separately)	
Remote Monitor	TVS12RMU
Flush Mount Kit	HWAFM

Flexible Installation

HWA SPDs are hard wired into the panel via the included 10AWG wire leads. This allows easy mounting for direct bus connection or into a nearby circuit breaker for minimum lead length which maximizes device performance.

Devices can be surface mounted or flush mounted with optional HWAFM flush mount kit.

Standards and Performance

- Type 2: UL/cUL 1449 5th Edition, CSA 22.2, No. 269.2, UL 1283 7th Edition
- Performance Testing documents available
  - TR-80600 HWA Performance Testing Summary

Square D™ Surgelogic™ Hard Wired

HWB

Square D™ Surgelogic™ HWB Surge Protective Devices (SPDs) are robust surge suppression in a UL/NEMA 4X polycarbonate enclosure suitable for installing indoors, outdoors or in other harsh environments.

The compact design of the HWB allows surge suppression to be externally installed adjacent to electrical distribution equipment. These devices are designed to provide high-quality surge suppression for a wide variety of commercial, industrial or institutional applications.

Square D™ Surgelogic™ HWB SPDs utilize a high-energy parallel design that provides all modes of suppression at 100kA surge current rating per phase. They contain a suppression circuit that provides high quality, cost effective transient protection.

Voltage	Surge Current Rating	Catalog Numbers	UL 1449 Test Data					
			Voltage Protection Ratings (VPR)				SCCR Withstand	MCOV
			L-N	L-G	N-G	L-L		
120V, 1Ø, 2W+G, Single [1]	100kA	HWB01	700	600	600	-	100,000A	150
120/240V, 1Ø, 3W+G, Split [2][7]	100kA	HWB11	600	700	600	1000	100,000A	150
208Y/120V, 3Ø, 4W+G, Wye [3][7]	100kA	HWB21	600	700	600	1000	200,000A	150
240/120V, 3Ø, 4W+G, HLD [7]	100kA	HWB31	600/ 1200	700/ 1200	600	1000	200,000A	150/ 320
480Y/277V, 3Ø, 4W+G, Wye [5][7]	100kA	HWB41	1200	1200	1000	1800	200,000A	320
480V, 3Ø, 3W+G, Delta [6]	100kA	HWB51	-	1200	-	1200	200,000A	552
240V, 3Ø, 3W+G, Delta	100kA	HWB61	-	1800	-	1800	200,000A	320
600Y/347V, 3Ø, 4W+G, Wye [7]	100kA	HWB81	1500	1500	1500	2500	200,000A	420
600V 3Ø, 3W+G, Delta	100kA	HWB91	-	2500	-	2500	200,000A	690

[1] 120V series also applies to the following voltage 127V.
[2] 120/240V series also applies to the following voltage 127/254V.
[3] 208Y/120V series also applies to the following voltage 220Y/127V.
[4] 240V series also applies to the following voltage 277V.
[5] 480Y/277V series also applies to the following voltages 380Y/220V, 400Y/230V and 415Y/240V.
[6] 480V Delta series also applies to the following voltage 480Y/277V HRG.
[7] Do not use on ungrounded systems. Systems must be solidly grounded.

Specifications

HWB SPDs	
Performance	
Surge Current Rating per Phase	100kA
Nominal Discharge Current (I_n)	20kA
Short Circuit Current Rating Withstand	100,000A (1Ø models) 200,000A (3Ø models)
Modes of Protection	All
Suppression Technology	Individually Fused MOVs
Thermal & Overcurrent Protection	Yes
EMI/RFI Noise Attenuation	-25 dB
Operating Frequency	50/60 Hz
Repetitive Impulse	5,000
Mechanical Description	
Enclosure	UL/NEMA 4X polycarbonate
Conduit Fitting	3/4" NPT Threaded Hub
Lead Wires	10 AWG, 3 feet (0.91 meter)
Dry Contact Wires	18 AWG, 3 feet (0.91 meters)
Mounting Method/Circuit Type	External/Parallel
Operating Altitude	Sea Level-12,000' (3,658 m)
Storage Temperature	-40˚ F (-40˚ C) to 140˚ F (60˚ C)
Operating Temperature	-25° C (-13° F) to +85° C (185° F)
Operating Humidity	0 to 95% non-condensing
Dimensions	8.3 x 3.6 x 3.0 in. (211 x 91 x 77 mm.)
Weight	3 lbs. (1.4 kg.)
Accessories (Order Separately)	
Remote Monitor	TVS12RMU
Flush Mount Kit	HWBFM

Flexible Installation

HWB SPDs are hard wired into the panel via the included 10AWG wire leads. The compact design allows for easy mounting for direct bus connection or into a nearby circuit breaker for minimum lead length which maximizes device performance.

Devices can be surface mounted or flush mounted with optional HWBFM flush mount kit.

Standards and Performance

- Type 1: UL/cUL 1449 5th Edition, CSA 22.2 No. 269.1
- Meets NFPA 780 Lightning Protection Systems requirements for UL 96A Master Label.
- Performance Testing documents available
  - TR-80700 HWB Performance Testing Summary

Square D™ Surgelogic™ Hard Wired

HWC

Square D™ Surgelogic™ HWC Surge Protective Devices (SPDs) are surge suppressors with EMI/RFI noise attenuation in a UL/NEMA 4X rated enclosure suitable for installing indoors, outdoors, or in other harsh environments.

The robust design of the HWC allows surge suppression to be externally installed adjacent to electrical distribution equipment. These devices are designed to provide high-quality surge suppression for a wide variety of commercial, industrial or institutional applications.

Square D™ Surgelogic™ HWC SPDs utilize a high-energy parallel design that provides all modes of suppression at 300kA of surge current rating per phase. They contain a suppression circuit that not only provides transient suppression, but also enhanced EMI/RFI noise attenuation.

Voltage	Catalog Numbers	Surge Current Rating	UL 1449 Test Data						
			Type	Voltage Protection Ratings (VPR)				SCCR Withstand	MCOV
				L-N	L-G	N-G	L-L		
120/240V, 1Ø, 3W+G, Split [1][5]	HWC13	300kA	2	800	800	800	1200	200,000A	150
208Y/120V, 3Ø, 4W+G, Wye [2][5]	HWC23	300kA	2	800	800	800	1200	200,000A	150
240/120V, 3Ø, 4W+G, HLD [5]	HWC33	300kA	2	800/1200	800/1200	800	1200/1200	200,000A	150/360
480Y/277V, 3Ø, 4W+G, Wye [3][5]	HWC43	300kA	2	1200	1200	1200	1800	200,000A	320
480V, 3Ø, 3W+G, Delta [4]	HWC53	300kA	2	-	1800	-	2000	200,000A	550
240V, 3Ø, 3W+G, Delta	HWC63	300kA	2	-	1500	-	1800	200,000A	320
600Y/347V, 3Ø, 4W+G, Wye [5]	HWC83	300kA	2	1500	1500	1500	2500	200,000A	420

[1] 120/240V series also applies to the following voltage 127/254V.
[2] 208Y/120V series also applies to the following voltage 220Y/127V.
[3] 480Y/277V series also applies to the following voltages 380Y/220V, 400Y/230V and 415Y/240V.
[4] 480V Delta series also applies to the following voltage 480Y/277V HRG.
[5] Do not use on ungrounded systems. Systems must be solidly grounded.

Specifications

HWC SPDs	
Performance	
Surge Current Rating per Phase	300kA
Nominal Discharge Current (I_n)	20kA
Short Circuit Current Rating Withstand	200,000A
Modes of Protection	All
Suppression Technology	Individually Fused MOVs
Thermal & Overcurrent Protection	Yes
Enhanced EMI/RFI Noise Attenuation	-53dB
Operating Frequency	50/60 Hz
Repetitive Impulse	10,000
Mechanical Description	
Enclosure	NEMA 4X polycarbonate
Lead Wires	10 AWG, 2 feet (0.61 meters)
Dry Contact Wires	18 AWG, 2 feet (0.61 meters)
Mounting Method/Circuit Type	External/Parallel
Operating Altitude	Sea Level-12,000' (3,658 m)
Storage Temperature	-40˚ F (-40˚ C) to 140˚ F (60˚ C)
Operating Temperature	-35° C (-31° F) to +85° C (185° F)
Operating Humidity	0 to 95% non-condensing
Dimensions	9.6 x 4.9 x 4 in. (244 x 124 x 102 mm.)
Weight	4.5 lbs. (2.1 kg.)
Options	
Remote Monitor	TVS12RMU
Flush Mount Kit	HWCFM

Flexible Installation

HWC SPDs are hard wired into the panel via the included 10AWG wire leads. This allows easy mounting for direct bus connection or into a nearby circuit breaker for minimum lead length which maximizes device performance.

Devices can be surface mounted or flush mounted with optional HWCFM flush mount kit.

Listings and Performance

- Type 2: UL 1449 5th Edition, CSA 22.2, No. 269.2, UL 1283 7th Edition
- ANSI/IEEE Std. C62-72-2016 (Clause 13:2) NEMA SPD 1.1-2019 Section 3.3.8 Testing levels passed
- Performance Testing documents available
  - TR-80300 HWC-HWL Performance Testing Summary

Square D™ Surgelogic™ External Mount

EMA

Square D™ Surgelogic™ EMA Surge Protective Devices (SPDs) deliver specification grade performance for service entrance or critical branch panel applications. This multi-phase surge suppression system provides transient suppression and EMI/RFI noise attenuation in a durable UL/NEMA 1 steel enclosure.

The robust design of the EMA allows surge suppression to be externally installed adjacent to electrical distribution equipment. These devices are designed to provide high-quality surge suppression for a wide variety of commercial, industrial or institutional applications.

Square D™ Surgelogic™ EMA SPDs utilize a high-energy parallel design that provides all modes of suppression at 100kA or 200kA surge current rating per phase. They contain a suppression circuit that not only provides transient suppression, but also EMI/RFI noise attenuation.

Voltage	Surge Current Rating	Catalog Numbers	UL 1449 Test Data					
			Voltage Protection Ratings (VPR)				SCCR Withstand	MCOV
			L-N	L-G	N-G	L-L		
120/240V, 1Ø, 3W+G, Split [1][5]	100kA	EMA11	700	700	600	1000	200,000A	150
	200kA	EMA12						
208Y/120V, 3Ø, 4W+G, Wye [2][5][6]	100kA	EMA21	700	700	600	1000	200,000A	150
	200kA	EMA22						
240/120V, 3Ø, 4W+G, HLD[5]	100kA	EMA31	700/ 1200	700/ 1000	600	1200	200,000A	150/ 270
	200kA	EMA32						
480Y/277V, 3Ø, 4W+G, Wye [3][5][6]	100kA	EMA41	1200	1200	1000	2000	200,000A	320
	200kA	EMA42						
480V, 3Ø, 3W+G, Delta [4]	100kA	EMA51	-	1800	-	2000	200,000A	550
	200kA	EMA52						
240V, 3Ø, 3W+G, Delta [4]	100kA	EMA61	-	1200	-	1200	200,000A	320
	200kA	EMA62						
600Y/347V, 3Ø, 4W+G, Wye [5][6]	100kA	EMA81	1500	1500	1200	2500	200,000A	420
	200kA	EMA82						
600V, 3Ø, 3W+G, Delta [4]	100kA	EMA91	-	2500	-	2500	200,000A	840
	200kA	EMA92						

[1] 120/240V series also applies to the following voltage 127/254V.
[2] 208Y/120V series also applies to the following voltage 220Y/127V.
[3] 480Y/277V series also applies to the following voltages 380Y/220V, 400Y/230V and 415Y/240V.
[4] 480V Delta series also applies to the following voltage 480Y/277V HRG.
[5] Do not use on ungrounded systems. Systems must be solidly grounded.
[6] Can be used on 3-wire grounded wye systems without neutral. Jumper the neutral and ground lugs using 10AWG wire.

Specifications

EMA SPDs	
Performance	
Surge Current Rating per Phase	100kA and 200kA
Nominal Discharge Current (I_n)	20kA
Short Circuit Current Rating Withstand	200,000A
Modes of Protection	All
Suppression Technology	Individually Fused MOVs
Thermal & Overcurrent Protection	Yes
EMI/RFI Noise Attenuation	-42 dB
Operating Frequency	50/60 Hz
Repetitive Impulse	20,000
Mechanical Description	
Enclosure	UL/NEMA 1 Steel
Connection Method	10 AWG - 2 AWG Terminals
Mounting Method/Circuit Type	External/Parallel
Operating Altitude	Sea Level-12,000' (3,658 m)
Storage Temperature	-40˚ F (-40˚ C) to 149˚ F (65˚ C)
Operating Temperature	-4˚ F (-20˚ C) to 149˚ F (65˚ C)
Operating Humidity	0 to 95% non-condensing
Dimensions	11 x 12 x 5.5 in. (208 x 290 x 135 mm.)
Weight	23 lbs. (10.4 kg.)
Accessories (Order Separately)	
Remote monitor	TVS12RMU
Flush Mount Kit	EMAFM

Flexible Installation

EMA SPDs are wired into the panel through a lug connection inside the UL/NEMA type 1 steel enclosure. This allows easy mounting for direct bus connection or into a nearby circuit breaker for minimum lead length which maximizes device performance.

Devices can be surface mounted or flush mounted with optional EMAFM flush mount kit.

Standards and Performance

- Type 1: UL 1449 5th Edition
- Type 2: cUL 1449 5th Edition, CSA 22.2 No 269.2
- ANSI/IEEE Std. C62-72-2016 (Clause 13:2) NEMA SPD 1.1-2019 Section 3.3.8 Testing levels passed
- Performance Testing documents available
  - TR-80400 EMA-IMA Performance Testing Summary

Square D™ Surgelogic™ External Mount

EMB

Square D™ Surgelogic™ EMB Surge Protective Devices (SPDs) are surge suppressors with in a UL/NEMA 4X rated polycarbonate enclosure suitable for installing indoor, outdoor or in other harsh environments.

The robust design of the EMB allows surge suppression to be externally installed adjacent to electrical distribution equipment. These devices are designed to provide high-quality surge suppression for a wide variety of commercial, industrial or institutional applications.

Square D™ Surgelogic™ EMB SPDs utilize a high-energy parallel design that provides all modes of suppression at each surge current rating per phase. They contain a suppression circuit that not only provides transient suppression, but also EMI/RFI noise attenuation.

Voltage	Surge Current Rating	Catalog Numbers	UL 1449 Test Data						
			Type	Voltage Protection Ratings (VPR)				SCCR Withstand	MCOV
				L-N	L-G	N-G	L-L		
120V, 1Ø, 2W+G, Single [1] [6]	200kA	EMB02F	2	700	700	700	1200	200,000A	150
120/240V, 1Ø, 3W+G, Split [1][6][7]	200kA	EMB12	1	700	700	700	1200	200,000A	150
		EMB12F	2						
208Y/120V, 3Ø, 4W+G, Wye [2][6][8]	200kA	EMB22	1	700	700	700	1200	200,000A	150
		EMB22F	2						
240/120V, 3Ø, 4W+G, HLD [6]	200kA	EMB32	1	700/ 1200	700/ 1200	700	1200/ 2000	200,000A	150/ 320
480Y/277V, 3Ø, 4W+G, Wye [3][6][8][9]	200kA	EMB42	1	1200	1200	1200	2000	200,000A	320
		EMB42F	2						
480V, 3Ø, 3W+G, Delta [4]	200kA	EMB52	1	-	1800	-	2000	200,000A	552
240V, 3Ø, 3W+G, Delta	200kA	EMB62	1	-	1200	-	2000	200,000A	320
240V, 1Ø, 2W+G, Single [6]	200kA	EMB72F	2	1200	1200	1200	2000	200,000A	320
600Y/347V, 3Ø, 4W+G, Wye [6][8]	200kA	EMB82F	2	1500	1500	1500	2500	200,000A	420
600V, 3Ø, 3W+G, Delta [5]	100kA	EMB91	1	-	2500	-	2500	200,000A	690
240/480V, 1Ø, 3W+G, Split [6]	200kA	EMBA2F	2	1200	1200	1200	2000	200,000A	320

[1] 120/240V series also applies to the following voltage 127/254V.
[2] 208Y/120V series also applies to the following voltage 220Y/127V.
[3] 480Y/277V series also applies to the following voltages 380Y/220V, 400Y/230V and 415Y/240V.
[4] 480V Delta series also applies to the following voltage 480Y/277V HRG.
[5] 600V Delta series also applies to the following voltage 600Y/347V HRG.
[6] Do not use on ungrounded systems. Systems must be solidly grounded.
[7] 120/240S series also applies to the following voltage 120 1Ø, 2W+G. Connect phase A, jumper phase A to C.
[8] Can be used on 3-wire grounded wye systems without neutral. Jumper the neutral and ground lugs using 10AWG wire.

Specifications

EMB SPDs	
Performance	
Surge Current Rating per Phase	200kA (100kA for EMB91)
Nominal Discharge Current (I_n)	20kA
Short Circuit Current Rating Withstand	200,000A
Modes of Protection	All
Suppression Technology	Individually Fused MOVs
Thermal & Overcurrent Protection	Yes
EMI/RFI Noise Attenuation	-25 dB (Type 1)
Enhanced EMI/RFI Noise Attenuation	-50 dB (Type 2)
Operating Frequency	50/60 Hz
Repetitive Impulse	5,000
Mechanical Description	
Enclosure	UL/NEMA 4X non-metallic
Connection Method	14 AWG - 8 AWG Terminals
Mounting Method/Circuit Type	External/Parallel
Operating Altitude	Sea Level -12,000' (3,658 m)
Storage Temperature	-40˚ F (-40˚ C) to 140˚ F (60˚ C)
Operating Temperature	-15˚ F (-25˚ C) to 140˚ F (60˚ C)
Operating Humidity	0 to 95% non-condensing
Dimensions	6 x 6 x 4 in. (152 x 152 x 102 mm.)
Weight	4 lbs. (1.8 kg.)
Accessories (Order Separately)	
Remote Monitor	TVS12RMU
Flush Mount Kit	EMBFM

Flexible Installation

EMB SPDs are wired into the panel through a lug connection inside the UL/NEMA type 4X enclosure. This allows easy mounting for direct bus connection or into a nearby circuit breaker for minimum lead length which maximizes device performance.

Devices can be surface mounted or flush mounted with optional EMBFM flush mount kit

Standards and Performance

- Type 1: UL/cUL 1449 5th Edition, CSA 22.2 No. 269.1
- Type 2: UL/cUL 1449 5th Edition, CSA 22.2 No. 269.2, UL 1283 7th Edition
- ANSI/IEEE Std. C62-72-2016 (Clause 13:2) NEMA SPD 1.1-2019 Section 3.3.8 Testing levels passed
- Meets NFPA 780 Lightning Protection Systems requirements for UL 96A Master Label
- Performance Testing documents available
  - TR-80100 EMB Performance Testing Summary

Square D™ Surgelogic™ External Mount

EMD

Square D™ Surgelogic™ EMD Surge Protective Devices (SPDs) are surge suppressors with in a UL/NEMA 4 rated steel enclosure suitable for installing indoors, outdoors or in other harsh environments.

The robust design of the EMD allows surge suppression to be externally installed adjacent to electrical distribution equipment. These devices are designed to provide high-quality surge suppression for a wide variety of commercial, industrial or institutional applications.

Square D™ Surgelogic™ EMD SPDs utilize a high-energy parallel design that provides all modes of suppression at each surge current rating per phase. They contain a suppression circuit that not only provides transient suppression, but also EMI/RFI noise attenuation.

Voltage	Surge Current Rating	Catalog Numbers	UL 1449 Test Data						
			Type	Voltage Protection Ratings (VPR)				SCCR Withstand	MCOV
				L-N	L-G	N-G	L-L		
120/240V, 1Ø, 3W+G, Split [1][6]	300kA	EMD13	1	800	700	700	1200	100,000A	150
		EMD13F	2						
208Y/120V, 3Ø, 4W+G, Wye [2][6][7]	300kA	EMD23	1	900	800	800	1500	200,000A	150
		EMD23F	2						
	500kA	EMD25	1	700	700	700	1000		
	600kA	EMD26	1	800	800	700	1200		
240/120V, 3Ø, 4W+G, HLD [6]	300kA	EMD33	1	900/ 1500	800/ 1200	800	1500	200,000A	150/ 320
480Y/277V, 3Ø, 4W+G, Wye [3][6][7]	300kA	EMD43	1	1500	1200	1200	2500	200,000A	320
		EMD43F	2						
	500kA	EMD45	1	1200	1200	1000	2000		
	600kA	EMD46	1	1200	1200	1200	1800		
480V, 3Ø, 3W+G, Delta [4]	300kA	EMD53	1	-	1800	-	1800	200,000A	552
	500kA	EMD55	1				1500		
240V, 3Ø, 3W+G, Delta	300kA	EMD63	1	-	1200	-	1500	200,000A	320
600Y/347V, 3Ø, 4W+G, Wye [6][7]	300kA	EMD83F	2	1500	1500	1500	2500	200,000A	420
600V, 3Ø, 3W+G, Delta [5]	300kA	EMD93	1	-	2500	-	2500	200,000A	690

[1] 120/240V series also applies to the following voltage 127/254V.
[2] 208Y/120V series also applies to the following voltage 220Y/127V.
[3] 480Y/277V series also applies to the following voltages 380Y/220V, 400Y/230V and 415Y/240V.
[4] 480V Delta series also applies to the following voltage 480Y/277V HRG.
[5] 600V Delta series also applies to the following voltage 600Y/347V HRG.
[6] Do not use on ungrounded systems. Systems must be solidly grounded.
[7] Can be used on 3-wire grounded Wye systems without neutral. Jumper the neutral and ground lugs using 10AWG wire.

Specifications

EMD SPDs		
Performance		
Surge Current Rating per Phase		300kA, 500kA and 600kA
Nominal Discharge Current (I_n)		20kA
Short Circuit Current Rating Withstand		200,000 Amps (3Ø only)
Modes of Protection		All
Suppression Technology		Individually Fused MOVs
Thermal & Overcurrent Protection		Yes
EMI/RFI Noise Attenuation		-25 dB (Type 1)
Enhanced EMI/RFI Noise Attenuation		-50 dB (Type 2)
Operating Frequency		50/60 Hz
Repetitive Impulse		15,000
Mechanical Description		
Enclosure		UL/NEMA 4 Steel
Connection Method via Internal Disconnect		8 AWG - 6 AWG
Mounting Method/Circuit Type		External/Parallel
Operating Altitude		Sea Level-12,000' (3,658 m)
Storage Temperature		-40˚ F (-40˚ C) to 140˚ F (60˚ C)
Operating Temperature		-15˚ F (-25˚ C) to 140˚ F (60˚ C)
Operating Humidity		0 to 95% non-condensing
Dimensions	300kA	12 x 12 x 6.5 in. (305 x 305 x 165 mm.)
	500kA	16 x 14 x 7.5 in. (406 x 356 x 190 mm.)
	600kA	20 x 20 x 7.5 in. (508 x 508 x 190 mm.)
Weight	300kA	23 lbs. (10.4 kg.)
	500kA	32 lbs. (14.5 kg.)
	600kA	53 lbs. (23.6 kg.)
Accessory (Order Separately)		
Remote Monitor		TVS12RMU

Flexible Installation

EMD SPDs are wired into the panel through a compression lug connection on the disconnect switch inside the UL/NEMA type 4 steel enclosure. This allows easy mounting for direct bus connection or into a nearby circuit breaker for minimum lead length which maximizes device performance.

Standards and Performance

- Type 1: UL/cUL 1449 5th Edition, CSA 22.2 No. 269.1
- Type 2: UL/cUL 1449 5th Edition, CSA 22.2 No. 269.2, UL 1283 7th Edition
- ANSI/IEEE Std. C62-72-2016 (Clause 13:2) NEMA SPD 1.1-2019 Section 3.3.8 Testing levels passed
- Meets NFPA 780 Lightning Protection Systems requirements for UL 96A Master Label
- Performance Testing documents available
  - TR-80200 EMD-EML-IMB Performance Testing Summary

Square D™ Surgelogic™ External Mount with Discrete Line-Line Protection

EML/HWL

Square D™ Surgelogic™ EML/HWL Surge Protective Devices (SPDs) are surge suppressors with discrete line to line protection elements and EMI/RFI noise attenuation suitable for installing indoors, outdoors, or in other harsh environments.

The robust design allows surge suppression to be externally installed adjacent to electrical distribution equipment. These devices are designed to provide high-quality surge suppression for a wide variety of commercial, industrial or institutional applications.

Square D™ Surgelogic™ SPDs utilize a high-energy parallel design that provides all modes of suppression at each surge current rating per phase. They contain a suppression circuit that not only provides transient suppression, but also EMI/RFI noise attenuation.

Voltage	Surge Current Rating	Catalog Numbers	UL 1449 Test Data					
			Voltage Protection Ratings (VPR)				SCCR Withstand	MCOV
			L-N	L-G	N-G	L-L		
120/240V, 1Ø, 3W+G, Split [1][4]	300kA	HWL13	800	800	800	1200	100,000A	150
208Y/120V, 3Ø, 4W+G, Wye [2][4][5]	300kA	EML23	700	700	700	1200	200,000A	150
		HWL23	800	800	800	1200		
480Y/277V, 3Ø, 4W+G, Wye [3][4][5]	300kA	EML43	1500	1200	1200	1800	200,000A	320
		HWL43	1200	1200	1200	1800		

[1] 120/240V series also applies to the following voltage 127/254V.
[2] 208Y/120V series also applies to the following voltage 220Y/127V.
[3] 480Y/277V series also applies to the following voltages 380Y/220V, 400Y/230V and 415Y/240V.
[4] Do not use on ungrounded systems. Systems must be solidly grounded.
[5] Can be used on 3-wire grounded wye systems without neutral. Jumper the neutral and ground lugs using 10AWG wire.

Specifications

Performance	EML	HWL
Surge Current Rating per Phase	300kA	
Nominal Discharge Current (I_n)	20kA	
Short Circuit Current Rating Withstand	200,000 Amps	
Discrete Modes of Protection	10	
Suppression Technology	Individually Fused MOVs	
Thermal & Overcurrent Protection	Yes	
EMI/RFI Noise Attenuation	-27.5 dB	-53 dB
Operating Frequency	50/60 Hz	
Repetitive Impulse	15,000	10,000

Mechanical	EML	HWL
UL/NEMA Enclosure Rating	4 Steel	4X polycarbonate
Connection Method	8 AWG - 6 AWG	10 AWG Wire Leads
Mounting Method/ Circuit Type	External/Parallel	
Operating Altitude	Sea Level-12,000' (3,658 m)	
Storage Temperature	-40˚F (-40˚C) to 140˚F (60˚C)	
Operating Temperature	-15˚F (-25˚C) to 140˚F (60˚C)	-31˚F (-35˚C) to 185˚F (85˚C)
Operating Humidity	0 to 95% non-condensing	
Dimensions	12 x 12 x 6.5 in. (305 x 305 x 165 mm.)	9.6 x 4.9 x 4 in. (244 x 124 x 102 mm.)
Weight	23 lbs. (10.4 kg.)	4.5 lbs. (2.1 kg.)

Square D™ Surgelogic™ External Mount with Stainless Steel Enclosure

EMA SD

Square D™ Surgelogic™ EMA Surge Protective Devices (SPDs) deliver specification grade performance for service entrance or critical branch panel applications. This multi-phase surge suppression system provides transient suppression and EMI/RFI noise attenuation in a corrosion resistant UL/NEMA 4X 304 stainless steel enclosure.

The robust design of the EMA allows surge suppression to be externally installed adjacent to electrical distribution equipment. These devices are designed to provide high-quality surge suppression for a wide variety of commercial, industrial or institutional applications.

Square D™ Surgelogic™ EMA SPDs utilize a high-energy parallel design that provides all modes of suppression at each surge current rating per phase. They contain a suppression circuit that not only provides transient suppression, but also EMI/RFI noise attenuation.

Voltage	Surge Current Rating	Catalog Numbers	UL 1449 Test Data					
			Voltage Protection Ratings (VPR)				SCCR Withstand	MCOV
			L-N	L-G	N-G	L-L		
120/240V, 1Ø, 3W+G, Split [1][5]	240kA	SSP01EMA24SD	900	900	700	1200	200,000A	150
208Y/120V, 3Ø, 4W+G, Wye [2][5][6]	240kA	SSP02EMA24SD	900	900	700	1200	200,000A	150
	480kA	SSP02EMA48SD	900	900	800	1500		
240/120V, 3Ø, 4W+G, HLD[5]	240kA	SSP03EMA24SD	900 / 1500	900 / 1200	700	1500	200,000A	150/ 270
480Y/277V, 3Ø, 4W+G, Wye [3][5][6]	240kA	SSP04EMA24SD	1200	1200	1200	2500	200,000A	320
	480kA	SSP04EMA48SD	1500	1500	1200	2500		
480V, 3Ø, 3W+G, Delta [4]	240kA	SSP05EMA24SD	-	1800	-	2500	200,000A	550

[1] 120/240V series also applies to the following voltage 127/254V.
[2] 208Y/120V series also applies to the following voltage 220Y/127V.
[3] 480Y/277V series also applies to the following voltages 380Y/220V, 400Y/230V and 415Y/240V.
[4] 480V Delta series also applies to the following voltage 480Y/277V HRG.
[5] Do not use on ungrounded systems. Systems must be solidly grounded.
[6] Can be used on 3-wire grounded wye systems without neutral. Jumper the neutral and ground lugs using 10AWG wire.

Specifications

Performance		Mechanical		
Surge Current Rating per Phase	240kA and 480kA	Enclosure	UL/NEMA 4X 304 Stainless Steel	
Nominal Discharge Current (I_n)	20kA	Connection Method via Internal Disconnect	10 AWG - 3/0 AWG Terminals	
Short Circuit Current Rating Withstand	200,000A	Mounting Method/Circuit Type	External/Parallel	
Modes of Protection	All	Operating Altitude	Sea Level-12,000' (3,658 m)	
Suppression Technology	Individually Fused MOVs	Storage Temperature	-40˚ F (-40˚ C) to 149˚ F (65˚ C)	
Thermal & Overcurrent Protection	Yes	Operating Temperature	-4˚ F (-20˚ C) to 149˚ F (65˚ C)	
EMI/RFI Filtering	-42 dB	Operating Humidity	0 to 95% non-condensing	
Operating Frequency	50/60 Hz	Dimensions	11.7 x 22.7 x 9.4 in. (297 x 576 x 239 mm.)	
Repetitive Impulse	20,000	Weight	240kA	32.2 lbs (14.6 kg)
			480kA	45.2 lbs (20.5 kg)

Service and Support

The Square D™ Surgelogic™ Team is here to assist you with all of your surge protective device (SPD) needs.

Each territory is covered by highly trained specialist to provide world class service and support.

Pre-Bid Support

- Over 1,000 jobs are downloaded per month from the Electronic Plan Rooms, providing us with complete surge protection take-offs, drawings, and specifications.
- Notifications are sent to the National Sales Force and distributor partners, listing the jobs available for bidding.
- We develop project SPD bills of material to be entered into SE Advantage, ensuring the most cost-competitive package that meets the specified requirements.
- Prior Approval Packages (PAPs) are sent for jobs where Square D™ Surgelogic™ is not approved.
- Consulting Engineers who specify our gear but not our SPDs are targeted for training, with the goal of becoming specified for future projects
- Our proprietary database contains consultant specification approval practices, to help ensure approval.

Post-Bid Support

Project Tracking to Conclusion

- After a project is awarded, our team reaches out to the project stakeholders to identify the contractor awarded the electrical portion of the project. National Sales Force and distributor partners who requested notifications are promptly advised once the project winner is identified.

Job Follow Up

- For consultants requiring additional SPD submittal details, our surge team can provide complete shop drawing submittals that include performance testing as well as other required documentation.
- Technical support provided for questions or rejections from Consulting Engineers, including compliance, deviation and exception (CDE) notes on the specification.

Ongoing Support

- In Person Product Training
- Site Visits with Recommendations
- Specification Interpretation
- Expert Product Selection
- Competitor Product Comparisons
- Technical Application Group Support
- Product Forensics on Failed Units
- World Class Product Handouts

Circuit Breaker and Wire Ranges

Model #	Allowable Range		Factory Suggested Size
	Circuit Breaker Size	Connection Wire Size	Circuit Breaker Size
EMA	30A - 100A	10 AWG - 2 AWG	60A
EMB	15A – 50A	14 AWG - 8 AWG	30A
EMD / EML	30A – 60A	8 AWG - 6 AWG	60A
HWA	15A – 30A	10 AWG Wire Leads Provided	30A
HWB	15A - 30A	10 AWG Wire Leads Provided	30A
HWC / HWL	15A – 30A	10 AWG Wire Leads Provided	30A
SDSA	15A – 20A	14 AWG Wire Leads Provided	20A
SPDE	15A – 30A	10 AWG Wire Leads Provided	30A

For technical support contact SPDTAG@se.com (800) 577-7353

Whole Home Surge Protection

All SPDs Meet NEC® 2020 & 2023 Code

www.se.com

Life Is On | Schneider Electric

Schneider Electric
6700 Tower Cir #700
Franklin, TN 37067

© 2025 Schneider Electric. All Rights Reserved. Life Is On Schneider Electric is a trademark and the property of Schneider Electric SE, its subsidiaries and affiliated companies.

998-23292950 RevB 06/2025

The information provided in this document contains general descriptions and/or technical characteristics of the performance of the described products or services. For detailed specification, performance, and instruction of use, refer to corresponding catalogs and user guides if available.

Schneider Electric reserves the right to make changes or updates with respect to or in the content of this document or the format thereof, at any time without notice.