Product data sheet

Specifications

Head for illuminated push button, Harmony XB5, plastic, red flush, 22mm, universal LED, for insetion of legend

ZB5AA48

Product availability: Stock - Normally stocked in distribution facility
Important message: A change in appearance may be noted on the product but does not affect its use in terms of function and safety. This makes it compatible with our Universal LED blocks

Main

Range of Product	Harmony XB5
Product or Component Type	Head for illuminated push-button
Device short name	ZB5
Product Compatibility	Universal LED
Bezel material	Dark grey plastic
Mounting diameter	0.9 in (22 mm)
Sale per indivisible quantity	1
Head type	Standard
Shape of signaling unit head	Round
Type of operator	spring return
Operator profile	Red flush, unmarked
Operator additional information	For insertion of legend

Complementary

CAD overall width	1.1 in (29 mm)
CAD overall height	1.1 in (29 mm)
CAD overall depth	1.2 in (30 mm)
Net Weight	0.040 lb(US) (0.018 kg)
Resistance to high pressure washer	1015.3 psi (7000000 Pa) 131 °F (55 °C) 0.1 m
Mechanical durability	10000000 cycles
Station name	XALD 1...5 cut-outs XALK 2...5 cut-outs
Cap/operator or lens colour	Red
Marking	Unmarked

Disclaimer: This documentation is not intended as a substitute for and is not to be used for determining suitability or reliability of these products for specific user applications

Price is “List Price” and may be subject to a trade discount – check with your local distributor or retailer for actual price.

Electrical composition code	M1 6 single front mounting integral LED M2 6 single and double front mounting integral LED M6 2 single front mounting integral LED and transformer M10 2 single front mounting integral LED MF1 2 single front mounting integral LED MR1 2 single rear mounting integral LED C3 6 single front mounting C4 6 single and double front mounting C14 2 single front mounting SF2 2 single front mounting SR2 2 single rear mounting
Device presentation	Basic element

Environment

Protective treatment	TC
Ambient Air Temperature for Storage	-40…158 °F (-40…70 °C)
Ambient air temperature for operation	-40…158 °F (-40…70 °C)
Overvoltage category	Class II conforming to IEC 60536
IP degree of protection	IP66 IEC 60529 IP67 IP69 IP69K
NEMA degree of protection	NEMA 13 NEMA 4X
IK degree of protection	IK03 conforming to IEC 62262
Standards	IEC 60947-5-1 UL 508 CSA C22.2 No 14 GB 14048.5 IEC 60947-1 JIS C8201-5-1 IEC 60947-5-4 JIS C8201-1
Product Certifications	DNV CSA BV LROS (Lloyds register of shipping) UL Listed
Vibration resistance	5 gn (f= 2…500 Hz) conforming to IEC 60068-2-6
Shock resistance	30 gn 18 ms) half sine wave acceleration IEC 60068-2-27 50 gn 11 ms) half sine wave acceleration IEC 60068-2-27

Ordering and shipping details

Category	US10CS222467
Discount Schedule	0CS2
GTIN	3389110904727
Returnability	Yes
Country of origin	FR

Packing Units

Unit Type of Package 1	PCE
Nbr. of units in pkg.	1
Package 1 Height	1.3 in (3.4 cm)
Package 1 Width	2.1 in (5.4 cm)

Package 1 Length	3.5 in (9 cm)
Package weight(Lbs)	0.7 oz (20 g)
Unit Type of Package 2	BB1
Number of Units in Package 2	5
Package 2 Height	1.3 in (3.4 cm)
Package 2 Width	3.5 in (9 cm)
Package 2 Length	10.4 in (26.5 cm)
Package 2 Weight	3.5 oz (100 g)
Unit Type of Package 3	S03
Number of Units in Package 3	150
Package 3 Height	11.8 in (30 cm)
Package 3 Width	11.8 in (30 cm)
Package 3 Length	15.7 in (40 cm)
Package 3 Weight	7.615 lb(US) (3.454 kg)

Contractual warranty

Warranty	18 months

Environmental Data

Schneider Electric aims to achieve Net Zero status by 2050 through supply chain partnerships, lower impact materials, and circularity via our ongoing “Use Better, Use Longer, Use Again” campaign to extend product lifetimes and recyclability.

Environmental Data explained

How we assess product sustainability

Environmental footprint

Carbon footprint (kg CO2 eq, Total Life cycle)	1
Environmental Disclosure	Product Environmental Profile

Use Better

Materials and Substances

Packaging made with recycled cardboard	Yes
Packaging without single use plastic	No
EU RoHS Directive	Pro-active compliance (Product out of EU RoHS legal scope)
REACh Regulation	REACh Declaration
California proposition 65	WARNING: This product can expose you to chemicals including: Di-isodecyl phthalate (DIDP), which is known to the State of California to cause birth defects or other reproductive harm. For more information go to www.P65Warnings.ca.gov

Use Again

Repack and remanufacture

Recyclability potential, in %	29
Circularity Profile	End of Life Information
Take-back	No

Dimensions Drawings

Dimensions

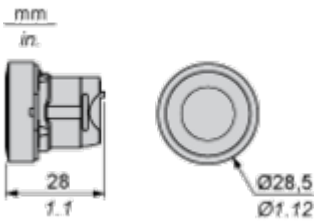

Mounting and Clearance

Panel Cut-out for Pushbuttons, Switches and Pilot Lights (Finished Holes, Ready for Installation)

Connection by Screw Clamp Terminals or Plug-in Connectors or on Printed Circuit Board

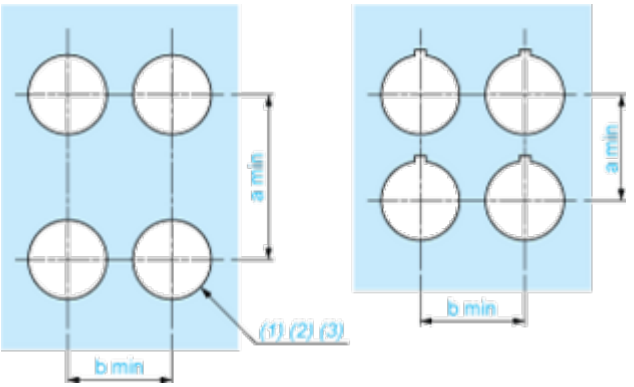

(1) Diameter on finished panel or support
(2) For selector switches and Emergency stop buttons, use of an anti-rotation plate type ZB5AZ902 is recommended.
(3) Ø22.5 mm recommended (Ø22.3 $_{0}^{+0.4}$) / Ø0.89 in. recommended (Ø0.88 in. $_{0}^{+0.016}$)

Connections	a in mm	a in in.	b in mm	b in in.
By screw clamp terminals or plug-in connector	40	1.57	30	1.18
By Faston connectors	45	1.77	32	1.26
On printed circuit board	30	1.18	30	1.18

Detail of Lug Recess

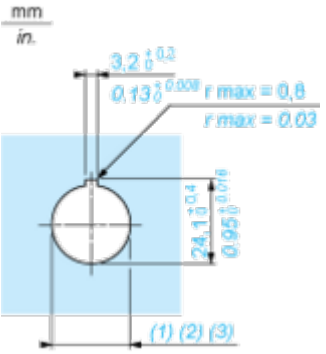

(1) Diameter on finished panel or support
(2) For selector switches and Emergency stop buttons, use of an anti-rotation plate type ZB5AZ902 is recommended.
(3) Ø22.5 mm recommended (Ø22.3 $_{0}^{+0.4}$) / Ø0.89 in. recommended (Ø0.88 in. $_{0}^{+0.016}$)

Pushbuttons, Switches and Pilot Lights for Printed Circuit Board Connection

Panel Cut-outs (Viewed from Installer's Side)

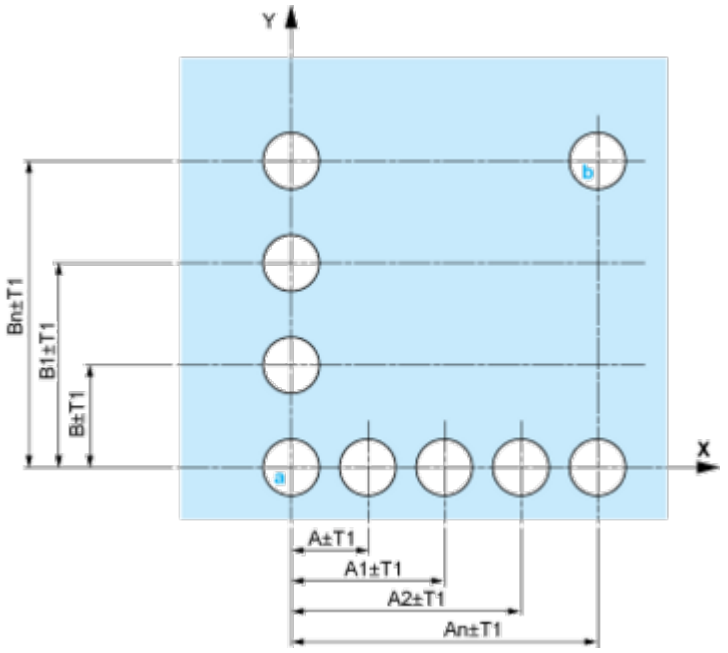

A: 30 mm min. / 1.18 in. min.
B: 40 mm min. / 1.57 in. min.

Printed Circuit Board Cut-outs (Viewed from Electrical Block Side)

Dimensions in mm

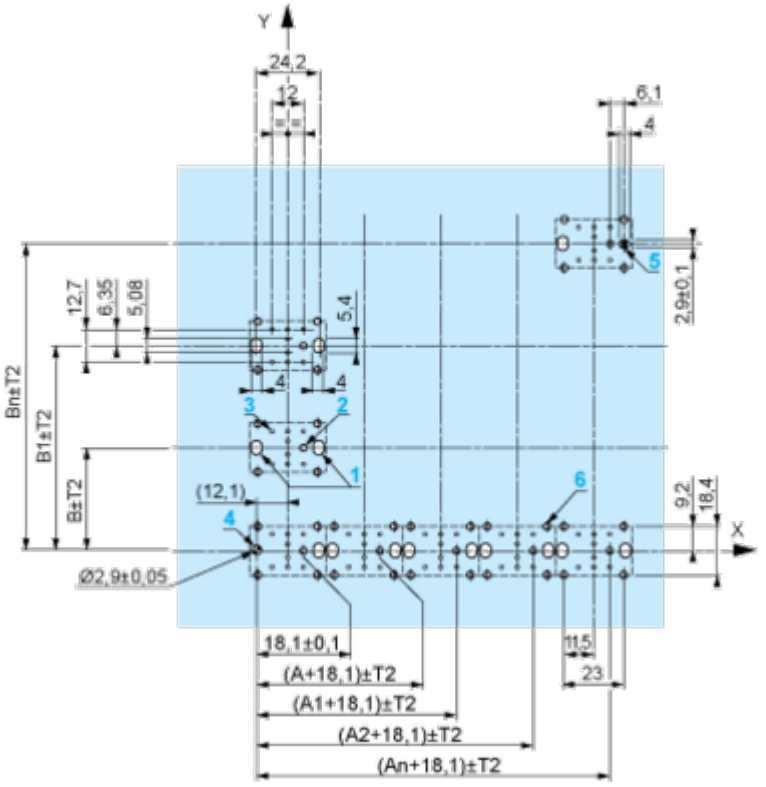

A: 30 mm min.
B: 40 mm min.
Dimensions in in.

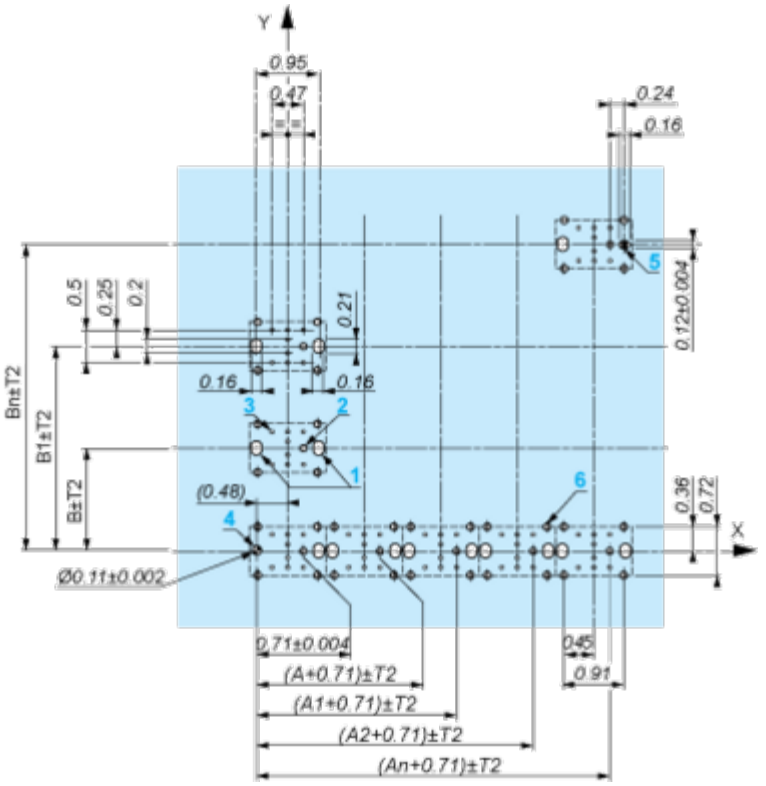

A: 1.18 in. min.
B: 1.57 in. min.

General Tolerances of the Panel and Printed Circuit Board

The cumulative tolerance must not exceed 0.3 mm / 0.012 in.: T1 + T2 = 0.3 mm max.

Installation Precautions

- Minimum thickness of circuit board: 1.6 mm / 0.06 in.
- Cut-out diameter: 22.4 mm ± 0.1 / 0.88 in. ± 0.004
- Orientation of body/fixing collar ZB5AZ009: ± 2°30' (excluding cut-outs marked **a** and **b**).
- Tightening torque of screws ZBZ006: 0.6 N.m (5.3 lbf.in) max.
- Allow for one ZB5AZ079 fixing collar/pillar and its fixing screws:
  - every 90 mm / 3.54 in. horizontally (X), and 120 mm / 4.72 in. vertically (Y).
  - with each selector switch head (ZB5AD•, ZB5AJ•, ZB5AG•).

The fixing centers marked **a** and **b** are diagonally opposed and must align with those marked **4** and **5**.

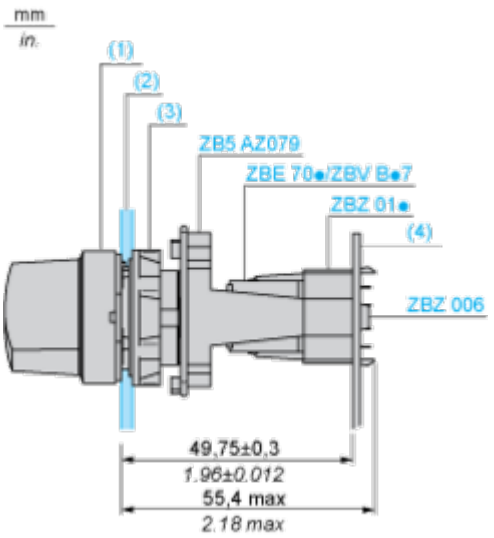

(1) Head ZB5AD•
(2) Panel
(2) Nut
(4) Printed circuit board

Mounting of Adapter (Socket) ZBZ01•

- **1** 2 elongated holes for ZBZ006 screw access
- **2** 1 hole Ø 2.4 mm ± 0.05 / 0.09 in. ± 0.002 for centring adapter ZBZ01•
- **3** 8 × Ø 1.2 mm / 0.05 in. holes
- **4** 1 hole Ø 2.9 mm ± 0.05 / 0.11 in. ± 0.002, for aligning the printed circuit board (with cut-out marked **a**)
- **5** 1 elongated hole for aligning the printed circuit board (with cut-out marked **b**)
- **6** 4 holes Ø 2.4 mm / 0.09 in. for clipping in adapter ZBZ01•

Dimensions An + 18.1 relate to the Ø 2.4 mm ± 0.05 / 0.09 in. ± 0.002 holes for centring adapter ZBZ01•.

Technical Description

Electrical Composition Corresponding to Code C3

Electrical Composition Corresponding to Code C4

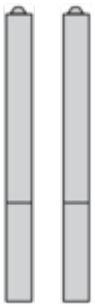

Electrical Composition Corresponding to Codes C14, SF2 and SR2

Electrical Composition Corresponding to Codes M1 and M7

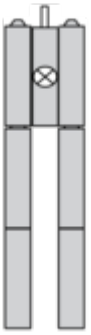

Electrical Composition Corresponding to Codes M2 and M8

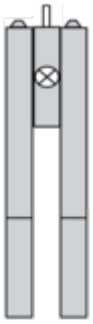

Electrical Composition Corresponding to Codes M6 and P2

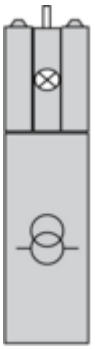

Electrical Composition Corresponding to Codes M5, M10, MF1, MR1 and MF2

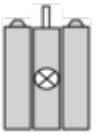

Legend

Single contact

Double contact

Light block

Possible location

Technical Illustration

Dimensions

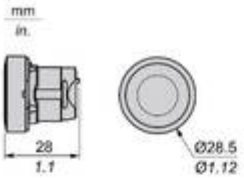

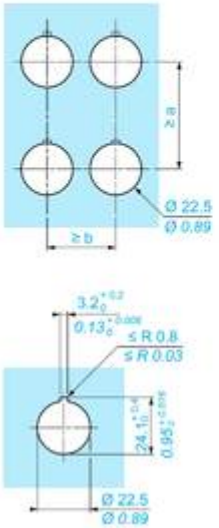

		a (mm)	a (in.)	b (mm)	b (in.)
ZBE●●●●●	ZBV●●●●	40	1.57	30	1.18
ZBE●●●●●3	ZBV●●●●3	45	1.77	32	1.26
ZBE●●●●●4	ZBV●●●●4	40	1.57	30	1.18
ZBE●●●●●5	ZBV●●●●5	50	1.97	30	1.18
ZBE●●●●●9	ZBV●●●●9	40	1.57	30	1.18
ZBRT●	ZBRV1	40	1.57	30	1.18

Offer Marketing Illustration

Product benefits / Features

Offer Marketing Illustration

Product benefits / Features

Image of product / Alternate images

Alternative

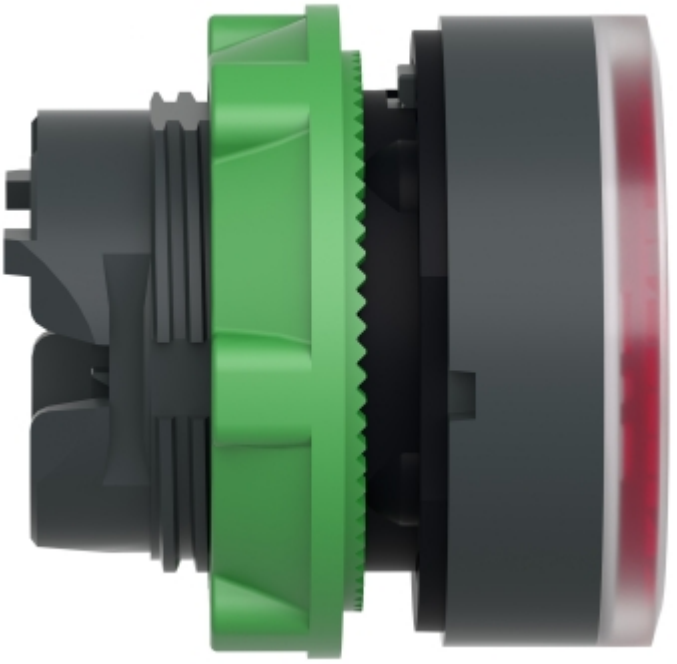

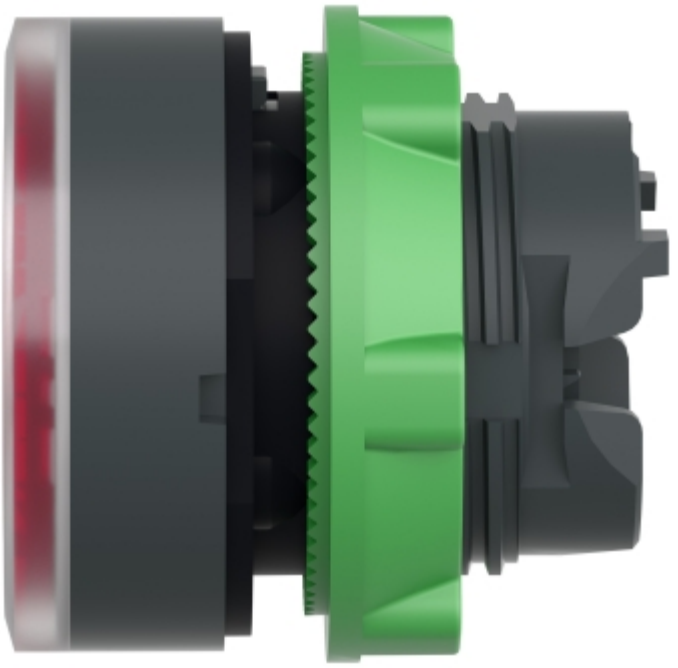

Image of product in real life situation