Product data sheet

Specifications

Harmony, 22mm Push Button, selector switch operating head, 3 position, maintained, black, unmarked

ZB4BD3

Product availability: Stock - Normally stocked in distribution facility

Main

Range of Product	Harmony XB4
Product or Component Type	Head for selector switch
Device short name	ZB4
Bezel material	Chromium plated metal
Mounting diameter	0.9 in (22 mm)
Head type	Standard
Sale per indivisible quantity	1
Shape of signaling unit head	Round
Type of operator	stay put
Operator profile	Black standard handle
Operator position information	3 positions +/- 45°

Complementary

CAD overall width	1.1 in (29 mm)
CAD overall height	1.1 in (29 mm)
CAD overall depth	1.7 in (44 mm)
Net Weight	0.09 lb(US) (0.04 kg)
Resistance to high pressure washer	1015.3 psi (7000000 Pa) 131 °F (55 °C) 0.1 m
Mechanical durability	1000000 cycles
Electrical composition code	C3 6 single front mounting C4 6 single and double front mounting C5 5 single front mounting C6 5 single and double front mounting C7 4 single front mounting C8 4 single and double front mounting C11 3 single front mounting
Device presentation	Basic element

Environment

Protective treatment	TH
Ambient Air Temperature for Storage	-40…158 °F (-40…70 °C)
Ambient air temperature for operation	-40…158 °F (-40…70 °C)
Overvoltage category	Class I conforming to IEC 60536

Price is “List Price” and may be subject to a trade discount – check with your local distributor or retailer for actual price.

Disclaimer: This documentation is not intended as a substitute for and is not to be used for determining suitability or reliability of these products for specific user applications

IP degree of protection	IP67 IEC 60529 IP69 IP69K
NEMA degree of protection	NEMA 13 NEMA 4X
IK degree of protection	IK06 conforming to IEC 50102
Standards	IEC 60947-5-5 IEC 60947-1 UL 508 CSA C22.2 No 14 IEC 60947-5-4 IEC 60947-5-1 JIS C8201-5-1 JIS C8201-1
Product Certifications	CSA DNV BV LROS (Lloyds register of shipping) UL Listed
Vibration resistance	5 gn (f= 2…500 Hz) conforming to IEC 60068-2-6
Shock resistance	30 gn 18 ms) half sine wave acceleration IEC 60068-2-27 50 gn 11 ms) half sine wave acceleration IEC 60068-2-27

Ordering and shipping details

Category	US10CS222468
Discount Schedule	0CS2
GTIN	3389110888966
Returnability	Yes
Country of origin	FR

Packing Units

Unit Type of Package 1	PCE
Nbr. of units in pkg.	1
Package 1 Height	1.417 in (3.600 cm)
Package 1 Width	2.087 in (5.300 cm)
Package 1 Length	2.087 in (5.300 cm)
Package weight(Lbs)	1.552 oz (44.000 g)
Unit Type of Package 2	S03
Number of Units in Package 2	250
Package 2 Height	11.811 in (30.000 cm)
Package 2 Width	11.811 in (30.000 cm)
Package 2 Length	15.748 in (40.000 cm)
Package 2 Weight	25.763 lb(US) (11.686 kg)
Unit Type of Package 3	P06
Number of Units in Package 3	2000
Package 3 Height	29.528 in (75.000 cm)
Package 3 Width	23.622 in (60.000 cm)
Package 3 Length	31.496 in (80.000 cm)

Package 3 Weight	229.731 lb(US) (104.204 kg)

Contractual warranty

Warranty (in months)	18

Environmental Data

Schneider Electric aims to achieve Net Zero status by 2050 through supply chain partnerships, lower impact materials, and circularity via our ongoing “Use Better, Use Longer, Use Again” campaign to extend product lifetimes and recyclability.

Environmental Data explained >

How we assess product sustainability >

Environmental footprint

Carbon footprint (kg CO2 eq, Total Life cycle)	1
Environmental Disclosure	Product Environmental Profile

Use Better

Materials and Substances

Packaging made with recycled cardboard	No
Packaging without single use plastic	No
EU RoHS Directive	Pro-active compliance (Product out of EU RoHS legal scope)
REACh Regulation	REACh Declaration
California proposition 65	WARNING: This product can expose you to chemicals including: Lead and lead compounds, which is known to the State of California to cause cancer and birth defects or other reproductive harm. For more information go to www.P65Warnings.ca.gov

Use Longer

Lifetime extension

Repair	No

Use Again

Repack and remanufacture

Circularity Profile	End of Life Information
Take-back	No

Dimensions Drawings

Dimensions

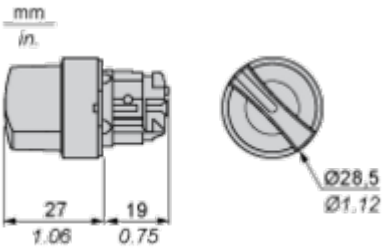

Mounting and Clearance

Panel Cut-out for Pushbuttons, Switches and Pilot Lights (Finished Holes, Ready for Installation)

Connection by Screw Clamp Terminals or Plug-in Connectors or on Printed Circuit Board	Connection by Faston Connectors
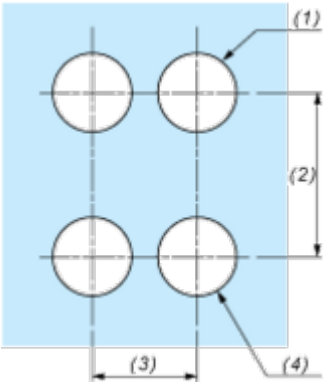	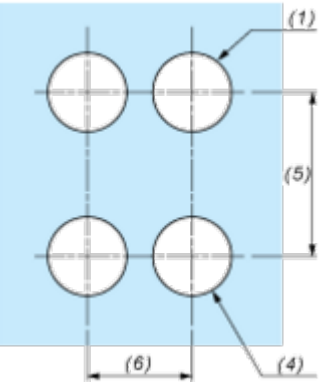

(1) Diameter on finished panel or support
(2) 40 mm min. / 1.57 in. min.
(3) 30 mm min. / 1.18 in. min.
(4) Ø 22.5 mm / 0.89 in. recommended (Ø 22.3 mm $_{0}^{+0.4}$ / 0.88 in. $_{0}^{+0.016}$)
(5) 45 mm min. / 1.78 in. min.
(6) 32 mm min. / 1.26 in. min.

Pushbuttons, Switches and Pilot Lights for Printed Circuit Board Connection

Panel Cut-outs (Viewed from Installer's Side)

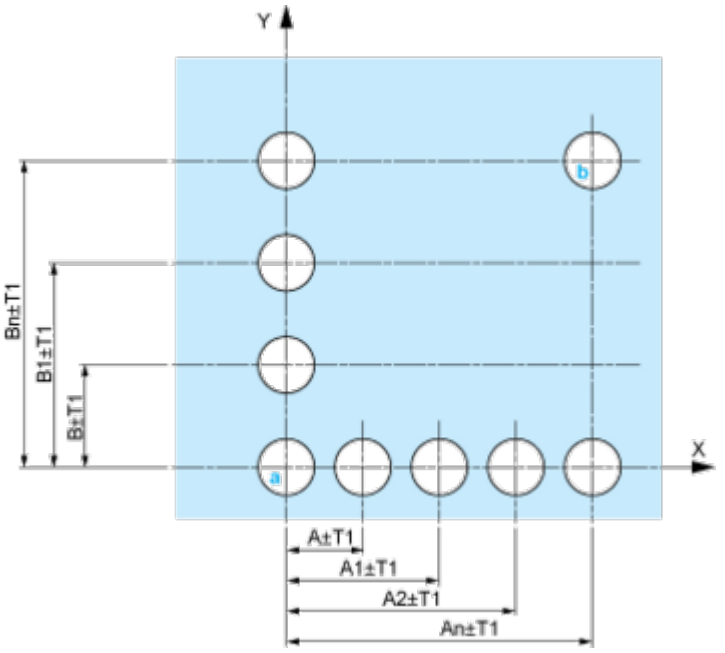

A: 30 mm min. / 1.18 in. min.
B: 40 mm min. / 1.57 in. min.

Printed Circuit Board Cut-outs (Viewed from Electrical Block Side)

Dimensions in mm

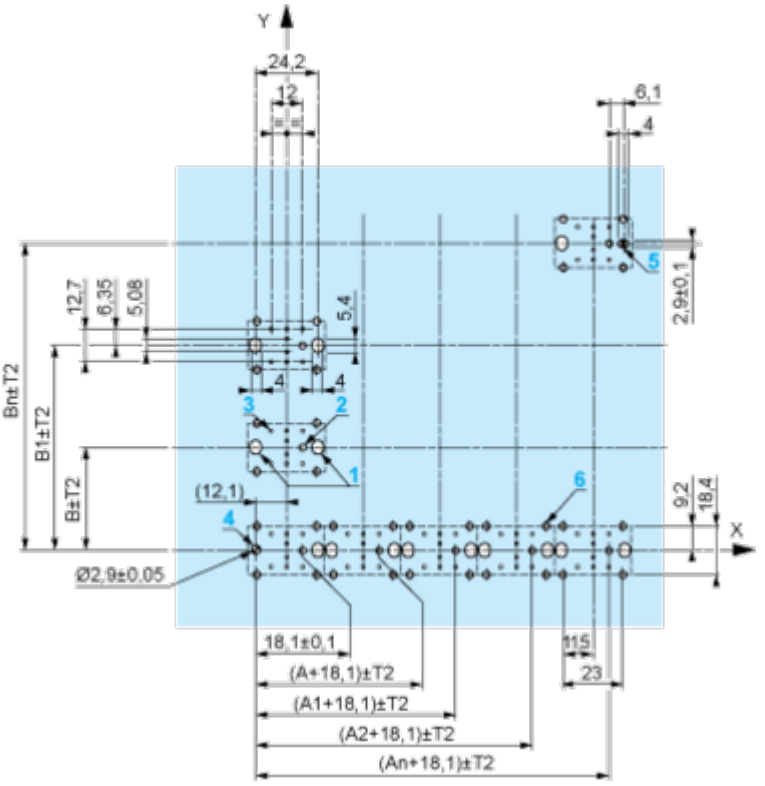

A: 30 mm min.
B: 40 mm min.
Dimensions in in.

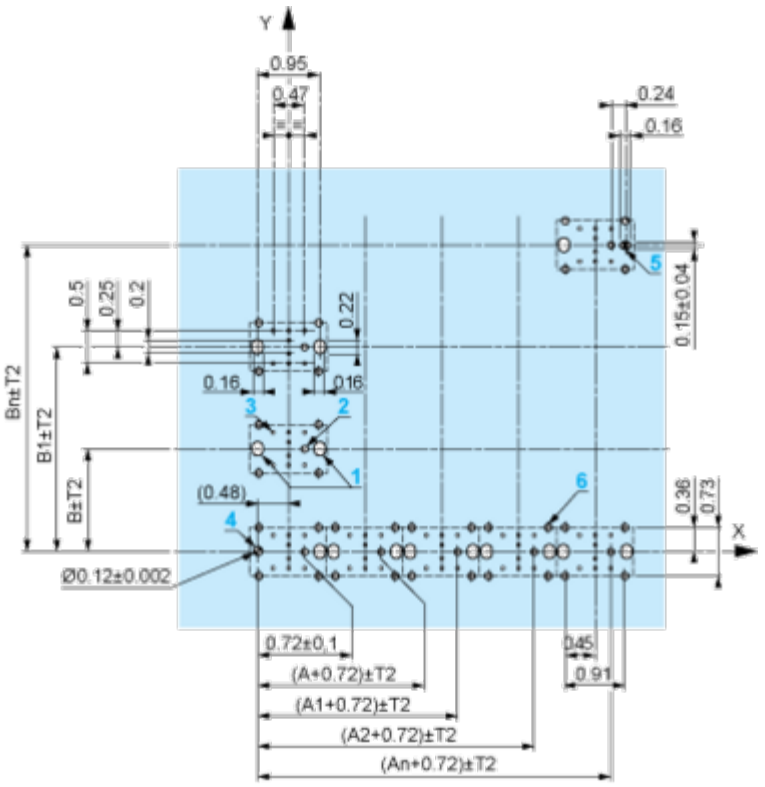

A: 1.18 in. min.
B: 1.57 in. min.

General Tolerances of the Panel and Printed Circuit Board

The cumulative tolerance must not exceed 0.3 mm / 0.012 in: T1 + T2 = 0.3 mm max.

Installation Precautions

- Minimum thickness of circuit board: 1.6 mm / 0.06 in.
- Cut-out diameter: 22.4 mm ± 0.1 / 0.88 in. ± 0.004
- Orientation of body/fixing collar ZB4 BZ009: ± 2°30' (excluding cut-outs marked **a** and **b**).
- Tightening torque of screws ZBZ 006: 0.6 N.m (5.3 lbf.in) max.
- Allow for one ZB4 BZ079 fixing collar/pillar and its fixing screws:
  - every 90 mm / 3.54 in. horizontally (X), and 120 mm / 4.72 in. vertically (Y).
  - with each selector switch head (ZB4 BD•, ZB4 BJ•, ZB4 BG•).

The fixing centers marked **a** and **b** are diagonally opposed and must align with those marked **4** and **5**.

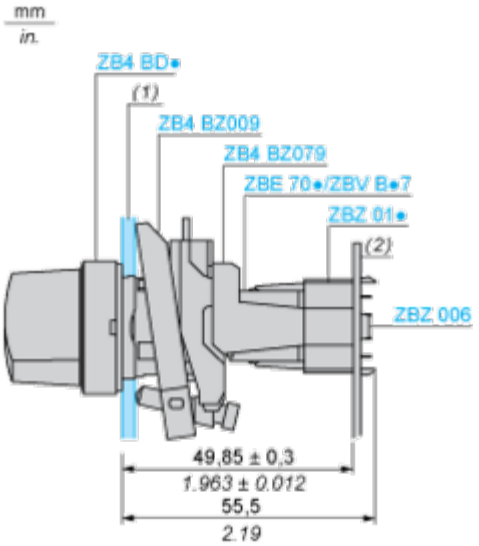

(1) Panel
(2) Printed circuit board

Mounting of Adapter (Socket) ZBZ 01•

- **1** 2 elongated holes for ZBZ 006 screw access
- **2** 1 hole Ø 2.4 mm ± 0.05 / 0.09 in. ± 0.002 for centring adapter ZBZ 01•
- **3** 8 × Ø 1.2 mm / 0.05 in. holes
- **4** 1 hole Ø 2.9 mm ± 0.05 / 0.11 in. ± 0.002, for aligning the printed circuit board (with cut-out marked **a**)
- **5** 1 elongated hole for aligning the printed circuit board (with cut-out marked **b**)
- **6** 4 holes Ø 2.4 mm / 0.09 in. for clipping in adapter ZBZ 01•

Dimensions An + 18.1 relate to the Ø 2.4 mm ± 0.05 / 0.09 in. ± 0.002 holes for centring adapter ZBZ 01•.

Technical Description

Electrical Composition Corresponding to Code C3

Electrical Composition Corresponding to Code C4

Electrical Composition Corresponding to Code C5

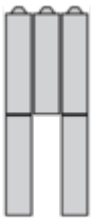

Electrical Composition Corresponding to Code C6

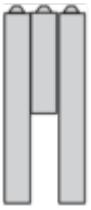

Electrical Composition Corresponding to Code C7

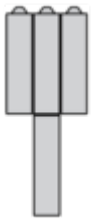

Electrical Composition Corresponding to Code C8

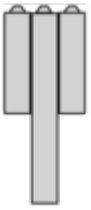

Electrical Composition Corresponding to Codes C9, C11, SF1 and SR1

Legend

Single contact

Double contact

Light block

Possible location

Sequence of Contacts Fitted to 3-position Selector Switch Body

Position 315°

Push	Position	Top			
		Bottom			
	Location		Left	Centre	Right
	State		1	1	0
Contacts	N/O		closed	closed	open
	N/C		open	open	closed

Position 0°

Push	Position	Top			
		Bottom			
	Location		Left	Centre	Right
	State		0	0	0
Contacts	N/O		open	open	open
	N/C		closed	closed	closed

Position 45°

Push	Position	Top			
		Bottom			
	Location		Left	Centre	Right
	State		0	1	1
Contacts	N/O		open	closed	closed
	N/C		closed	open	open

Technical Illustration

Dimensions

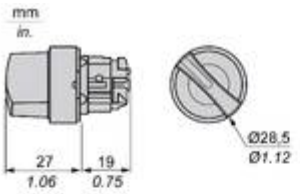

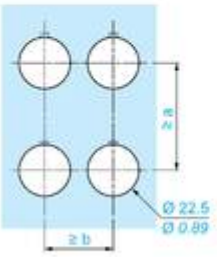

		a (mm)	a (in.)	b (mm)	b (in.)
ZBE●●●●●	ZBV●●●●	40	1.57	30	1.18
ZBE●●●●●3	ZBV●●●●3	45	1.77	32	1.26
ZBE●●●●●4	ZBV●●●●4	40	1.57	30	1.18
ZBE●●●●●5	ZBV●●●●5	50	1.97	30	1.18
ZBE●●●●●9	ZBV●●●●9	40	1.57	30	1.18
ZBRT●	ZBRV1	40	1.57	30	1.18

Offer Marketing Illustration

Product benefits / Features

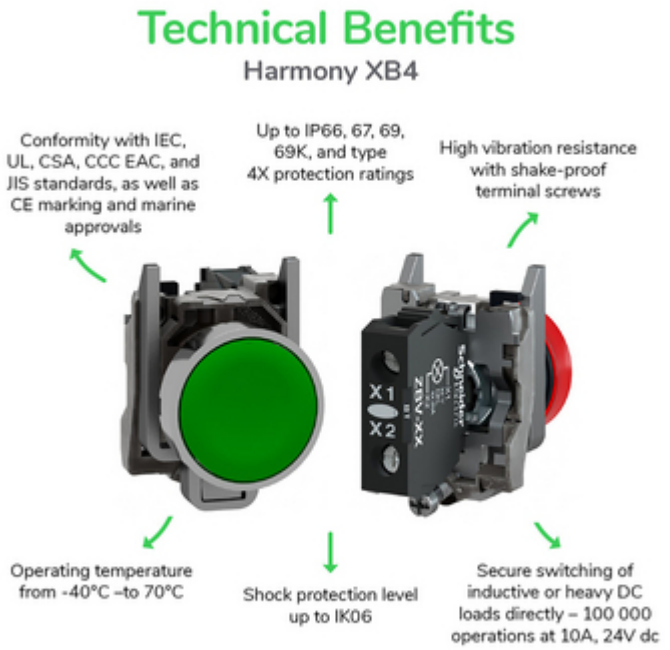

Offer Marketing Illustration

Product benefits / Features

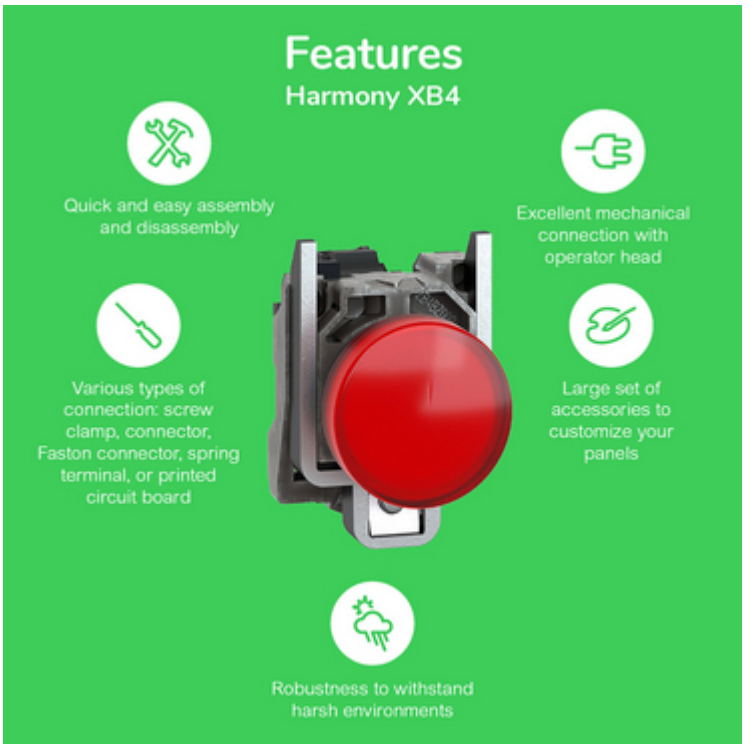

Image of product / Alternate images
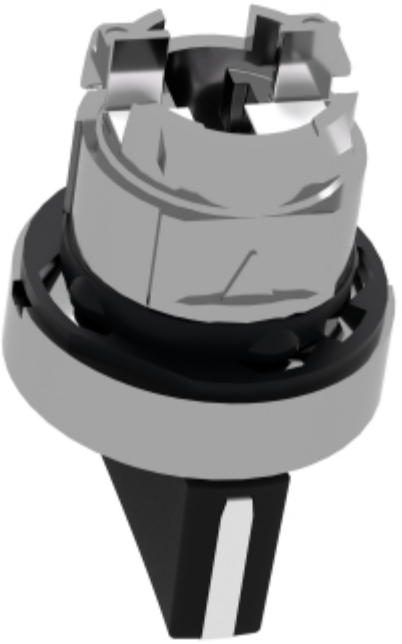
Alternative