Product data sheet

Specifications

Emergency stop head, Harmony XB5, switching off, plastic, red, mushroom 40mm, 22mm, trigger latching push pull

ZB5AT84

Product availability: Stock - Normally stocked in distribution facility

Main

Range of Product	Harmony XB5
Product or Component Type	Head for emergency stop push-button
Product destination	Emergency stop push-button
Device short name	ZB5
Bezel material	Dark grey plastic
Head type	Standard
Mounting diameter	0.9 in (22 mm)
Sale per indivisible quantity	1
Shape of signaling unit head	Round
Type of operator	trigger action and mechanical latching
Reset	Push-pull
Operator profile	Red mushroom Ø 40 mm, unmarked
Device presentation	Basic element

Complementary

CAD overall width	1.6 in (40 mm)
CAD overall height	1.6 in (40 mm)
CAD overall depth	2.2 in (56 mm)
Net Weight	0.11 lb(US) (0.05 kg)
Mechanical durability	300000 cycles
Station name	XALD 1 cut-out XALK 1 cut-out
Electrical composition code	C7 4 single front mounting C8 4 single and double front mounting C11 3 single front mounting C15 1 single front mounting SF1 3 single front mounting SR1 3 single rear mounting C10 4 single and double front mounting
Compatibility code	ZB5

Environment

Protective treatment	TH
Ambient Air Temperature for Storage	-40…158 °F (-40…70 °C)

Price is “List Price” and may be subject to a trade discount – check with your local distributor or retailer for actual price.

Disclaimer: This documentation is not intended as a substitute for and is not to be used for determining suitability or reliability of these products for specific user applications

Ambient Air Temperature for Operation	-40…158 °F (-40…70 °C)
Overvoltage category	Class II conforming to IEC 60536
IP degree of protection	IP66 IEC 60529 IP67 IP69 IP69K
NEMA degree of protection	NEMA 13 NEMA 4X
Resistance to high pressure washer	1015.3 psi (7000000 Pa) 131 °F (55 °C) 0.1 m
IK degree of protection	IK03 conforming to IEC 50102
Standards	ISO 13850 IEC 60947-5-1 CSA C22.2 No 14 IEC 60364-5-53 JIS C8201-5-1 UL 508 IEC 60947-1 GB 14048.5 IEC 60947-5-4 IEC 60947-5-5 IEC 60204-1 JIS C8201-1
Product Certifications	CSA DNV BV LROS (Lloyds register of shipping) UL Listed
Vibration resistance	5 gn (f= 2…500 Hz) conforming to IEC 60068-2-6
Shock resistance	30 gn 18 ms) half sine wave acceleration IEC 60068-2-27 50 gn 11 ms) half sine wave acceleration IEC 60068-2-27

Ordering and shipping details

Category	US10CS222467
Discount Schedule	0CS2
GTIN	3389110907742
Returnability	Yes
Country of origin	CZ

Packing Units

Unit Type of Package 1	PCE
Nbr. of units in pkg.	1
Package 1 Height	1.772 in (4.500 cm)
Package 1 Width	2.126 in (5.400 cm)
Package 1 Length	3.465 in (8.800 cm)
Package weight(Lbs)	1.658 oz (47.000 g)
Unit Type of Package 2	S02
Number of Units in Package 2	42
Package 2 Height	5.906 in (15.000 cm)
Package 2 Width	11.811 in (30.000 cm)
Package 2 Length	15.748 in (40.000 cm)
Package 2 Weight	5.113 lb(US) (2.319 kg)

Unit Type of Package 3	P06
Number of Units in Package 3	672
Package 3 Height	29.528 in (75.000 cm)
Package 3 Width	23.622 in (60.000 cm)
Package 3 Length	31.496 in (80.000 cm)
Package 3 Weight	108.864 lb(US) (49.380 kg)

Contractual warranty

Warranty (in months)	18

Environmental Data

Schneider Electric aims to achieve Net Zero status by 2050 through supply chain partnerships, lower impact materials, and circularity via our ongoing “Use Better, Use Longer, Use Again” campaign to extend product lifetimes and recyclability.

Environmental Data explained >

How we assess product sustainability >

Environmental footprint

Carbon footprint (kg CO2 eq, Total Life cycle)	1
Environmental Disclosure	Product Environmental Profile

Use Better

Materials and Substances

Packaging made with recycled cardboard	Yes
Packaging without single use plastic	Yes
EU RoHS Directive	Pro-active compliance (Product out of EU RoHS legal scope)
REACh Regulation	REACh Declaration
California proposition 65	WARNING: This product can expose you to chemicals including: Di-isodecyl phthalate (DIDP), which is known to the State of California to cause birth defects or other reproductive harm. For more information go to www.P65Warnings.ca.gov

Use Again

Repack and remanufacture

Circularity Profile	End of Life Information
Take-back	No

Dimensions Drawings

Dimensions

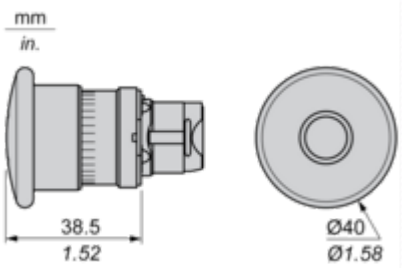

Mounting and Clearance

Panel Cut-out for Pushbuttons, Switches and Pilot Lights (Finished Holes, Ready for Installation)

Connection by Screw Clamp Terminals or Plug-in Connectors or on Printed Circuit Board

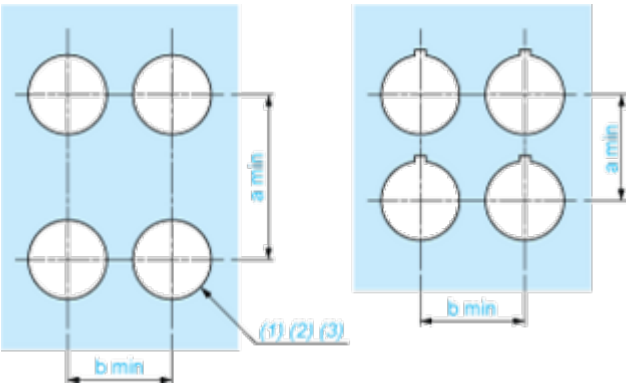

(1) Diameter on finished panel or support
(2) For selector switches and Emergency stop buttons, use of an anti-rotation plate type ZB5AZ902 is recommended.
(3) Ø22.5 mm recommended (Ø22.3 $_{0}^{+0.4}$) / Ø0.89 in. recommended (Ø0.88 in. $_{0}^{+0.016}$)

Connections	a in mm	a in in.	b in mm	b in in.
By screw clamp terminals or plug-in connector	40	1.57	30	1.18
By Faston connectors	45	1.77	32	1.26
On printed circuit board	30	1.18	30	1.18

Detail of Lug Recess

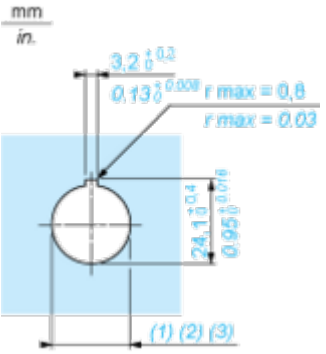

(1) Diameter on finished panel or support
(2) For selector switches and Emergency stop buttons, use of an anti-rotation plate type ZB5AZ902 is recommended.
(3) Ø22.5 mm recommended (Ø22.3 $_{0}^{+0.4}$) / Ø0.89 in. recommended (Ø0.88 in. $_{0}^{+0.016}$)

Pushbuttons, Switches and Pilot Lights for Printed Circuit Board Connection

Panel Cut-outs (Viewed from Installer's Side)

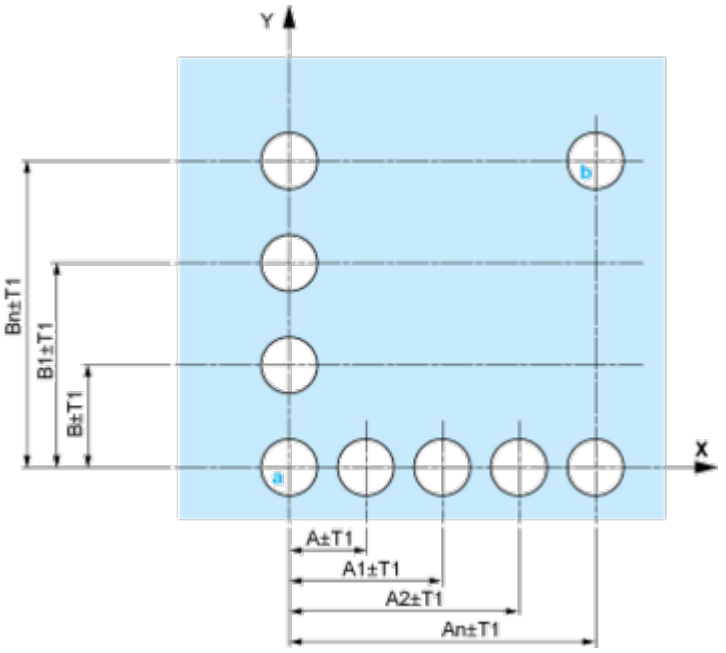

A: 30 mm min. / 1.18 in. min.
B: 40 mm min. / 1.57 in. min.

Printed Circuit Board Cut-outs (Viewed from Electrical Block Side)

Dimensions in mm

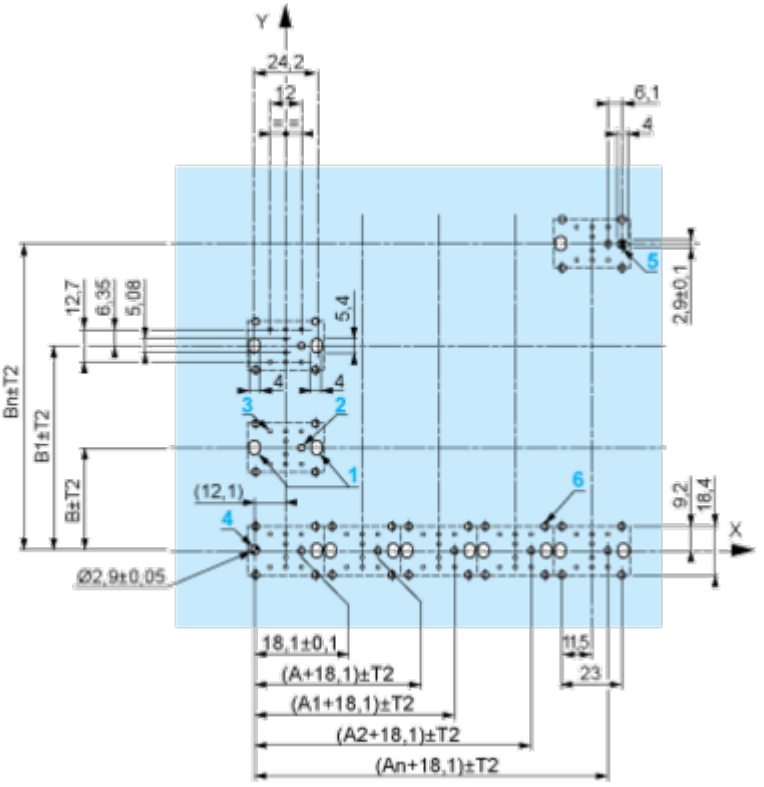

A: 30 mm min.
B: 40 mm min.
Dimensions in in.

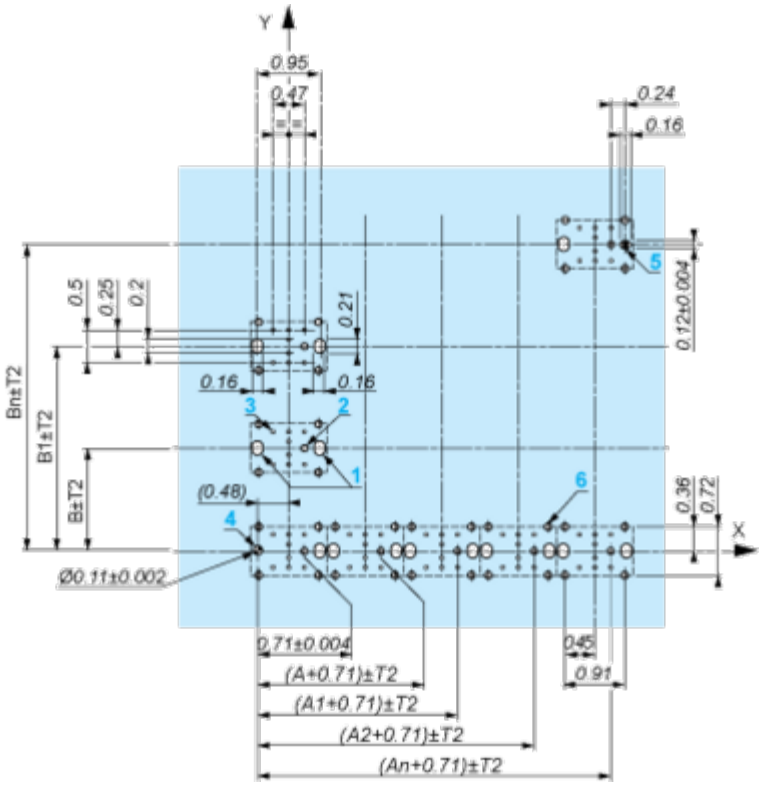

A: 1.18 in. min.
B: 1.57 in. min.

General Tolerances of the Panel and Printed Circuit Board

The cumulative tolerance must not exceed 0.3 mm / 0.012 in.: T1 + T2 = 0.3 mm max.

Installation Precautions

- Minimum thickness of circuit board: 1.6 mm / 0.06 in.
- Cut-out diameter: 22.4 mm ± 0.1 / 0.88 in. ± 0.004
- Orientation of body/fixing collar ZB5AZ009: ± 2°30' (excluding cut-outs marked **a** and **b**).
- Tightening torque of screws ZBZ006: 0.6 N.m (5.3 lbf.in) max.
- Allow for one ZB5AZ079 fixing collar/pillar and its fixing screws:
  - every 90 mm / 3.54 in. horizontally (X), and 120 mm / 4.72 in. vertically (Y).
  - with each selector switch head (ZB5AD•, ZB5AJ•, ZB5AG•).

The fixing centers marked **a** and **b** are diagonally opposed and must align with those marked **4** and **5**.

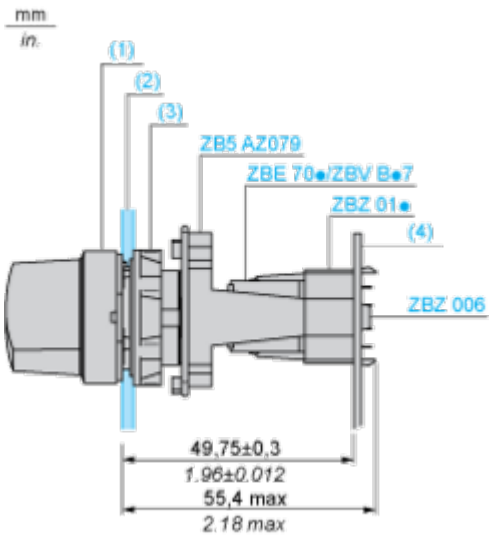

(1) Head ZB5AD•
(2) Panel
(2) Nut
(4) Printed circuit board

Mounting of Adapter (Socket) ZBZ01•

- **1** 2 elongated holes for ZBZ006 screw access
- **2** 1 hole Ø 2.4 mm ± 0.05 / 0.09 in. ± 0.002 for centring adapter ZBZ01•
- **3** 8 × Ø 1.2 mm / 0.05 in. holes
- **4** 1 hole Ø 2.9 mm ± 0.05 / 0.11 in. ± 0.002, for aligning the printed circuit board (with cut-out marked **a**)
- **5** 1 elongated hole for aligning the printed circuit board (with cut-out marked **b**)
- **6** 4 holes Ø 2.4 mm / 0.09 in. for clipping in adapter ZBZ01•

Dimensions An + 18.1 relate to the Ø 2.4 mm ± 0.05 / 0.09 in. ± 0.002 holes for centring adapter ZBZ01•.

Technical Description

Electrical Composition Corresponding to Code C7

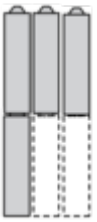

Electrical Compositions Corresponding to Code C8

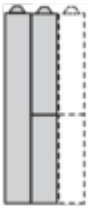

Electrical Compositions Corresponding to Code C10

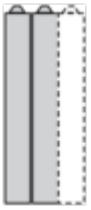

Electrical Composition Corresponding to Codes C9, C11, SF1 and SR1

Electrical Composition Corresponding to Code C15

1 N/O

1 N/C

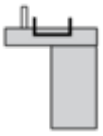

1 N/O + N/C or 1 N/O + N/O or 1 N/C + N/C

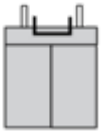

Legend

Single contact

Double contact

Light block

Possible location

Technical Illustration

Dimensions

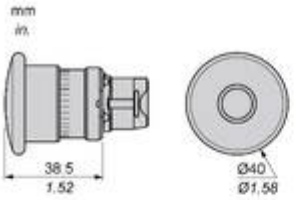

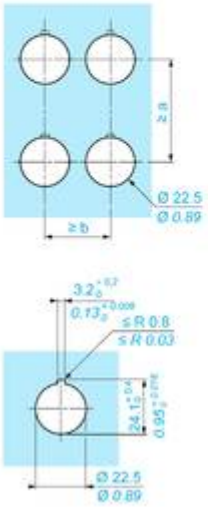

		a (mm)	a (in.)	b (mm)	b (in.)
ZBE●●●●●	ZBV●●●●	40	1.57	30	1.18
ZBE●●●●●3	ZBV●●●●3	45	1.77	32	1.26
ZBE●●●●●4	ZBV●●●●4	40	1.57	30	1.18
ZBE●●●●●5	ZBV●●●●5	50	1.97	30	1.18
ZBE●●●●●9	ZBV●●●●9	40	1.57	30	1.18
ZBRT●	ZBRV1	40	1.57	30	1.18

Offer Marketing Illustration

Product benefits / Features

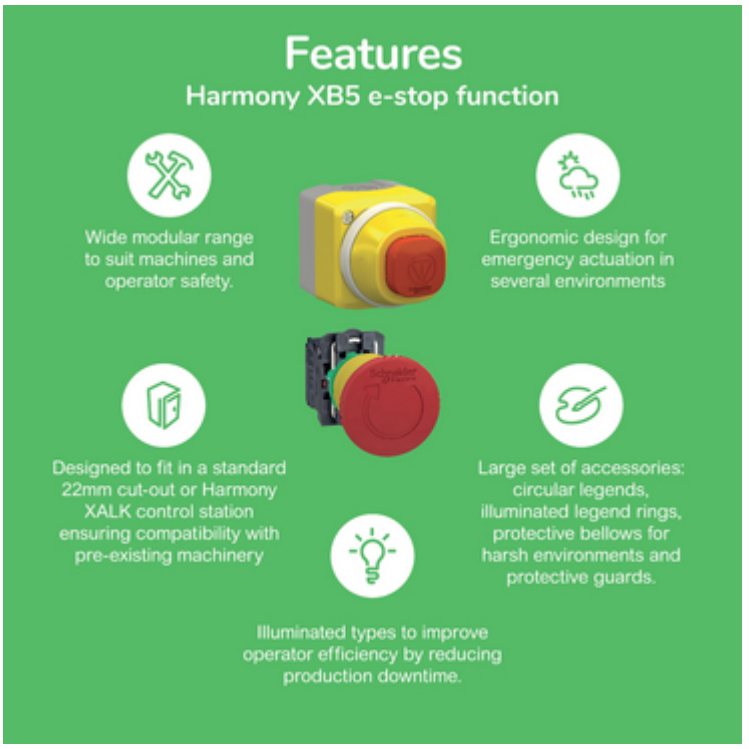

Offer Marketing Illustration

Product benefits / Features

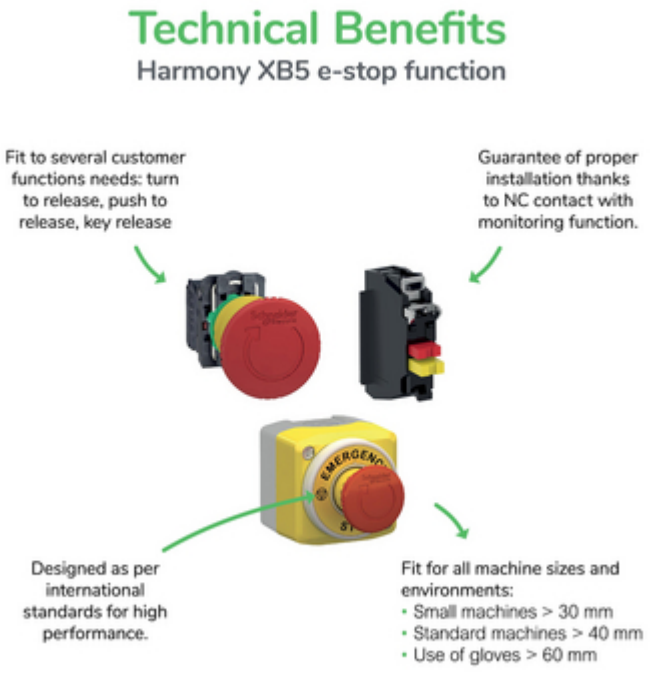

Offer Marketing Illustration

Product benefits / Features

Offer Marketing Illustration

Product benefits / Features

Image of product / Alternate images
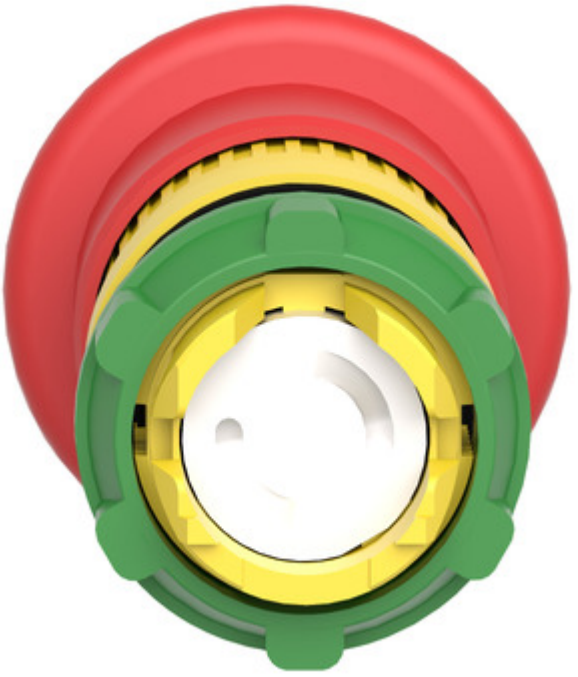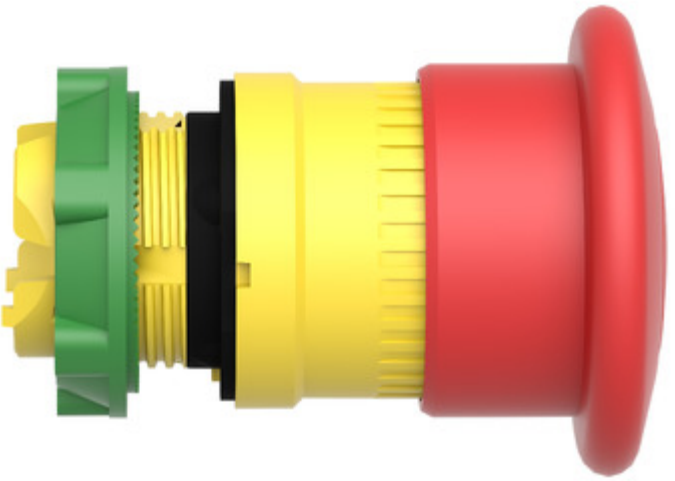
Alternative