Product data sheet

Specifications

miniature plug in relay, Harmony Electromechanical Relays, 6A, 4CO, lockable test but to n, 48V DC

RXM4AB1ED

Product availability: Stock - Normally stocked in distribution facility

Main

Range of Product	Harmony Electromechanical Relays
Series name	RXM series
Product or Component Type	Plug-in relay
Relay Type	Miniature relay
Contacts type and composition	4 C/O
Status LED	Without
Control Type	Lockable test button
[Uc] control circuit voltage	48 V DC
[Ithe] conventional enclosed thermal current	6 A
Continuous output current	5 A

Complementary

[Uimp] rated impulse withstand voltage	2.5 kV 1.2/50 µs
[Ie] rated operational current	3 A 28 V DC) NC IEC 3 A 250 V AC) NC IEC 6 A 28 V DC) NO IEC 6 A 250 V AC) NO IEC 6 A 277 V AC) UL 8 A 30 V DC) UL
Minimum switching capacity	170 mW 10 mA, 17 V
Electrical durability	100000 cycles resistive
Rated operational voltage limits	38.4...52.8 V DC
[Ui] rated insulation voltage	250 V IEC 300 V CSA 300 V UL
Maximum switching voltage	250 V IEC
Drop-out voltage threshold	>= 0.1 Uc
Load current	6 A 250 V AC 6 A 28 V DC
Operating time	20 ms
Maximum switching capacity	1500 VA/168 W
Average resistance	2560 Ohm 20 °C +/- 10 %
Average coil consumption	0.9 W
Mechanical durability	10000000 cycles
Safety reliability data	B10d = 100000

Price is “List Price” and may be subject to a trade discount – check with your local distributor or retailer for actual price.

Disclaimer: This documentation is not intended as a substitute for and is not to be used for determining suitability or reliability of these products for specific user applications

Operating rate	<= 1200 cycles/hour under load <= 18000 cycles/hour no-load
Utilisation coefficient	20 %
CAD overall height	3.1 in (79 mm)
CAD overall depth	3.09 in (78.45 mm)
reset time	20 ms
Dielectric strength	1300 V AC between contacts with micro disconnection 2000 V AC between coil and contact with basic insulation 2000 V AC between poles with basic insulation
Compatibility code	RXM
Protection category	RT I
Pollution degree	2
Operating position	Any position
Test levels	Level A group mounting
Device presentation	Complete product
Contacts material	AgNi
Shape of pin	Flat (faston type)
Net Weight	0.082 lb(US) (0.037 kg)

Environment

Ambient air temperature for operation	-40…131 °F (-40…55 °C)
IP degree of protection	IP40 conforming to IEC 60529
Standards	CSA C22.2 No 14 IEC 61810-1 UL 508
Product Certifications	UL Lloyd's CE CSA GOST IECEE CB Scheme
Ambient Air Temperature for Storage	-40…185 °F (-40…85 °C)
Vibration resistance	3 gn +/- 1 mm 10…150 Hz)5 cycles in operation 5 gn +/- 1 mm 10…150 Hz)5 cycles not operating
Shock resistance	10 gnin operation 30 gnnot operating

Ordering and shipping details

Category	US10CP221127
Discount Schedule	0CP2
GTIN	3389119403733
Returnability	Yes
Country of origin	CN

Packing Units

Unit Type of Package 1	PCE
Nbr. of units in pkg.	1

Package 1 Height	0.827 in (2.100 cm)
Package 1 Width	1.102 in (2.800 cm)
Package 1 Length	1.890 in (4.800 cm)
Package weight(Lbs)	1.235 oz (35.000 g)
Unit Type of Package 2	BB1
Number of Units in Package 2	10
Package 2 Height	1.220 in (3.100 cm)
Package 2 Width	4.055 in (10.300 cm)
Package 2 Length	4.764 in (12.100 cm)
Package 2 Weight	13.263 oz (376.000 g)
Unit Type of Package 3	S02
Number of Units in Package 3	240
Package 3 Height	5.906 in (15.000 cm)
Package 3 Width	11.811 in (30.000 cm)
Package 3 Length	15.748 in (40.000 cm)
Package 3 Weight	20.911 lb(US) (9.485 kg)

Contractual warranty

Warranty	18 months

Environmental Data

Schneider Electric aims to achieve Net Zero status by 2050 through supply chain partnerships, lower impact materials, and circularity via our ongoing “Use Better, Use Longer, Use Again” campaign to extend product lifetimes and recyclability.

Environmental Data explained

How we assess product sustainability

Environmental footprint

Carbon footprint (kg CO2 eq, Total Life cycle)	**14**
Environmental Disclosure	**Product Environmental Profile**

Use Better

Materials and Substances

Packaging made with recycled cardboard	**Yes**
Packaging without single use plastic	**Yes**
EU RoHS Directive	**Pro-active compliance (Product out of EU RoHS legal scope)**
REACh Regulation	**REACh Declaration**
California proposition 65	**WARNING: This product can expose you to chemicals including: Nickel compounds, which is known to the State of California to cause cancer, and Di-isodecyl phthalate (DIDP), which is known to the State of California to cause birth defects or other reproductive harm. For more information go to www.P65Warnings.ca.gov**

Use Again

Repack and remanufacture

Circularity Profile	**End of Life Information**
Take-back	**No**

Dimensions Drawings

Dimensions

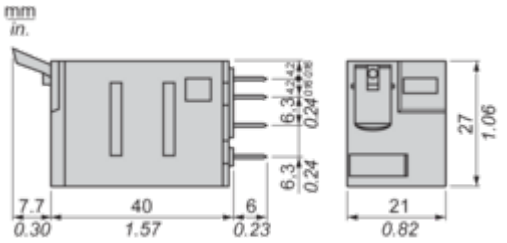

Pin Side View

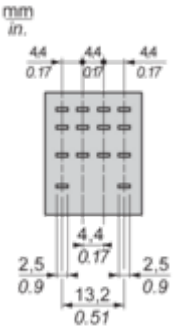

Connections and Schema

Wiring Diagram

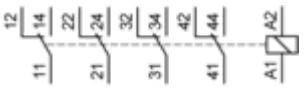

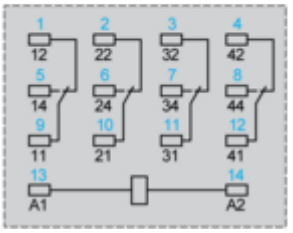

Symbols shown in blue correspond to Nema marking.

Performance Curves

Electrical Durability of Contacts

Durability (inductive load) = durability (resistive load) x reduction coefficient.
Resistive AC load

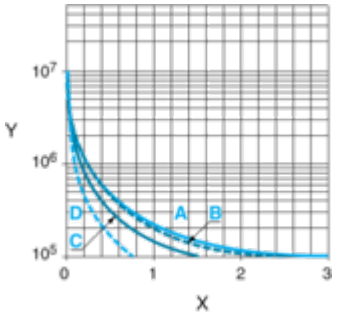

X Switching capacity (kVA)
Y Durability (Number of operating cycles)
A RXM2AB•••
B RXM3AB•••
C RXM4AB•••
D RXM4GB•••

Reduction coefficient for inductive AC load (depending on power factor cos ϕ)

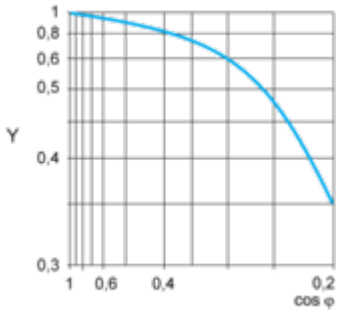

Y Reduction coefficient (A)

Maximum switching capacity on resistive DC load

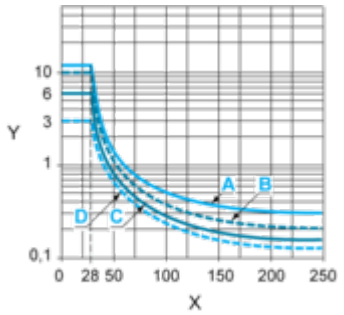

X Voltage DC
Y Current DC
A RXM2AB•••
B RXM3AB•••
C RXM4AB•••
D RXM4GB•••
Note : These are typical curves, actual durability depends on load, environment, duty cycle, etc.
For inductive load, to increase relay life cycles, please add a proper load protection circuit (eg: RC protection/Varistor/ free Wheeling diode -DC load only-).
For low level loads (below 10mA), we recommend to use RXM*GB series with bifurcated contacts relays instead.

Coil Operating Range

DC Coil Operating Range VS Ambient Temperature

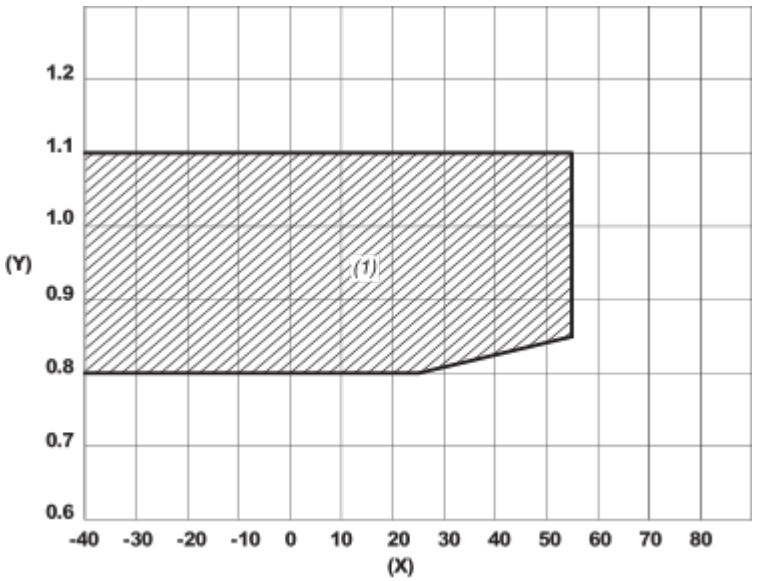

X : Ambient temperature (°C)
Y : AC coil voltage (U/Uc)
(1) Permitted operating range area

Technical Illustration

Dimensions

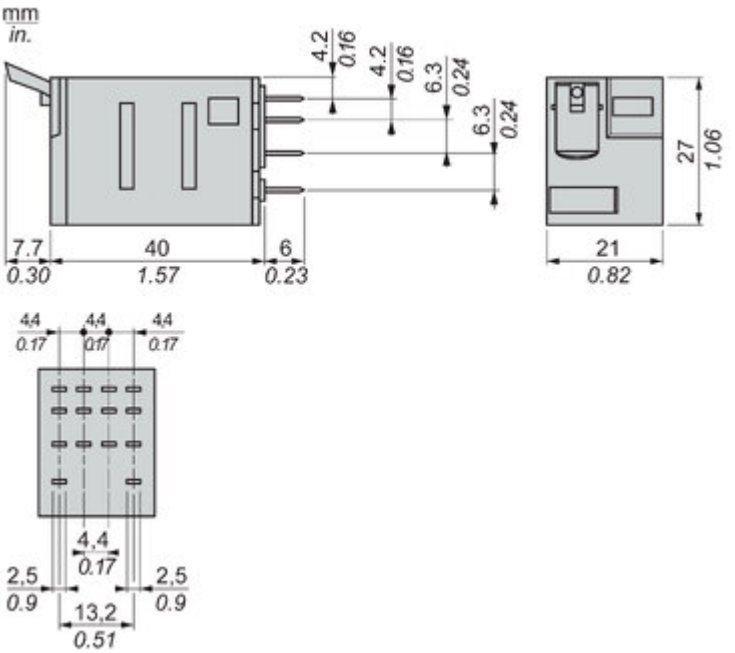

Offer Marketing Illustration

Product benefits / Features

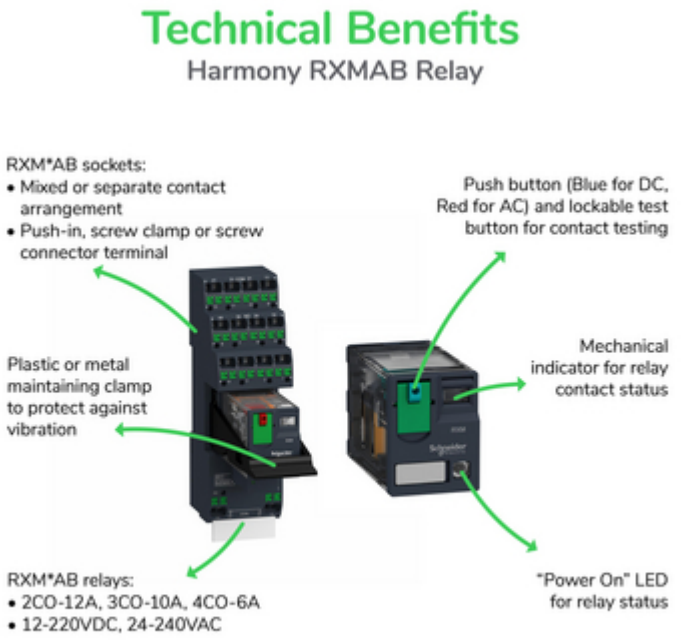

Offer Marketing Illustration

Product benefits / Features

Image of product / Alternate images

Alternative

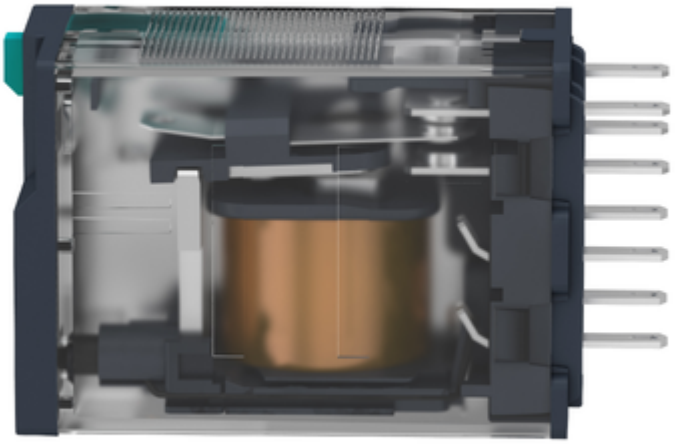

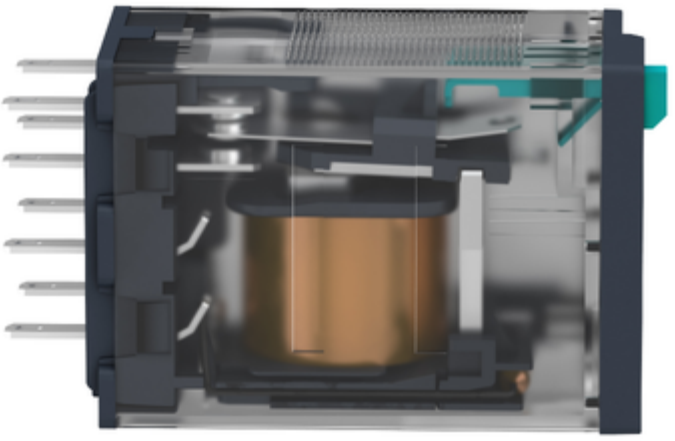

RXM
24 VDC
Schneider
Electric

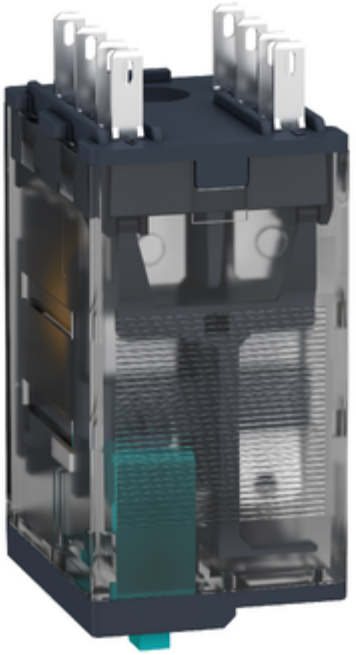

1
4
5
8
9
12
13
14