# Product data sheet

Specifications

## Head for non illuminated push button, Harmony XB4, blue mushroom 30mm, 22mm, spring return, unmarked

ZB4BC64

**Product availability: Non-Stock - Not normally stocked in distribution facility**

## Main

| | |
|---|---|
| **Range of Product** | Harmony XB4 |
| **Product or Component Type** | Head for non-illuminated push-button |
| **Device short name** | ZB4 |
| **Bezel material** | Chromium plated metal |
| **Mounting diameter** | 0.9 in (22 mm) |
| **Sale per indivisible quantity** | 1 |
| **Head type** | Standard |
| **Shape of signaling unit head** | Round |
| **Type of operator** | spring return |
| **Operator profile** | Blue mushroom Ø 30 mm, unmarked |
| **Cap/operator or lens colour** | Blue |

## Complementary

| | |
|---|---|
| **CAD overall width** | 1.2 in (30 mm) |
| **CAD overall height** | 1.2 in (30 mm) |
| **CAD overall depth** | 2.05 in (52 mm) |
| **Mechanical durability** | 5000000 cycles |
| **Electrical composition code** | C1 9 single front mounting<br>C2 9 single and double front mounting<br>C11 3 single front mounting<br>C15 1 single front mounting |
| **Device presentation** | Basic element |

## Environment

| | |
|---|---|
| **Protective treatment** | TH |
| **Ambient Air Temperature for Storage** | -40…158 °F (-40…70 °C) |
| **Ambient air temperature for operation** | -40…158 °F (-40…70 °C) |
| **Overvoltage category** | Class I conforming to IEC 60536 |
| **IP degree of protection** | IP66 IEC 60529<br>IP69<br>IP69K |
| **NEMA degree of protection** | NEMA 13<br>NEMA 4X |

Price is “List Price” and may be subject to a trade discount – check with your local distributor or retailer for actual price.

Disclaimer: This documentation is not intended as a substitute for and is not to be used for determining suitability or reliability of these products for specific user applications

| | |
|---|---|
| **IK degree of protection** | IK06 conforming to IEC 50102 |
| **Standards** | EN/IEC 60947-5-4<br>EN/IEC 60947-5-1<br>UL 508<br>EN/IEC 60947-5-5<br>CSA C22.2 No 14<br>JIS C8201-5-1<br>EN/IEC 60947-1<br>JIS C8201-1 |
| **Product Certifications** | BV<br>CSA<br>DNV<br>LROS (Lloyds register of shipping)<br>UL Listed |
| **Vibration resistance** | 5 gn (f= 2…500 Hz) conforming to IEC 60068-2-6 |
| **Shock resistance** | 30 gn 18 ms) half sine wave acceleration IEC 60068-2-27<br>50 gn 11 ms) half sine wave acceleration IEC 60068-2-27 |

## Ordering and shipping details

| | |
|---|---|
| **Category** | US10CS222468 |
| **Discount Schedule** | 0CS2 |
| **GTIN** | 3389110888423 |
| **Returnability** | Yes |
| **Country of origin** | CZ |

## Packing Units

| | |
|---|---|
| **Unit Type of Package 1** | PCE |
| **Nbr. of units in pkg.** | 1 |
| **Package 1 Height** | 3.465 in (8.800 cm) |
| **Package 1 Width** | 1.693 in (4.300 cm) |
| **Package 1 Length** | 2.126 in (5.400 cm) |
| **Package weight(Lbs)** | 2.646 oz (75.000 g) |
| **Unit Type of Package 2** | S02 |
| **Number of Units in Package 2** | 42 |
| **Package 2 Height** | 5.906 in (15.000 cm) |
| **Package 2 Width** | 11.811 in (30.000 cm) |
| **Package 2 Length** | 15.748 in (40.000 cm) |
| **Package 2 Weight** | 7.531 lb(US) (3.416 kg) |

## Contractual warranty

| | |
|---|---|
| **Warranty** | 18 months |

## Environmental Data

Schneider Electric aims to achieve Net Zero status by 2050 through supply chain partnerships, lower impact materials, and circularity via our ongoing “Use Better, Use Longer, Use Again” campaign to extend product lifetimes and recyclability.

Environmental Data explained >

How we assess product sustainability >

### Environmental footprint

| | |
|---|---|
| Carbon footprint (kg CO2 eq, Total Life cycle) | 1 |
| Environmental Disclosure | Product Environmental Profile |

## Use Better

### Materials and Substances

| | |
|---|---|
| Packaging made with recycled cardboard | Yes |
| Packaging without single use plastic | Yes |
| EU RoHS Directive | Pro-active compliance (Product out of EU RoHS legal scope) |
| REACh Regulation | REACh Declaration |
| California proposition 65 | WARNING: This product can expose you to chemicals including: Di-isodecyl phthalate (DIDP), which is known to the State of California to cause birth defects or other reproductive harm. For more information go to www.P65Warnings.ca.gov |

## Use Again

### Repack and remanufacture

| | |
|---|---|
| Circularity Profile | End of Life Information |
| Take-back | No |

Dimensions Drawings

## Dimensions

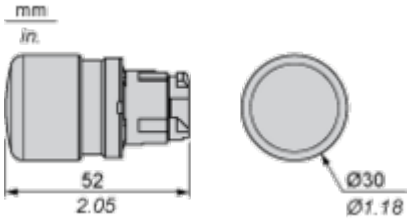

## Mounting and Clearance

### Panel Cut-out for Pushbuttons, Switches and Pilot Lights (Finished Holes, Ready for Installation)

| Connection by Screw Clamp Terminals or Plug-in Connectors or on Printed Circuit Board | Connection by Faston Connectors |
|---|---|
| 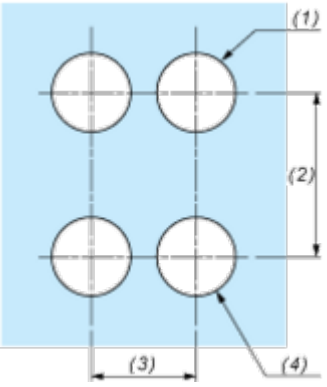 | 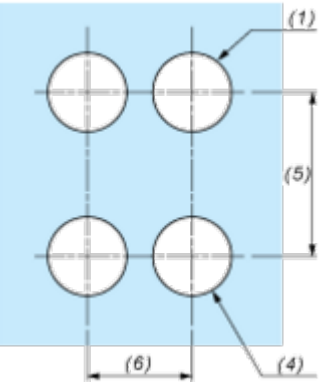 |

**(1)** Diameter on finished panel or support
**(2)** 40 mm min. / 1.57 in. min.
**(3)** 30 mm min. / 1.18 in. min.
**(4)** Ø 22.5 mm / 0.89 in. recommended (Ø 22.3 mm $_{0}^{+0.4}$ / 0.88 in. $_{0}^{+0.016}$)
**(5)** 45 mm min. / 1.78 in. min.
**(6)** 32 mm min. / 1.26 in. min.

## Pushbuttons, Switches and Pilot Lights for Printed Circuit Board Connection

### Panel Cut-outs (Viewed from Installer's Side)

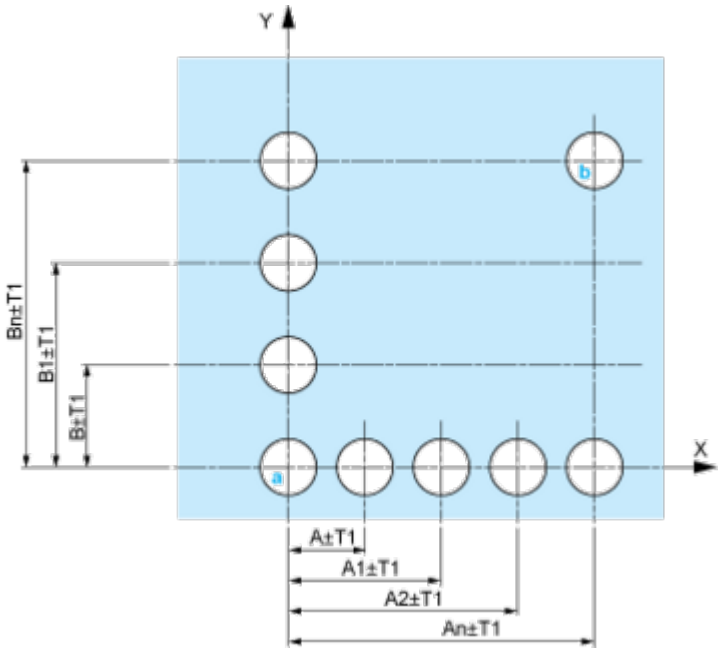


**A:** 30 mm min. / 1.18 in. min.
**B:** 40 mm min. / 1.57 in. min.

### Printed Circuit Board Cut-outs (Viewed from Electrical Block Side)

Dimensions in mm

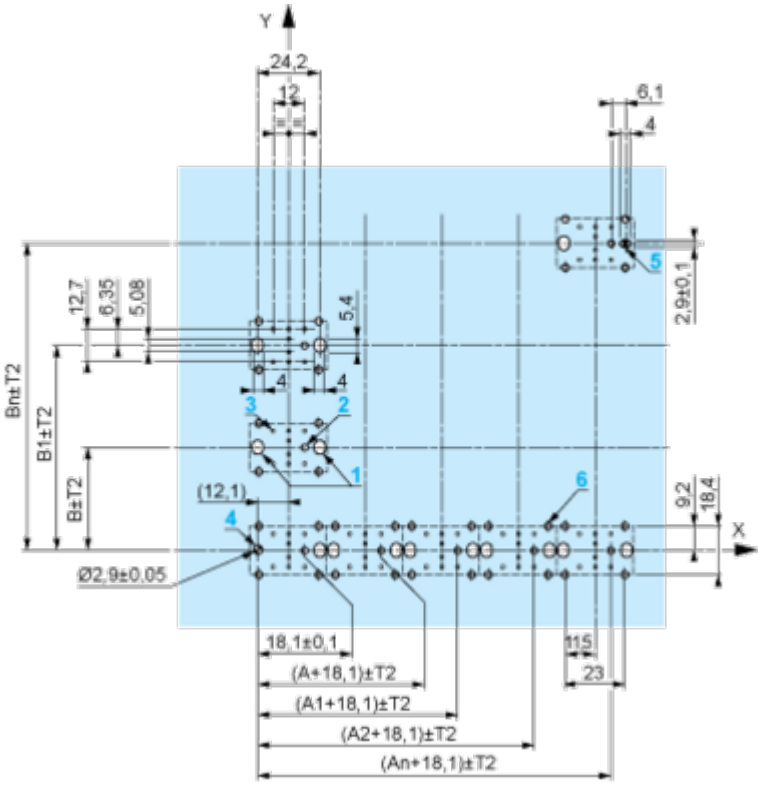


**A:** 30 mm min.
**B:** 40 mm min.
Dimensions in in.

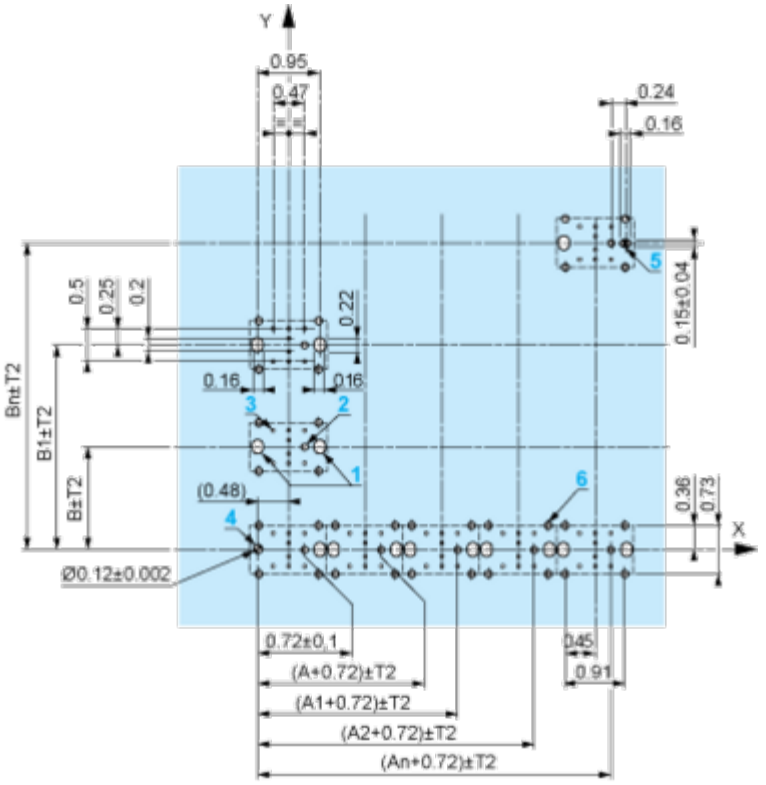


**A:** 1.18 in. min.
**B:** 1.57 in. min.

### General Tolerances of the Panel and Printed Circuit Board

The cumulative tolerance must not exceed 0.3 mm / 0.012 in: T1 + T2 = 0.3 mm max.

### Installation Precautions

- Minimum thickness of circuit board: 1.6 mm / 0.06 in.
- Cut-out diameter: 22.4 mm ± 0.1 / 0.88 in. ± 0.004
- Orientation of body/fixing collar ZB4 BZ009: ± 2°30' (excluding cut-outs marked **a** and **b**).
- Tightening torque of screws ZBZ 006: 0.6 N.m (5.3 lbf.in) max.
- Allow for one ZB4 BZ079 fixing collar/pillar and its fixing screws:
  - every 90 mm / 3.54 in. horizontally (X), and 120 mm / 4.72 in. vertically (Y).
  - with each selector switch head (ZB4 BD•, ZB4 BJ•, ZB4 BG•).

The fixing centers marked **a** and **b** are diagonally opposed and must align with those marked **4** and **5**.

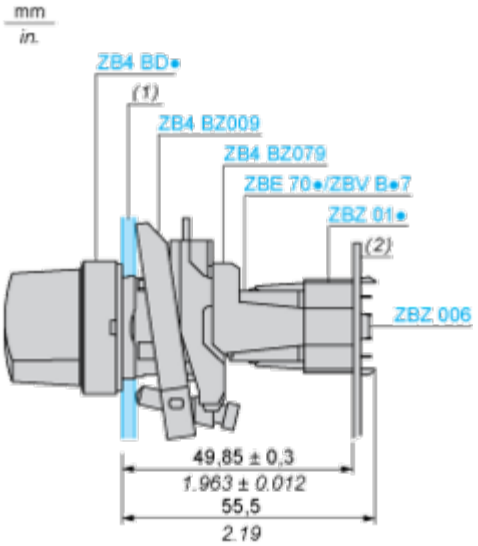


**(1)** Panel
**(2)** Printed circuit board

### Mounting of Adapter (Socket) ZBZ 01•

- **1** 2 elongated holes for ZBZ 006 screw access
- **2** 1 hole Ø 2.4 mm ± 0.05 / 0.09 in. ± 0.002 for centring adapter ZBZ 01•
- **3** 8 × Ø 1.2 mm / 0.05 in. holes
- **4** 1 hole Ø 2.9 mm ± 0.05 / 0.11 in. ± 0.002, for aligning the printed circuit board (with cut-out marked **a**)
- **5** 1 elongated hole for aligning the printed circuit board (with cut-out marked **b**)
- **6** 4 holes Ø 2.4 mm / 0.09 in. for clipping in adapter ZBZ 01•

Dimensions An + 18.1 relate to the Ø 2.4 mm ± 0.05 / 0.09 in. ± 0.002 holes for centring adapter ZBZ 01•.

Technical Description

## Electrical Composition Corresponding to Code C1

## Electrical Composition Corresponding to Code C2

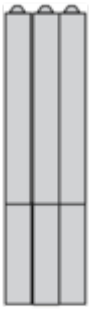

## Electrical Composition Corresponding to Codes C9, C11, SF1 and SR1

## Electrical Composition Corresponding to Code C15

1 N/O

1 N/C

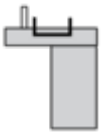

1 N/O + N/C or 1 N/O + N/O or 1 N/C + N/C

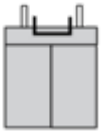

## Legend

Single contact

Double contact

Light block

Possible location

Technical Illustration

## Dimensions

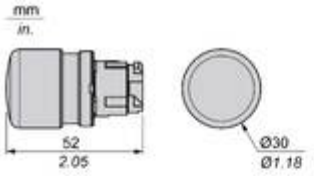


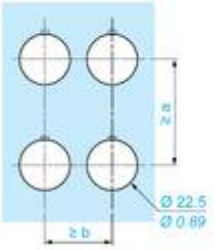


| | | a (mm) | a (in.) | b (mm) | b (in.) |
|---|---|---|---|---|---|
| ZBE●●●●● | ZBV●●●● | 40 | 1.57 | 30 | 1.18 |
| ZBE●●●●●3 | ZBV●●●●3 | 45 | 1.77 | 32 | 1.26 |
| ZBE●●●●●4 | ZBV●●●●4 | 40 | 1.57 | 30 | 1.18 |
| ZBE●●●●●5 | ZBV●●●●5 | 50 | 1.97 | 30 | 1.18 |
| ZBE●●●●●9 | ZBV●●●●9 | 40 | 1.57 | 30 | 1.18 |
| ZBRT● | ZBRV1 | 40 | 1.57 | 30 | 1.18 |