Product data sheet

Specifications

Die cast empty control station, Harmony XAP, XB2 SL, zinc alloy, grey, M20, 1 cut out 22mm, 80x80x51,5mm, UL cULus

XAPD1201

Product availability: Stock - Normally stocked in distribution facility

Main

Range of Product	Harmony XAP
Product or Component Type	Die-cast empty control station
Device short name	XAPD
Product destination	For Ø 22 mm control and signalling units
Product front plate size	80 x 80 mm
Usable depth	1.9 in (49 mm)
Number of cut-out	1 cut-out
Colour of base of enclosure	Grey RAL 7035)
Colour of cover	Grey RAL 7035)
Material	Die cast zinc
Sale per indivisible quantity	1
IP degree of protection	IP65 EN/IEC 60529 and EN/IEC 60947-5-1 IP66 EN/IEC 60529 and EN/IEC 60947-5-1 IP69 EN/IEC 60529 and EN/IEC 60947-5-1

Complementary

Number of vertical rows	1
Number of horizontal rows	1
Cut-out dimensions	Ø 22 mm
Control station type	Metal
Cable entry	2 x cable gland ISO
Thread type	M20 x 1.5
CAD overall width	3.1 in (80 mm)
CAD overall height	3.1 in (80 mm)
CAD overall depth	2.03 in (51.5 mm)
Net Weight	1.003 lb(US) (0.455 kg)

Environment

Protective treatment	TC
Ambient Air Temperature for Storage	-40…158 °F (-40…70 °C)
Ambient air temperature for operation	-13…158 °F (-25…70 °C)

Price is “List Price” and may be subject to a trade discount – check with your local distributor or retailer for actual price.

Disclaimer: This documentation is not intended as a substitute for and is not to be used for determining suitability or reliability of these products for specific user applications

Electrical shock protection class	Class I conforming to IEC 61140
Degree of protection	UL type 4 UL 50 E UL type 4X UL 50 E
IK degree of protection	IK07 IEC 62262
Resistance to chemical agents	Special treatment can be obtained on request
Product Certifications	UL cULus EAC

Ordering and shipping details

Category	US10CS222475
Discount Schedule	0CS2
GTIN	3389118039759
Returnability	Yes
Country of origin	MA

Packing Units

Unit Type of Package 1	PCE
Nbr. of units in pkg.	1
Package 1 Height	3.543 in (9.000 cm)
Package 1 Width	3.465 in (8.800 cm)
Package 1 Length	3.150 in (8.000 cm)
Package weight(Lbs)	19.224 oz (545.000 g)
Unit Type of Package 2	S02
Number of Units in Package 2	12
Package 2 Height	5.906 in (15.000 cm)
Package 2 Width	11.811 in (30.000 cm)
Package 2 Length	15.748 in (40.000 cm)
Package 2 Weight	15.117 lb(US) (6.857 kg)
Unit Type of Package 3	P06
Number of Units in Package 3	192
Package 3 Height	29.528 in (75.000 cm)
Package 3 Width	23.622 in (60.000 cm)
Package 3 Length	31.496 in (80.000 cm)
Package 3 Weight	260.613 lb(US) (118.212 kg)

Environmental Data

Schneider Electric aims to achieve Net Zero status by 2050 through supply chain partnerships, lower impact materials, and circularity via our ongoing “Use Better, Use Longer, Use Again” campaign to extend product lifetimes and recyclability.

Environmental Data explained >

How we assess product sustainability >

Environmental footprint

Carbon footprint (kg CO2 eq, Total Life cycle)	3
Environmental Disclosure	Product Environmental Profile

Use Better

Materials and Substances

Packaging made with recycled cardboard	Yes
Packaging without single use plastic	Yes
EU RoHS Directive	Pro-active compliance (Product out of EU RoHS legal scope)
REACh Regulation	REACh Declaration
California proposition 65	WARNING: This product can expose you to chemicals including: Lead and lead compounds, which is known to the State of California to cause cancer and birth defects or other reproductive harm. For more information go to www.P65Warnings.ca.gov

Use Again

Repack and remanufacture

Circularity Profile	No need of specific recycling operations
Take-back	No

Dimensions Drawings

Dimensions and Fixing

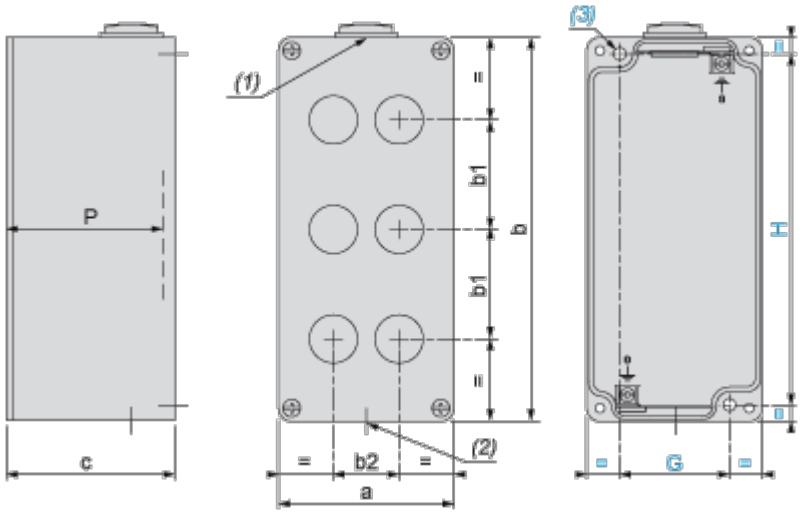

(1) : 1 hole, with blanking plug (protrusion 6 mm/0.24 in.), for cable gland ISO M20 x 1.5

(2) : 1 hole, without blanking plug, for cable gland ISO M20 x 1.5

(3) : 2 x Ø 5.6 mm/0.22 in. holes, depth 19 mm/0.75 in.

P : Usable depth

a		b		c		G		H		P	
mm	in.	mm	in.	mm	in.	mm	in.	mm	in.	mm	in.
80	3.15	80	3.15	51.5	2.03	50	1.97	65	2.56	49	1.93

1 hole in the center, Cut-out interaxis 22.5 mm ±0.2 mm / 0.885 in. ± 0.0078 in. dimensions (vertical mounting)

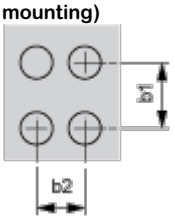

b1 Vertical interaxis: In the center of the box

b2 Horizontal interaxis: In the center of the box

Technical Illustration

Dimensions

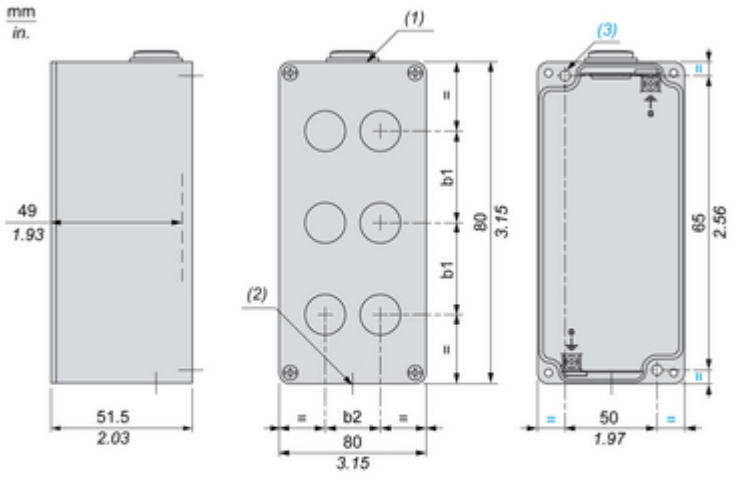

(1) 1 hole (with plug, 6 mm / 0.24 in. protrusion), for cable gland ISO M20 x 1.5
(2) 1 hole (no plug) for cable gland ISO M20 x 1.5
(3) 2 holes Ø5.6 mm / 0.22 in., depth 19 mm / 0.75 in.
(b1) Vertical interaxis: Centered in box
(b2) Horizontal interaxis: Centered in box

Offer Marketing Illustration

Product benefits / Features

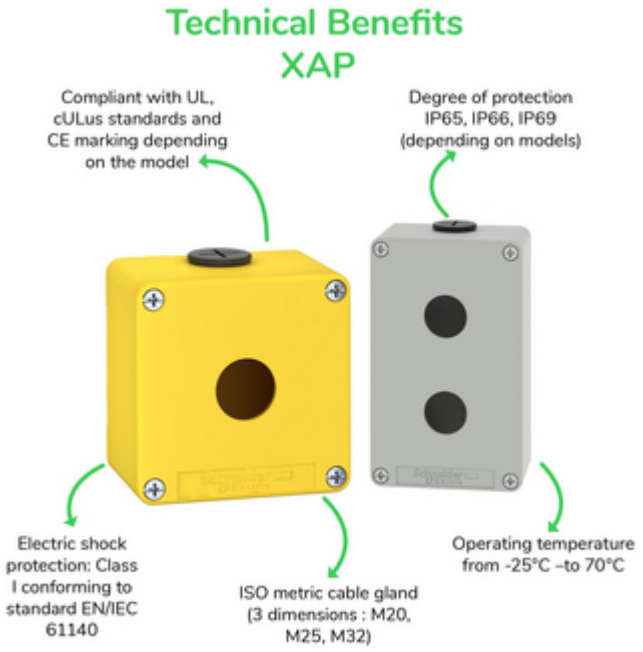

Offer Marketing Illustration

Product benefits / Features

Image of product / Alternate images

Alternative

50-
31
32
65
9
16
2 Ø 5.6
7
DIA
32