Product data sheet

Specifications

Panelboard enclosure box, NQ/NF, Type 3R/5/12, 20in W x 32in H x 6.5in D

MH32WP

Product availability: Stock - Normally stocked in distribution facility

Main

Product	Enclosure

Complementary

Material	Steel
Height	32 in (812.8 mm)
Width	20 in (508 mm)
Depth	6.5 in (165.1 mm)
Device mounting	Surface
Tightening torque	3 N.m

Environment

Enclosure Rating	NEMA 3R/5/12
Product Certifications	cULus

Ordering and shipping details

Category	US1PE1A00110
Discount Schedule	PE1A
GTIN	785901056782
Returnability	Yes
Country of origin	MX

Packing Units

Unit Type of Package 1	PCE
Nbr. of units in pkg.	1
Package 1 Height	6.9 in (17.5 cm)
Package 1 Width	21.3 in (54.1 cm)
Package 1 Length	33.7 in (85.6 cm)
Package weight(Lbs)	59.00 lb(US) (26.76 kg)
Unit Type of Package 2	PAL
Number of Units in Package 2	8
Package 2 Height	40.0 in (101.6 cm)
Package 2 Width	40.0 in (101.6 cm)

Price is “List Price” and may be subject to a trade discount – check with your local distributor or retailer for actual price.

Disclaimer: This documentation is not intended as a substitute for and is not to be used for determining suitability or reliability of these products for specific user applications

Package 2 Length	48.00 in (121.92 cm)
Package 2 Weight	464.417 lb(US) (210.656 kg)

Contractual warranty

Warranty (in months)	18

Environmental Data

Schneider Electric aims to achieve Net Zero status by 2050 through supply chain partnerships, lower impact materials, and circularity via our ongoing “Use Better, Use Longer, Use Again” campaign to extend product lifetimes and recyclability.

Environmental Data explained >

How we assess product sustainability >

Environmental footprint

Carbon footprint (kg CO2 eq, Total Life cycle)	219
Environmental Disclosure	Product Environmental Profile

Use Better

Materials and Substances

Packaging made with recycled cardboard	No
Packaging without single use plastic	No
EU RoHS Directive	Compliant
REACh Regulation	REACh Declaration
California proposition 65	WARNING: This product can expose you to chemicals including: Nickel compounds, which is known to the State of California to cause cancer, and Bisphenol A (BPA), which is known to the State of California to cause birth defects or other reproductive harm. For more information go to www.P65Warnings.ca.gov

Use Longer

Lifetime extension

Repair	No

Use Again

Repack and remanufacture

Circularity Profile	No need of specific recycling operations
Take-back	No

Dimensions Drawings

Approximate Dimensions

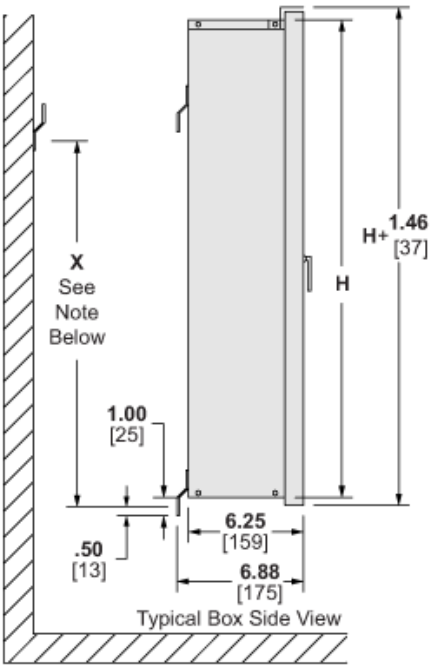

Typical Box Side View

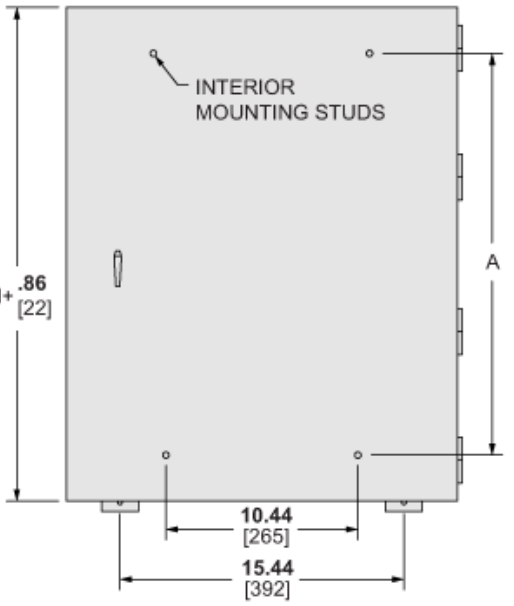

Typical Front View

in.
[mm]

CATALOG NUMBER	BOX HEIGHT		MOUNTING INTERIOR HEIGHT	
	H		A	
	IN	MM	IN	MM
MH26WP	26.00	660	21.00	533
MH32WP	32.00	813	27.00	686
MH38WP	38.00	965	33.00	838
MH44WP	44.00	1118	39.00	991
MH50WP	50.00	1270	45.00	1143
MH56WP	56.00	1422	51.00	1295
MH62WP	62.00	1575	57.00	1448
MH68WP	68.00	1727	63.00	1600
MH74WP	74.00	1880	69.00	1753
MH80WP	80.00	2032	75.00	1905
MH86WP	86.00	2184	81.00	2057

NOTE: FOR "X" DIMENSION,
SUBTRACT 6.60/[168] FROM THE BOX HEIGHT.

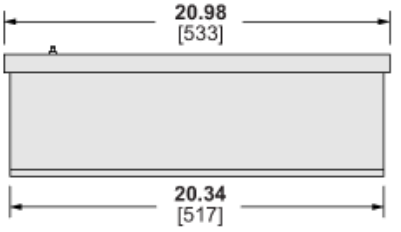

Typical Endwall

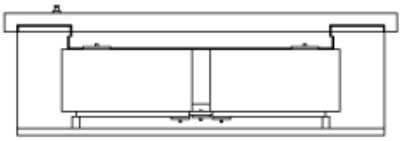

Typical Mounting of QO/QOB Circuit Breakers

Technical Illustration

Dimensions

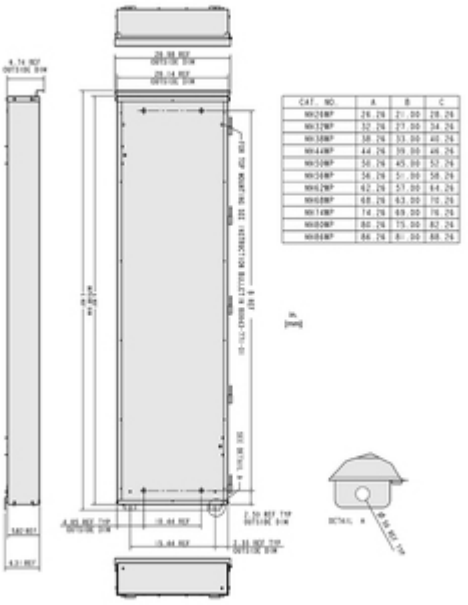

CAT. NO.	A	B	C
MH20WP	26.26	21.00	28.26
MH32WP	32.26	27.00	34.26
MH38WP	38.26	33.00	40.26
MH44WP	44.26	39.00	46.26
MH50WP	50.26	45.00	52.26
MH56WP	56.26	51.00	58.26
MH62WP	62.26	57.00	64.26
MH68WP	68.26	63.00	70.26
MH74WP	74.26	69.00	76.26
MH80WP	80.26	75.00	82.26
MH86WP	86.26	81.00	88.26