Product data sheet

Specifications

Capacitor contactor, TeSys Deca, 30 kVAR at 400 V/50 Hz, coil 110 V AC 50/60 Hz

LC1DPKF7

Product availability: Non-Stock - Not normally stocked in distribution facility

Main

Range	TeSys TeSys Deca
Product name	TeSys LC1D.K TeSys Deca
Product or Component Type	Capacitor duty contactor
Device short name	LC1DPK
Device Application	Control
Contactor application	Power factor correction
Utilisation category	AC-6b
Poles description	3P
power pole contact composition	3 NO
Device location in system	Inside delta interruption Line interruption
[Ue] rated operational voltage	Power circuit 690 V AC 50/60 Hz
Reactive power rating	17 kvar 230 V AC 50 Hz 140 °F (60 °C) 30 kvar 400 V AC 50 Hz 140 °F (60 °C) 32 kvar 440 V AC 50 Hz 140 °F (60 °C) 50 kvar 690 V AC 50 Hz 140 °F (60 °C) 16.5 kvar 230 V AC 60 Hz 140 °F (60 °C) 33.3 kvar 460 V AC 60 Hz 140 °F (60 °C) 40 kvar 575 V AC 60 Hz 140 °F (60 °C)
Control circuit type	AC 50/60 Hz
[Uc] control circuit voltage	110 V AC 50/60 Hz
Auxiliary contact composition	1 NO + 2 NC instantaneous
Electrical durability	300000 cycles 400 V 200000 cycles 690 V
Mounting Support	DIN rail Plate
Standards	EN/IEC 60947-1 EN/IEC 60947-4-1 UL 60947-4-1 CSA C22.2 No 60947-4-1 IEC 60335-1
Product Certifications	IECEE CB Scheme UL CSA UKCA

Price is “List Price” and may be subject to a trade discount – check with your local distributor or retailer for actual price.

Disclaimer: This documentation is not intended as a substitute for and is not to be used for determining suitability or reliability of these products for specific user applications

Connections - terminals	Control circuit: screw clamp terminals 1 0.002…0.006 in² (1…4 mm²) - cable stiffness: solid Control circuit: screw clamp terminals 2 0.002…0.006 in² (1…4 mm²) - cable stiffness: solid Control circuit: screw clamp terminals 1 0.002…0.006 in² (1…4 mm²) - cable stiffness: flexible without cable end Control circuit: screw clamp terminals 2 0.002…0.006 in² (1…4 mm²) - cable stiffness: flexible without cable end Control circuit: screw clamp terminals 1 0.002…0.006 in² (1…4 mm²) - cable stiffness: flexible with cable end Control circuit: screw clamp terminals 2 0.002…0.004 in² (1…2.5 mm²) - cable stiffness: flexible with cable end Power circuit: EverLink BTR screw connectors 1 0.002…0.05 in² (1…35 mm²) - cable stiffness: solid Power circuit: EverLink BTR screw connectors 2 0.002…0.04 in² (1…25 mm²) - cable stiffness: solid Power circuit: EverLink BTR screw connectors 1 0.002…0.05 in² (1…35 mm²) - cable stiffness: flexible with or without cable end Power circuit: EverLink BTR screw connectors 2 0.002…0.04 in² (1…25 mm²) - cable stiffness: flexible with or without cable end
Tightening torque	Control circuit 15.05 lbf.in (1.7 N.m) screw clamp terminals Power circuit 44.3 lbf.in (5 N.m) EverLink BTR screw connectors 0.002…0.04 in² (1…25 mm²) Power circuit 70.8 lbf.in (8 N.m) EverLink BTR screw connectors 0.05 in² (35 mm²)
Maximum operating rate	100 cyc/h

Complementary

Auxiliary contacts type	Mechanically linked 1 NO + 2 NC IEC 60947-5-1

Environment

IP degree of protection	IP20 front face IEC 60529
Ambient air temperature for operation	23…140 °F (-5…60 °C)
Ambient Air Temperature for Storage	-76…176 °F (-60…80 °C)
Operating altitude	0...9842.52 ft (0...3000 m)
Height	6.5 in (166 mm)
Width	2.2 in (55 mm)
Depth	6.1 in (156 mm)
Net Weight	2.9 lb(US) (1.3 kg)

Ordering and shipping details

Category	US10I1222357
Discount Schedule	0I12
GTIN	3606480401251
Returnability	No
Country of origin	FR

Packing Units

Unit Type of Package 1	PCE
Nbr. of units in pkg.	1
Package 1 Height	2.756 in (7.000 cm)
Package 1 Width	7.874 in (20.000 cm)
Package 1 Length	9.055 in (23.000 cm)

Package weight(Lbs)	2.443 lb(US) (1.108 kg)
Unit Type of Package 2	S03
Number of Units in Package 2	6
Package 2 Height	11.811 in (30.000 cm)
Package 2 Width	11.811 in (30.000 cm)
Package 2 Length	15.748 in (40.000 cm)
Package 2 Weight	16.228 lb(US) (7.361 kg)
Unit Type of Package 3	P06
Number of Units in Package 3	48
Package 3 Height	31.496 in (80.000 cm)
Package 3 Width	31.496 in (80.000 cm)
Package 3 Length	23.622 in (60.000 cm)
Package 3 Weight	148.565 lb(US) (67.388 kg)

Contractual warranty

Warranty	18 months

Environmental Data

Schneider Electric aims to achieve Net Zero status by 2050 through supply chain partnerships, lower impact materials, and circularity via our ongoing “Use Better, Use Longer, Use Again” campaign to extend product lifetimes and recyclability.

Environmental Data explained

How we assess product sustainability

Environmental footprint

Carbon footprint (kg CO2 eq, Total Life cycle)	1
Environmental Disclosure	Product Environmental Profile

Use Better

Materials and Substances

Packaging made with recycled cardboard	Yes
Packaging without single use plastic	Yes
EU RoHS Directive	Compliant
REACh Regulation	REACh Declaration
California proposition 65	WARNING: This product can expose you to chemicals including: Antimony oxide & Antimony trioxide, which is known to the State of California to cause cancer. For more information go to www.P65Warnings.ca.gov

Use Again

Repack and remanufacture

Recyclability potential, in %	67
Circularity Profile	No need of specific recycling operations
Take-back	No
WEEE Label	The product must be disposed on European Union markets following specific waste collection and never end up in rubbish bins.

Technical Illustration
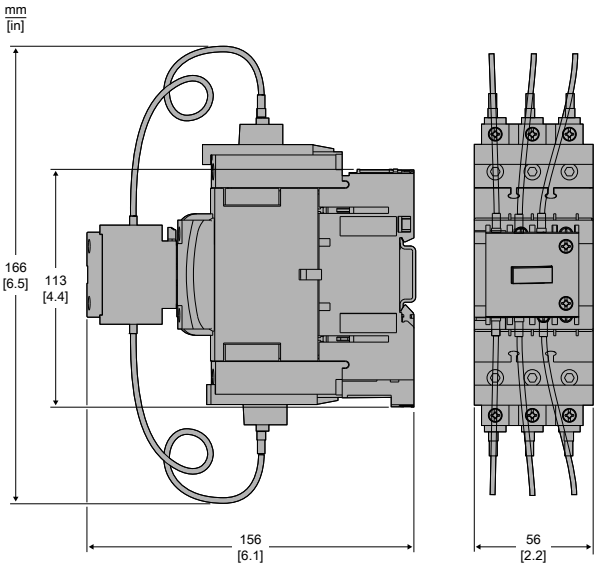
Assembly's dimensions