Product data sheet

Specifications

variable speed drive, Altivar Machine ATV320, 4kW, 200 to 240V, 3 phases, compact

ATV320U40M3C

Product availability: Stock - Normally stocked in distribution facility

Main

Range of Product	Altivar Machine ATV320
Product or Component Type	Variable speed drive
Product Specific Application	Complex machines
Variant	Standard version
Format of the drive	Compact
Mounting Mode	Wall mount
Communication Port Protocol	Modbus serial CANopen
Option card	communication module, CANopen communication module, EtherCAT communication module, Profibus DP V1 communication module, PROFINET communication module, Ethernet Powerlink communication module, EtherNet/IP communication module, DeviceNet
[Us] rated supply voltage	200...240 V - 15...10 %
Nominal output current	17.5 A
Motor power kW	4.0 kW heavy duty
Maximum Horse Power Rating	5 hp
EMC filter	Without EMC filter
IP degree of protection	IP20

Complementary

Discrete input number	7
Discrete input type	STO safe torque off, 24 V DC1.5 kOhm DI1...DI6 logic inputs, 24 V DC 30 V) DI5 programmable as pulse input 0…30 kHz, 24 V DC 30 V)
Discrete input logic	Positive logic (source) Negative logic (sink)
Discrete output number	3
Discrete output type	Open collector DQ+ 0…1 kHz 30 V DC 100 mA Open collector DQ- 0…1 kHz 30 V DC 100 mA
Analogue input number	3
Analogue input type	AI1 voltage 0...10 V DC 30 kOhm 10 bits AI2 bipolar differential voltage +/- 10 V DC 30 kOhm 10 bits AI3 current 0...20 mA (or 4-20 mA, x-20 mA, 20-x mA or other patterns by configuration) 250 Ohm 10 bits
Analogue output number	1

Price is “List Price” and may be subject to a trade discount – check with your local distributor or retailer for actual price.

Disclaimer: This documentation is not intended as a substitute for and is not to be used for determining suitability or reliability of these products for specific user applications

Analogue output type	Software-configurable current AQ1 0...20 mA 800 Ohm 10 bits Software-configurable voltage AQ1 0...10 V DC 470 Ohm 10 bits
Relay output type	Configurable relay logic R1A 1 NO 100000 cycles Configurable relay logic R1B 1 NC 100000 cycles Configurable relay logic R1C Configurable relay logic R2A 1 NO 100000 cycles Configurable relay logic R2C
Maximum switching current	Relay output R1A, R1B, R1C resistive, cos phi = 1 3 A 250 V AC Relay output R1A, R1B, R1C resistive, cos phi = 1 3 A 30 V DC Relay output R1A, R1B, R1C, R2A, R2C inductive, cos phi = 0.4 7 ms 2 A 250 V AC Relay output R1A, R1B, R1C, R2A, R2C inductive, cos phi = 0.4 7 ms 2 A 30 V DC Relay output R2A, R2C resistive, cos phi = 1 5 A 250 V AC Relay output R2A, R2C resistive, cos phi = 1 5 A 30 V DC
Minimum switching current	Relay output R1A, R1B, R1C, R2A, R2C 5 mA 24 V DC
Method of access	Slave CANopen
4 quadrant operation possible	True
Asynchronous motor control profile	Voltage/frequency ratio, 5 points Flux vector control without sensor, standard Voltage/frequency ratio - Energy Saving, quadratic U/f Flux vector control without sensor - Energy Saving Voltage/frequency ratio, 2 points
Synchronous motor control profile	Vector control without sensor
Maximum output frequency	0.599 kHz
Acceleration and deceleration ramps	Linear U S CUS Ramp switching Acceleration/deceleration ramp adaptation Acceleration/deceleration automatic stop with DC injection
Motor slip compensation	Automatic whatever the load Adjustable 0...300 % Not available in voltage/frequency ratio (2 or 5 points)
Switching frequency	2...16 kHz adjustable 4...16 kHz with derating factor
Nominal switching frequency	4 kHz
Braking to standstill	By DC injection
Brake chopper integrated	True
Line current	23.8 A 200 V heavy duty) 19.9 A 240 V heavy duty)
Maximum Input Current per Phase	23.8 A
Maximum output voltage	240 V
Apparent power	8.3 kVA 240 V heavy duty)
Network Frequency	50-60 Hz
Relative symmetric network frequency tolerance	5 %
Prospective line Isc	5 kA
Base load current at high overload	17.0 A
Power dissipation in W	Fan 140 W 200 V 4 kHz
With safety function Safely Limited Speed (SLS)	True
With safety function Safe brake management (SBC/SBT)	False
With safety function Safe Operating Stop (SOS)	False

With safety function Safe Position (SP)	False
With safety function Safe programmable logic	False
With safety function Safe Speed Monitor (SSM)	False
With safety function Safe Stop 1 (SS1)	True
With sft fct Safe Stop 2 (SS2)	False
With safety function Safe torque off (STO)	True
With safety function Safely Limited Position (SLP)	False
With safety function Safe Direction (SDI)	False
Protection type	Input phase breaks drive Overcurrent between output phases and earth drive Overheating protection drive Short-circuit between motor phases drive Thermal protection drive
Width	5.5 in (140 mm)
Height	7.2 in (184.0 mm)
Depth	6.2 in (158.0 mm)
Net Weight	4.9 lb(US) (2.2 kg)
Transient overtorque	170…200 % of nominal motor torque

Environment

Operating position	Vertical +/- 10 degree
Product Certifications	CE ATEX NOM GOST EAC RCM KC
Marking	CE ATEX UL CSA EAC RCM
Standards	IEC 61800-5-1
Electromagnetic compatibility	Electrostatic discharge immunity test level 3 conforming to IEC 61000-4-2 Radiated radio-frequency electromagnetic field immunity test level 3 conforming to IEC 61000-4-3 Electrical fast transient/burst immunity test level 4 conforming to IEC 61000-4-4 1.2/50 µs - 8/20 µs surge immunity test level 3 conforming to IEC 61000-4-5 Conducted radio-frequency immunity test level 3 conforming to IEC 61000-4-6 Voltage dips and interruptions immunity test conforming to IEC 61000-4-11
Environmental class (during operation)	Class 3C3 according to IEC 60721-3-3 Class 3S2 according to IEC 60721-3-3
Maximum acceleration under shock impact (during operation)	150 m/s² at 11 ms
Maximum acceleration under vibrational stress (during operation)	10 m/s² at 13...200 Hz
Maximum deflection under vibratory load (during operation)	1.5 mm at 2...13 Hz
Permitted relative humidity (during operation)	Class 3K5 according to EN 60721-3
Volume of cooling air	4332.5 Gal/hr(US) (16.4 m3/h)
Overvoltage category	III

Regulation loop	Adjustable PID regulator
Speed accuracy	+/- 10 % of nominal slip 0.2 Tn to Tn
Pollution degree	2
Ambient air transport temperature	-13…158 °F (-25…70 °C)
Ambient air temperature for operation	14…122 °F (-10…50 °C) without derating 122…140 °F (50…60 °C) with derating factor
Ambient Air Temperature for Storage	-13…158 °F (-25…70 °C)

Ordering and shipping details

Category	US1CP4B22152
Discount Schedule	CP4B
GTIN	3606480966668
Returnability	Yes
Country of origin	ID

Packing Units

Unit Type of Package 1	PCE
Nbr. of units in pkg.	1
Package 1 Height	9.646 in (24.500 cm)
Package 1 Width	7.480 in (19.000 cm)
Package 1 Length	10.551 in (26.800 cm)
Package weight(Lbs)	5.648 lb(US) (2.562 kg)
Unit Type of Package 2	S06
Number of Units in Package 2	12
Package 2 Height	29.528 in (75.000 cm)
Package 2 Width	23.622 in (60.000 cm)
Package 2 Length	31.496 in (80.000 cm)
Package 2 Weight	97.577 lb(US) (44.260 kg)

Contractual warranty

Warranty (in months)	18

Environmental Data

Schneider Electric aims to achieve Net Zero status by 2050 through supply chain partnerships, lower impact materials, and circularity via our ongoing “Use Better, Use Longer, Use Again” campaign to extend product lifetimes and recyclability.

Environmental Data explained >

How we assess product sustainability >

Environmental footprint

Carbon footprint (kg CO2 eq, Total Life cycle)	**2944**
Environmental Disclosure	**Product Environmental Profile**

Use Better

Materials and Substances

Packaging made with recycled cardboard	**Yes**
Packaging without single use plastic	**Yes**
EU RoHS Directive	**Pro-active compliance (Product out of EU RoHS legal scope)**
SCIP Number	**6bbbffbe-8a69-47e2-9c29-bc773d0b789b**
REACh Regulation	**REACh Declaration**
California proposition 65	**WARNING: This product can expose you to chemicals including: Lead and lead compounds, which is known to the State of California to cause cancer and birth defects or other reproductive harm. For more information go to www.P65Warnings.ca.gov**

Energy efficiency

Product contributes to saved and avoided emissions	**Yes**

Use Again

Repack and remanufacture

Circularity Profile	**End of Life Information**
Take-back	**No**
WEEE Label	**The product must be disposed on European Union markets following specific waste collection and never end up in rubbish bins.**

Dimensions Drawings

Dimensions

Right View, Front View and Front View with EMC Plate

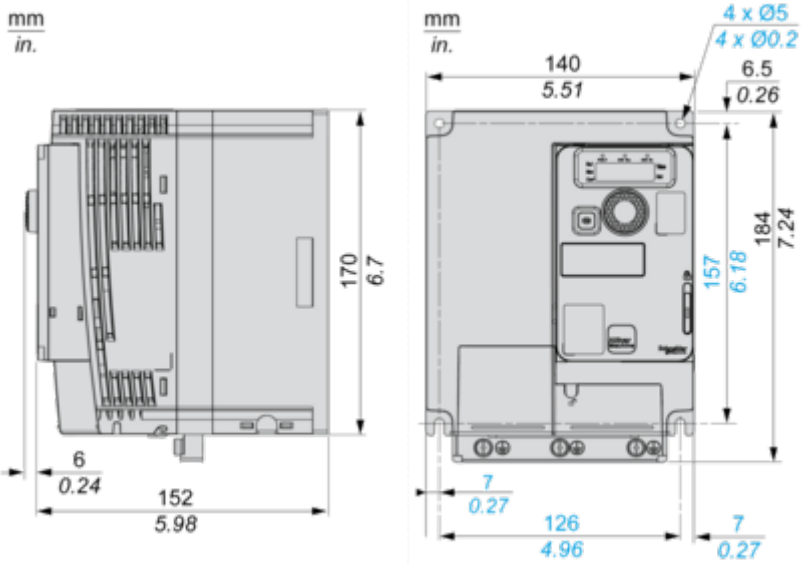

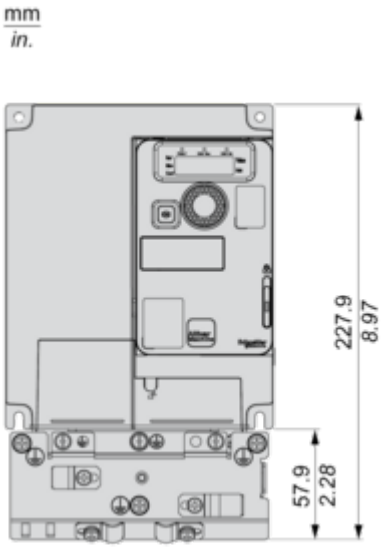

Mounting and Clearance

Mounting Types

Mounting Type A: Individual with Ventilation Cover

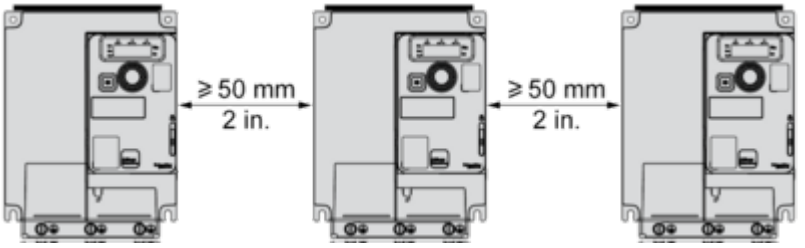

Only Possible at Ambient Temperature Less or Equal to 50 °C (122 °F)

Mounting Type B: Side by Side, Ventilation Cover Removed

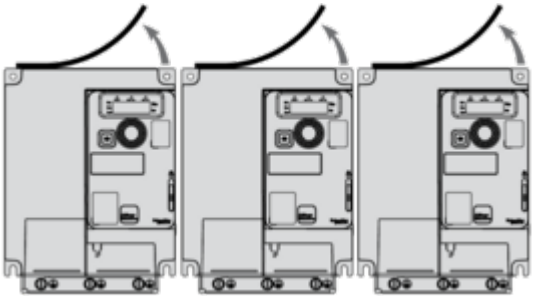

Mounting Type C: Individual, Ventilation Cover Removed

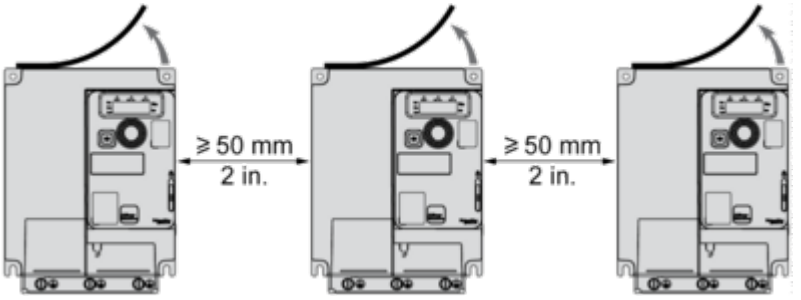

For Operation at Ambient Temperature Above 50 °C (122 °F)

Connections and Schema

Connection Diagrams

Single or Three-phase Power Supply - Diagram With Line Contactor

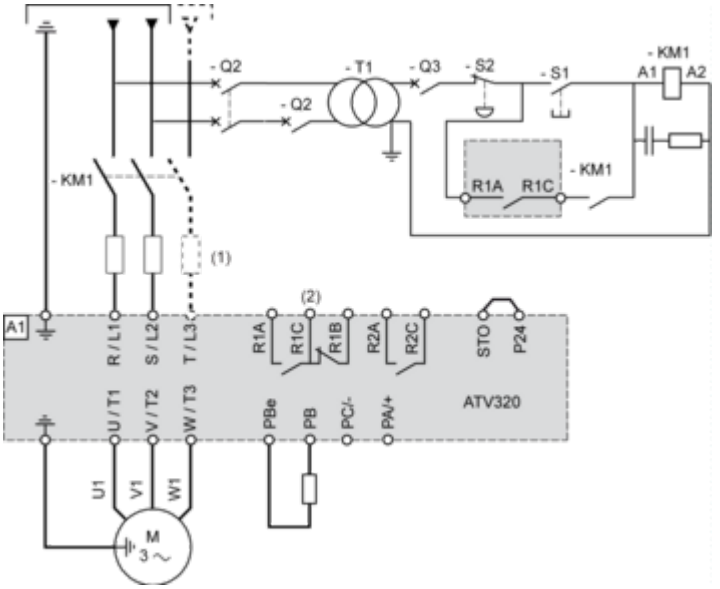

(1) Line choke (if used)
(2) Use relay output R1 set to operating state Fault to switch Off the product once an error is detected.

Single or Three-phase Power Supply - Diagram With Downstream Contactor

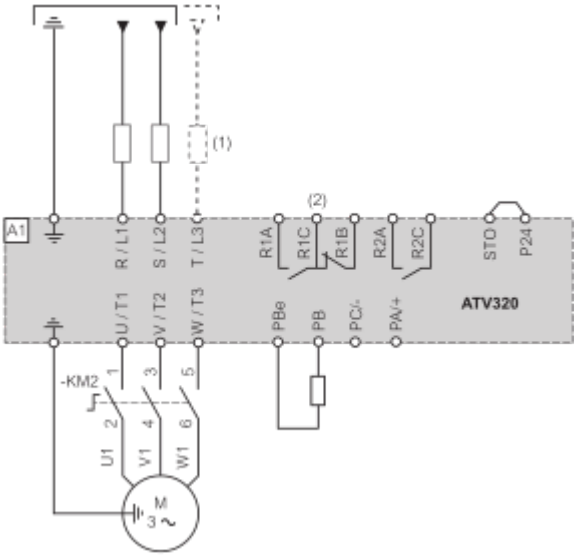

(1) Line choke (if used)
(2) Use relay output R1 set to operating state Fault to switch Off the product once an error is detected.

Control Block Wiring Diagram

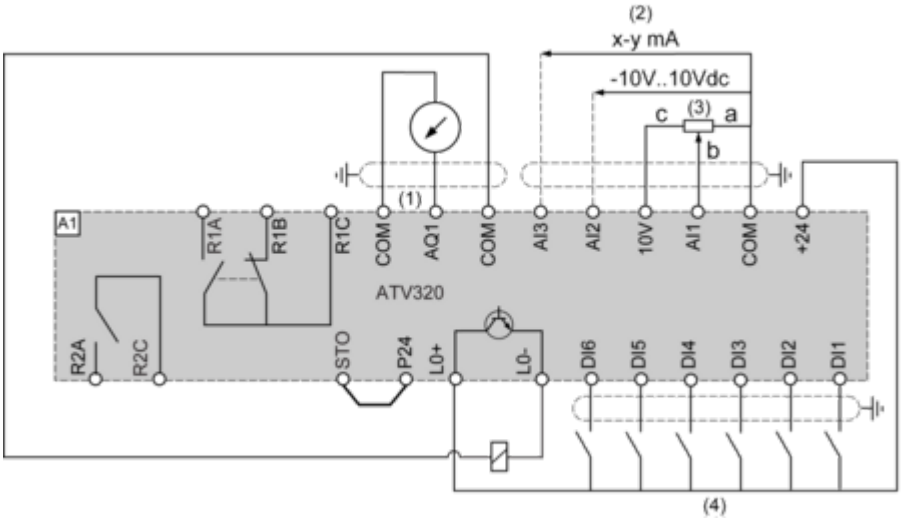

(1) Analog output
(2) Analog inputs
(3) Potentiometer SZ1RV1202 (2.2 kΩ) or similar (10 kΩ maximum)
(4) Digital Inputs - Shielding instructions are given in the Electromagnetic Compatibility section

Digital Inputs Wiring

Switch Set to SRC (Source) Position Using the Output Power Supply for the Digital Inputs

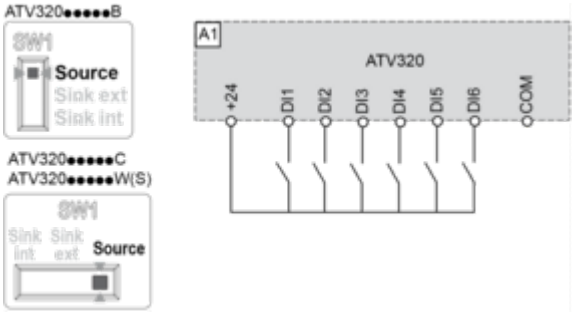

Switch Set to SRC (Source) Position and Use of an External Power Supply for the Digital Inputs

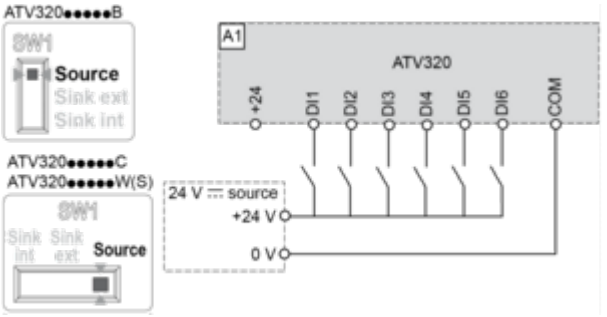

Switch Set to SK (Sink) Position Using the Output Power Supply for the Digital Inputs

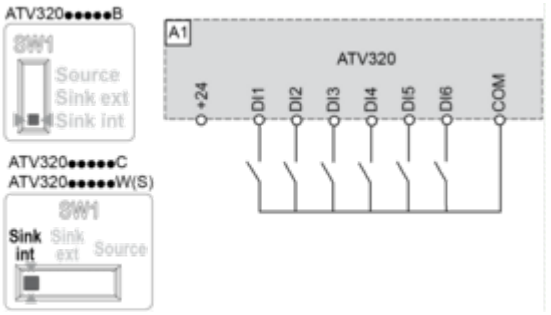

Switch Set to EXT Position Using an External Power Supply for the Digital Inputs

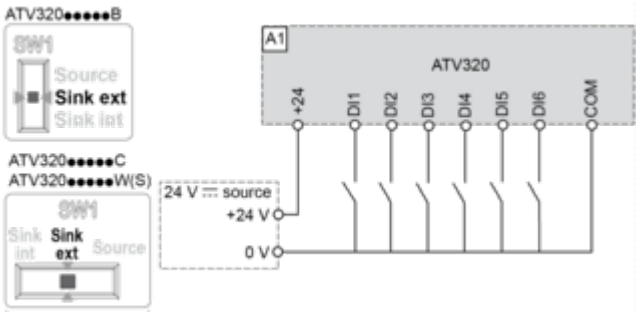

NOTE :

• STO input is also connected by default on a 24 Vdc terminal. If the external power supply is switched off, the function STO will be triggered.

• To avoid triggering the STO function when switching-on the product, the external power supply must be previously switched on.

Performance Curves

Derating Curves

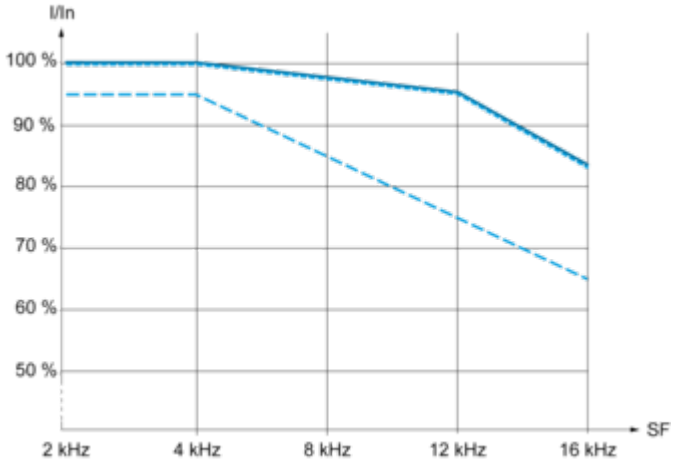

40 °C (104 °F) - Mounting type A, B and C
50 °C (122 °F) - Mounting type C
60 °C (140 °F) - Mounting type C

In : Nominal Drive Current
SF : Switching Frequency

Technical Illustration

Dimensions

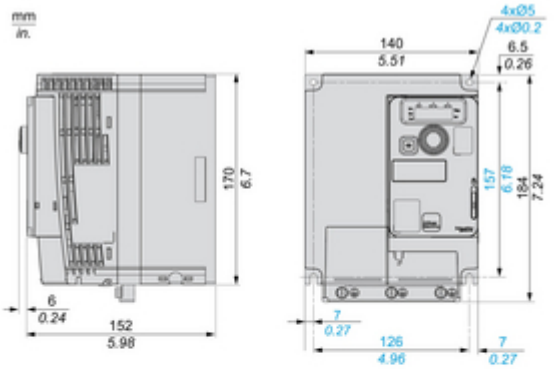

With EMC Plate

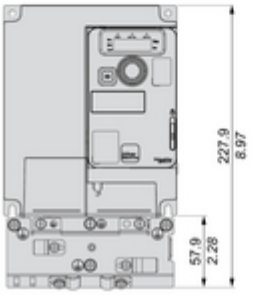

Image of product / Alternate images

Alternative

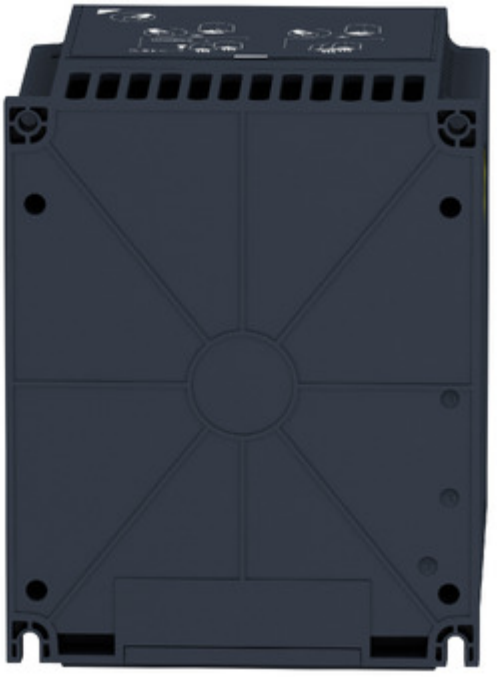

ESC
DANGER
Altivar
Schneider

>40°C
>50mm