Square-Duct™

Class 5100

Catalog

5100CT0101
R03/25

www.se.com

Legal Information

The information provided in this document contains general descriptions, technical characteristics and/or recommendations related to products/solutions.

This document is not intended as a substitute for a detailed study or operational and site-specific development or schematic plan. It is not to be used for determining suitability or reliability of the products/solutions for specific user applications. It is the duty of any such user to perform or have any professional expert of its choice (integrator, specifier or the like) perform the appropriate and comprehensive risk analysis, evaluation and testing of the products/solutions with respect to the relevant specific application or use thereof.

The Schneider Electric brand and any trademarks of Schneider Electric SE and its subsidiaries referred to in this document are the property of Schneider Electric SE or its subsidiaries. All other brands may be trademarks of their respective owner.

This document and its content are protected under applicable copyright laws and provided for informative use only. No part of this document may be reproduced or transmitted in any form or by any means (electronic, mechanical, photocopying, recording, or otherwise), for any purpose, without the prior written permission of Schneider Electric.

Schneider Electric does not grant any right or license for commercial use of the document or its content, except for a non-exclusive and personal license to consult it on an "as is" basis.

Schneider Electric reserves the right to make changes or updates with respect to or in the content of this document or the format thereof, at any time without notice.

To the extent permitted by applicable law, no responsibility or liability is assumed by Schneider Electric and its subsidiaries for any errors or omissions in the informational content of this document, as well as any non-intended use or misuse of the content thereof.

Table of Contents

Wireway Offerings 5
Application and General Information 7
General Purpose—NEMA Type 1 Painted Wireways 9
- Application 9
- Construction 9
- Finish 13
- Industry Standards 13
- Wireway Components 14
- Accessories 19

Oiltight—NEMA Type 12 Wireway 20
- Application 20
- Construction 20
- Finish 22
- Industry Standards 23
- Wireway Components 23
- Accessories 34

Raintight—NEMA Type 3R Wireway 35
- Application 35
- Construction 35
- Finish 36
- Industry Standards 36
- Wireway Components 36

Raintight—NEMA Type 3R Trough 41
- Application 41
- Construction 41
- Finish 42
- Industry Standards (Trough) 42
- Accessories (Trough) 42

Wireway Offerings

Figure 1 - General Purpose—NEMA Type 1 Painted Wireway

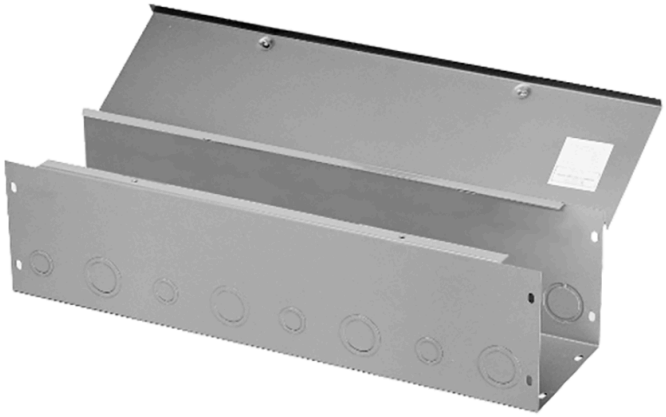

Figure 2 - Oiltight—NEMA Type 12 Wireway

Figure 3 - Raintight—NEMA Type 3R Wireway

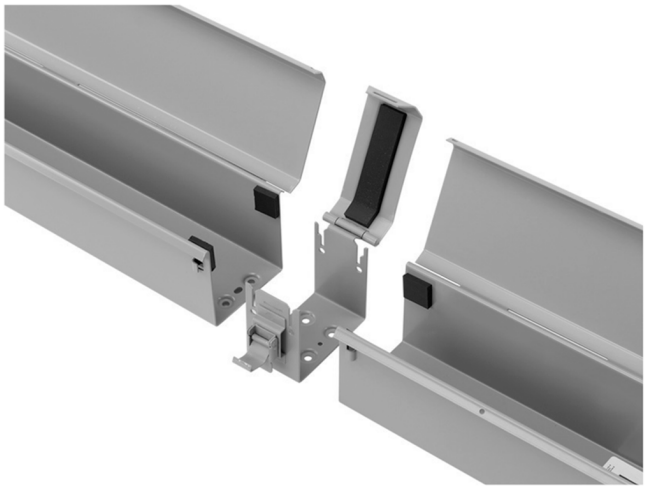

Figure 4 - Raintight—NEMA Type 3R Trough

Application and General Information

Wireway is designed to protect electrical wiring from dust, dirt, oil, and water. It is also designed to carry electrical feeders, branch circuits, and other groups of conductors. Most sections and fittings are completely open on one side so wires and cables can be laid in along an entire wireway run. No pulling through of wires or cables is required with most designs.

The Square D™ Wireway products, manufactured by Schneider Electric, are available in the following types:

- General Purpose—NEMA Type 1 Painted Wireway
- Oiltight—NEMA Type 12 Wireway
- Raintight—NEMA Type 3R Wireway
- Raintight—NEMA Type 3R Trough

Figure 5 - Oiltight—NEMA Type 12 Wireway Tee, Flange Gasket, Connector, Barriers with Brackets, 90° Elbow (clockwise from top)

All wireway is UL listed under file E27524, 870, and CSA file 42184, Type 1.

Wireway can be used for a variety of applications and, in most cases, can be installed faster and at less expense than conduit. Applications include:

- Incoming cable runs and feeder circuits from switchboards to power and lighting panels
- Distribution of power in industrial plants
- Ganging equipment such as motor controllers, safety switches, and metering devices
- Vertical runs of cable in elevator shafts

When comparing wireway with conduit, wireway provides the following advantages:

- Weighs less and is reusable
- Is easier to install
- Allows conductors to be laid in
- Makes additions to the wiring system easier
- Provides provisions for tap-offs

Figure 6 - General Purpose—NEMA Type 1 Wireway

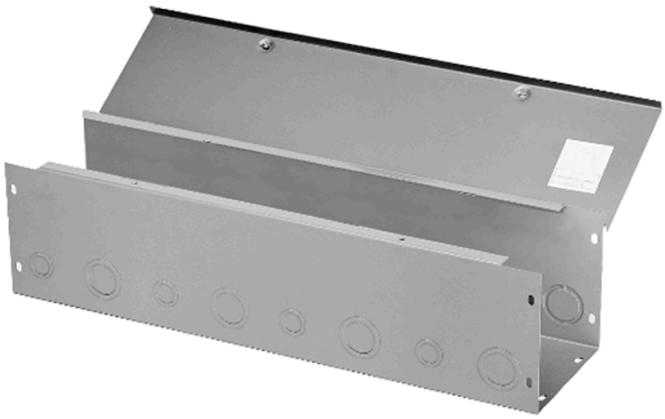

General Purpose—NEMA Type 1 Painted Wireways

Application

General Purpose—NEMA Type 1 Painted Wireway is designed to protect electrical wiring from dust, dirt, oil, and water. All sections and fittings are completely open on one side so wires and cables can be laid in along an entire wireway run. No pulling through of wires or cables is required with this design.

Figure 7 - General Purpose—NEMA Type 1 Painted Wireway

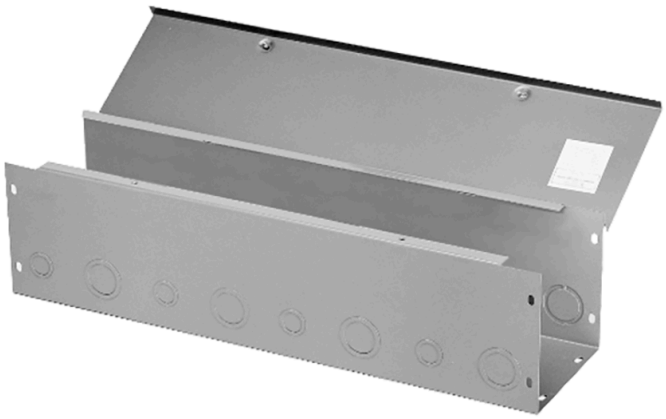

A complete selection of sections and fittings is available in six sizes

Inches	Millimeters
2.50 x 2.50	64 x 64
4.00 x 4.00	102 x 102
6.00 x 6.00	152 x 152
8.00 x 8.00	203 x 203
10.00 x 10.00	254 x 254
12.00 x 12.00	305 x 305

Construction

General Purpose—NEMA Type 1 Painted Wireway construction consists of:

- 16 gauge galvanized steel covers and bodies in sizes:
  - 2.50 x 2.50 in. (64 x 64 mm)
  - 4.00 x 4.00 in. (102 x 102 mm)
  - 6.00 x 6.00 in. (152 x 152 mm)
- 14 gauge galvanized steel covers and bodies in sizes:
  - 8.00 x 8.00 in. (203 x 203 mm)
  - 10.00 x 10.00 in. (254 x 254 mm)
  - 12.00 x 12.00 in. (305 x 305 mm)

- Available with knockouts or without knockouts in sizes:
  - 2.50 x 2.50 in. (64 x 64 mm)
  - 4.00. x 4.00 in. (102 x 102 mm)
  - 6.00 x 6.00 in. (152 x 152 mm)
- Available without knockouts in sizes:
  - 8.00 x 8.00 in. (203 x 203 mm)
  - 10.00 x 10.00 in. (254 x 254 mm)
  - 12.00 x 12.00 in. (305 x 305 mm)
- Patented hidden hinge permits the screw-cover arrangement to be converted to a hinge-cover system on all sizes except 12.00 x 12.00 in. (305 x 305 mm), where hold-down screws are on BOTH sides of the wireway
- Open-top assembly protection for wire and cable insulation that could be damaged in a pull-through wiring system
- Knockouts on wireway sides
- Adapters available for connection to other brands of wireway

Table 1 - Type LDB ANSI 49 Gray Polyester Powder Finish

Compo-nents	2.50 x 2.50 in. (64 x 64 mm)		4.00 x 4.00 in. (102 x 102 mm)		6.00 x 6.00 in. (152 x 152 mm)		8.00 x 8.00 in. (203 x 203 mm)	10.00 x 10.00 in. (254 x 254 mm)	12.00 x 12.00 in. (305 x 305 mm)
	Catalog Number		Catalog Number		Catalog Number		Catalog Number	Catalog Number	Catalog Number
	With Knockouts	Without Knockouts	With Knockouts	Without Knockouts	With Knockouts	Without Knockouts	Without Knockouts	Without Knockouts	Without Knockouts
1 ft. Length	LDB21KO	LDB21	LDB41KO	LDB41	LDB61KO	LDB61	LDB81	LDB101	LDB121
2 ft. Length	LDB22KO	LDB22	LDB42KO	LDB42	LDB62KO	LDB62	LDB82	LDB102	LDB122
3 ft. Length	LDB23KO	LDB23	LDB43KO	LDB43	LDB63KO	LDB63	LDB83	LDB103	LDB123
4 ft. Length	LDB24KO	LDB24	LDB44KO	LDB44	LDB64KO	LDB64	LDB84	LDB104	LDB124
5 ft. Length	LDB25KO	LDB25	LDB45KO	LDB45	LDB65KO	LDB65	LDB85	LDB105	LDB125
6 ft. Length	—	—	LDB46KO	LDB46	LDB66KO	LDB66	LDB86	LDB106	—
10 ft. Length	LDB210KO	LDB210	LDB410KO	LDB410	LDB610KO	LDB610	LDB810	LDB1010	LDB1210
90° Elbow	—	LDB290L	—	LDB490L	—	LDB690L	LDB890L	LDB1090L	LDB1290L
90° Sweep Elbow	—	LDB290LS	—	LDB490LS	—	LDB690LS	LDB890LS	LDB1090LS	LDB1290LS
45° Elbow	—	LDB245L	—	LDB445L	—	LDB645L	LDB845L	LDB1045L	LDB1245L
Tee	—	LDB2T	—	LDB4T	—	LDB6T	LDB8T	LDB10T	LDB12T
Junction Box	—	LDB2J	—	LDB4J	—	LDB6J	LDB8J	LDB10J	LDB12J
Telescope Fitting	—	LDB2TF	—	LDB4TF	—	LDB6TF	LDB8TF	LDB10TF	LDB12TF
Connector[1]	—	LDB2C	—	LDB4C	—	LDB6C	LDB8C	LDB10C	LDB12C
Drop Bracket Hanger	—	LDB2H	—	LDB4H	—	LDB6H	LDB8H	LDB10H	LDB12H
Support Hanger	—	LDB2SH	—	LDB4SH	—	LDB6SH	LDB8SH	LDB10SH	LDB12SH
Closing Plate	LDB2CPKO	LDB2CP	LDB4CPKO	LDB4CP	LDB6CPKO	LDB6CP	LDB8CP[2]	LDB10CP[2]	LDB12CP[2]

1. Add connectors for all lengths and fittings, except closing plates, reducers, ducts, and adapters.
2. These closing plates also available with knockout. Add “KO” to catalog number.

Table 1 - Type LDB ANSI 49 Gray Polyester Powder Finish (Continued)

Compo-nents	2.50 x 2.50 in. (64 x 64 mm)		4.00 x 4.00 in. (102 x 102 mm)		6.00 x 6.00 in. (152 x 152 mm)		8.00 x 8.00 in. (203 x 203 mm)	10.00 x 10.00 in. (254 x 254 mm)	12.00 x 12.00 in. (305 x 305 mm)
	Catalog Number		Catalog Number		Catalog Number		Catalog Number	Catalog Number	Catalog Number
	With Knockouts	Without Knockouts	With Knockouts	Without Knockouts	With Knockouts	Without Knockouts	Without Knockouts	Without Knockouts	Without Knockouts
Panel Adapter	—	LDB2A	—	LDB4A	—	LDB6A	LDB8A	LDB10A	LDB12A
Open Adapter	—	LDB2OA	—	LDB4OA	—	LDB6OA	LDB8OA	LDB10OA	LDB12OA
Reducer	—	—	—	LDB42R	—	LDB64R	LDB86R	LDB108R	LDB1210R
	—	—	—	—	—	—	—	—	LDB128R
Adapter to “LD”[3]	—	LDB2GASK	—	LDB4GAS	—	LDB6GAS	LDB8GASK	LDB10GASK	—

3. Adapters to competitors’ wireways also available. Contact your nearest Schneider Electric sales office for price and availability.

Figure 8 - Concentric Knockout Dimensions

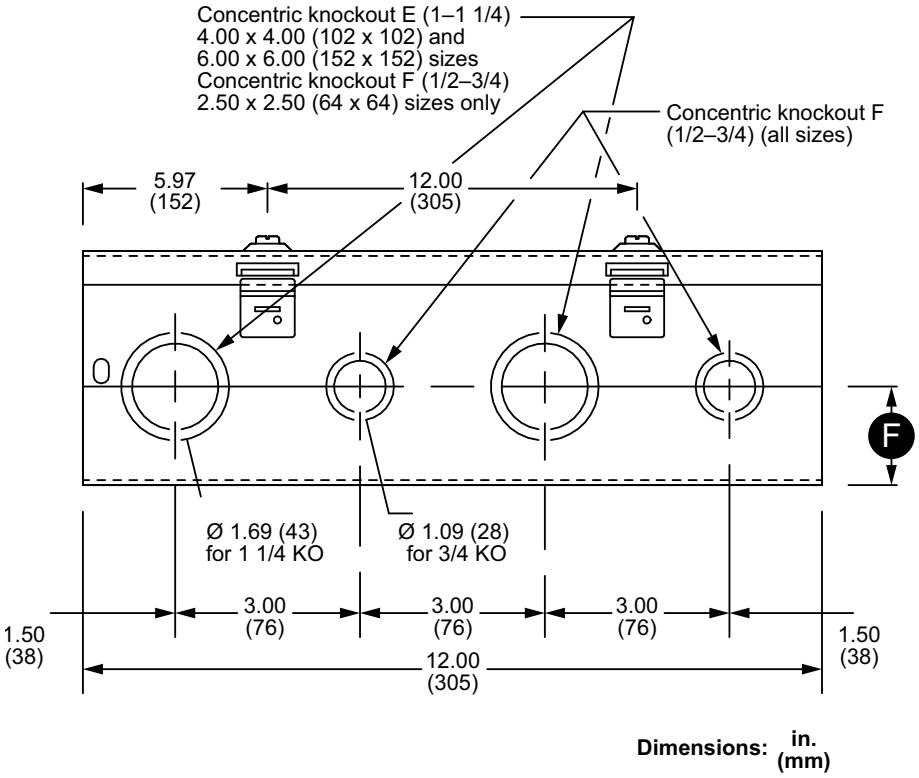

Table 2 - Number of Knockouts for Varying Lengths of 2.5-, 4-, and 6-in. Wireways

Number of Knockouts				
Catalog Number	0.50–0.75 in. (13–19 mm)	1.00–1.25 in. (25–32 mm)	F	
			in.	(mm)
LDB21KO	8	—	1.06	(27)
LDB41KO	4	4	1.62	(41)
LDB61KO	4	4	1.62	(41)
LDB22KO	16	—	1.06	(27)
LDB42KO	8	8	1.62	(41)
LDB62KO	8	8	1.62	(41)
LDB23KO	24	—	1.06	(27)
LDB43KO	12	12	1.62	(41)
LDB63KO	12	12	1.62	(41)
LDB24KO	32	—	1.06	(27)
LDB44KO	16	16	1.62	(41)
LDB64KO	16	16	1.62	(41)
LDB25KO	40	—	1.06	(27)
LDB45KO	20	20	1.62	(41)
LDB65KO	20	20	1.62	(41)
LDB210KO	80	—	1.06	(27)

Table 2 - Number of Knockouts for Varying Lengths of 2.5-, 4-, and 6-in. Wireways (Continued)

Number of Knockouts				
Catalog Number	0.50–0.75 in. (13–19 mm)	1.00–1.25 in. (25–32 mm)	F	
			in.	(mm)
LDB410KO	40	40	1.62	(41)
LDB610KO	40	40	1.62	(41)

Finish

General Purpose—NEMA Type 1 Painted Wireway is furnished in ANSI 49 gray polyester powder finish inside and out over phosphatized surfaces.

Figure 9 - Various Components for Type 1 Wireway

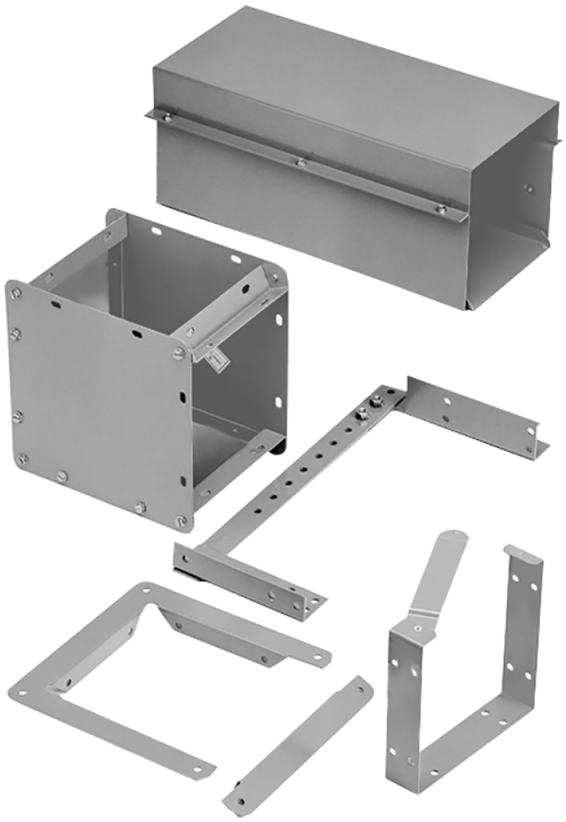

Industry Standards

General Purpose—NEMA Type 1 Painted Wireway is in compliance with the following industry standards:

- UL Listed to File E27524, 870
- NEMA/EEMAC Type 1
- CSA Listed to File LL42184, Type 1
- IEC 60529, IP30

Wireway Components

The Wireway Sections and Fittings Sample Layout, page 14 illustrates how most of the General Purpose—NEMA Type 1 Painted Wireway sections and fittings could be used in an actual wireway run. The covers have been omitted to present the lay-in feature more clearly. Many different sections and fittings can be combined in any configuration desired.

Figure 10 - Wireway Sections and Fittings Sample Layout

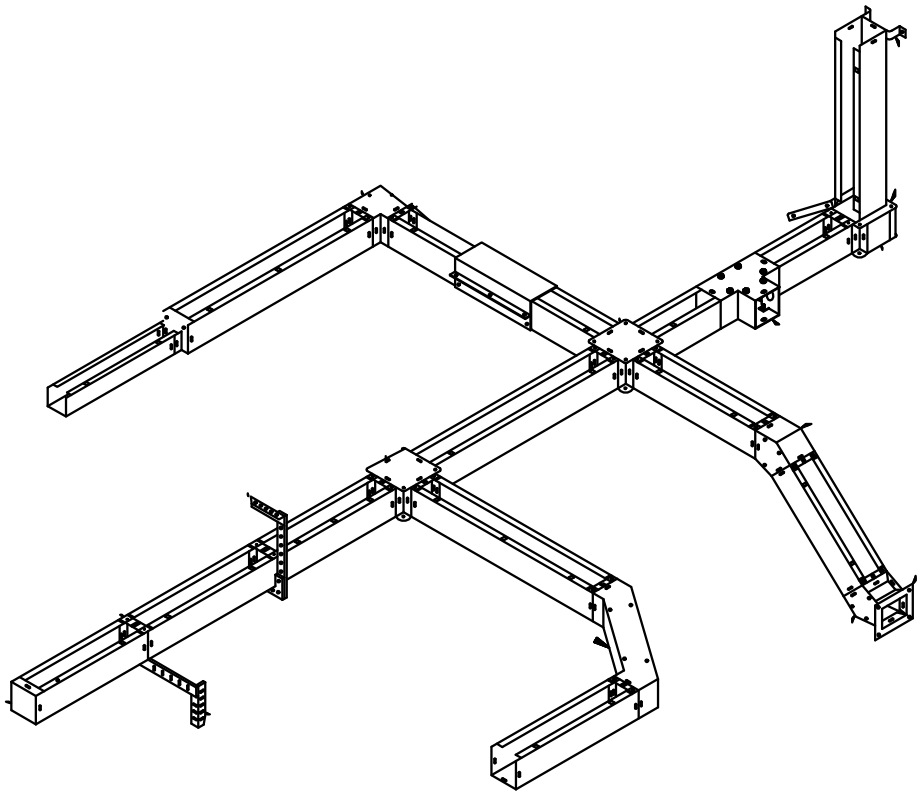

Figure 11 - Wireway Straight Section

Available in lengths from 1 ft. (30 cm) to 10 ft. (305 cm).

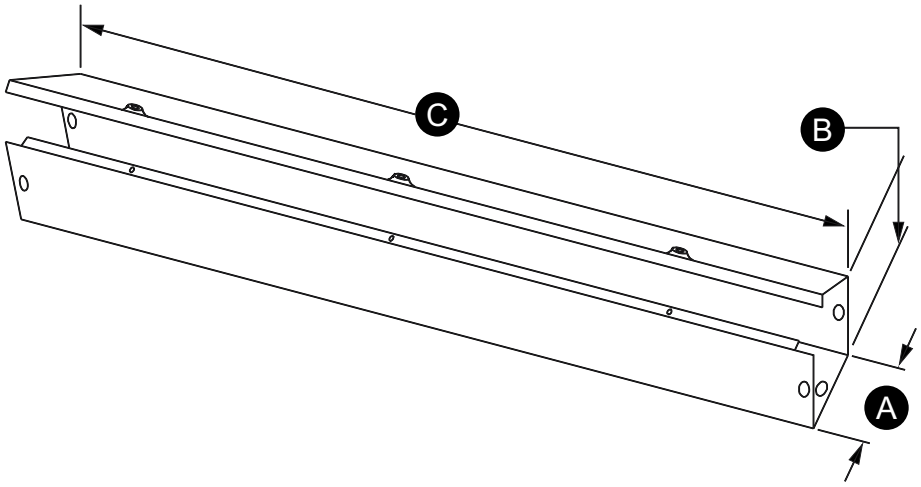

Figure 12 - Wireway 90° Flush Tee

Use wherever flush mounting against a vertical or horizontal surface is required.

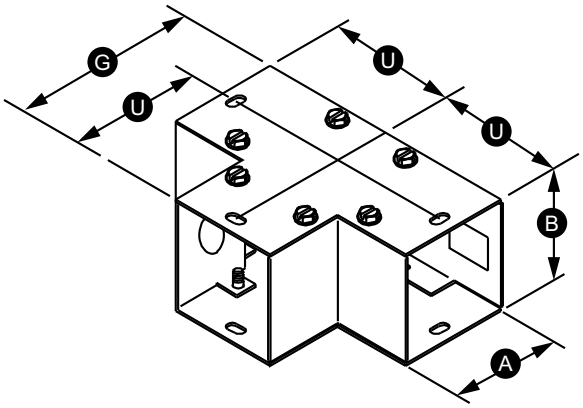

Figure 13 - Wireway 90° Sweep Elbow

When a large radius is needed, use this sweep elbow.

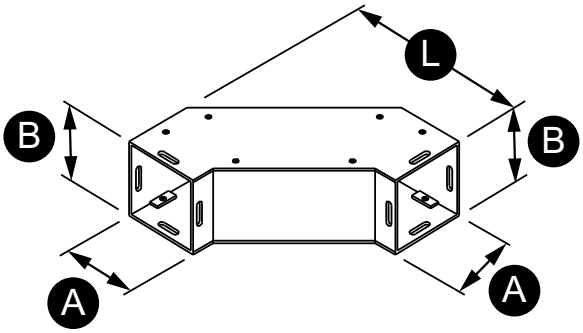

Figure 14 - Wireway 90° Cross-Junction

This unique fitting forms left or right 90° turns. It can also be used as a tee or cross. When fitted with an open adapter, entrances can be made in the top and bottom. Each unit includes two closure plates.

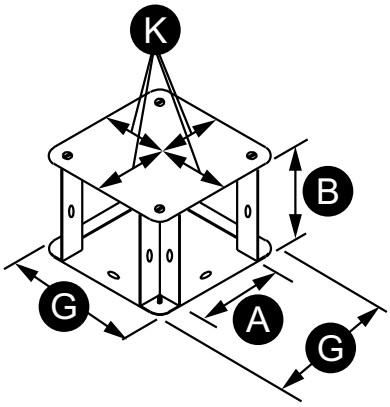

Figure 15 - Wireway 90° Elbow

Any side can be removed, so lay-in feature is retained regardless of how the elbow is oriented. Sides are held together with screws.

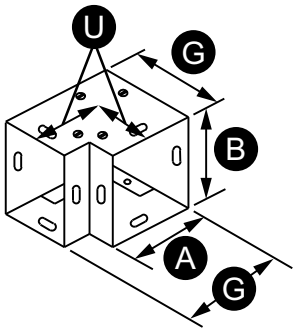

Figure 16 - Wireway 45° Elbow

Similar to the 90° elbow in design and function.

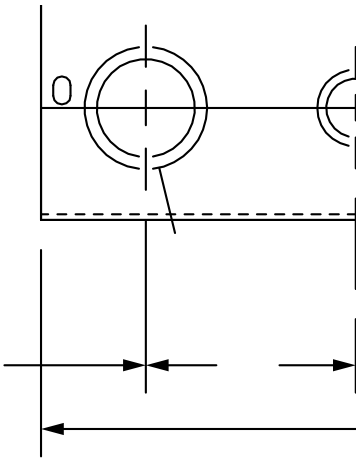

Figure 17 - Telescope Fitting

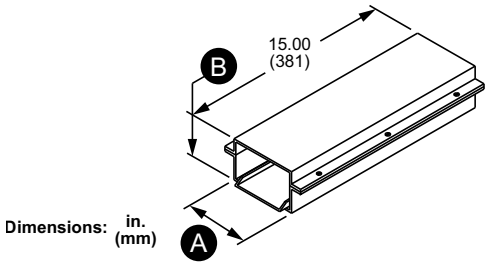

Figure 18 - Open Adapter

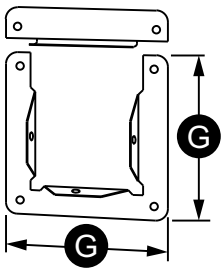

Figure 19 - Panel Adapter

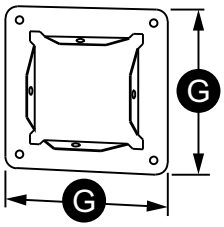

Wireway sections and fittings are rigidly joined together with connectors. The top member swings aside to retain the lay-in feature. A connector is required at each wireway joint except at telescope fittings, panel adapters, open adapters, closing plates or reducers. Connectors must be ordered separately.

Figure 20 - Connector

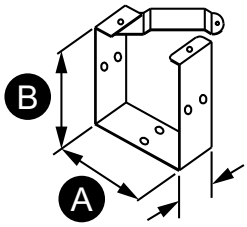

1.38 in. (35 mm) on:	2.00 in. (51 mm) on:
2.00 x 200 in. (51 x 51 mm)	8.00 x 8.99 in. (203 x 203 mm)
4.00 x 4.00 in. (102 x 102 mm)	10.00 x 10.00 in. (254 x 254 mm)
6.00 x 6.00 in. (152 x 152 mm)	12.00 x 12 in. (305 x 305 mm)

Figure 21 - Closing Plate

Closes the end of a wireway section or run.

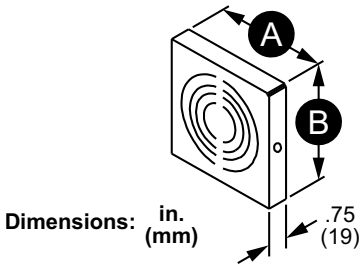

Figure 22 - Reducer

Used to reduce to a smaller wireway size.

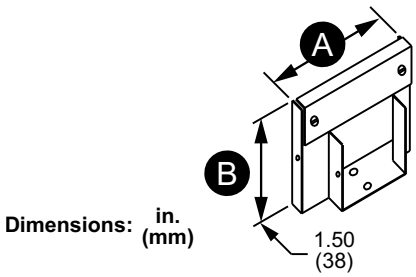

Figure 23 - Drop Hanger

Used to support a wireway run.

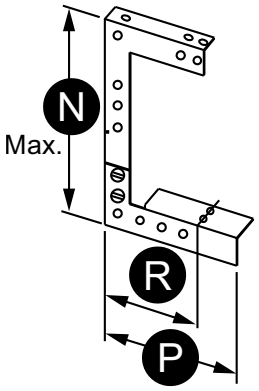

Figure 24 - Bracket Hanger

Used to support a wireway run.

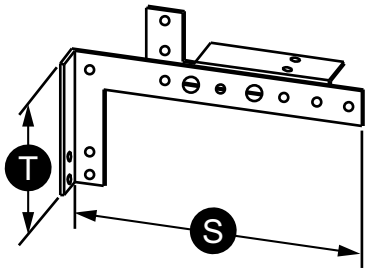

Figure 25 - Support Hanger

Support hangers can be used for floor or wall installations.

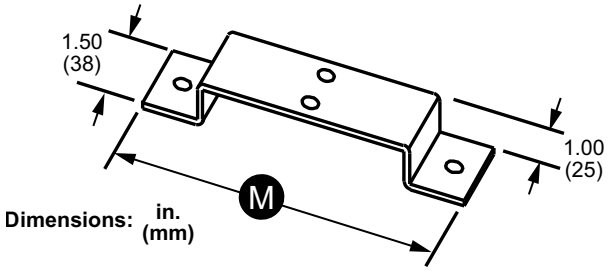

Table 3 - Dimensions for Wireway Components

A x B	C								G	H	J	K	L	M	N	P	R	S	T	U
in. (mm)	in. (mm)	in. (mm)	in. (mm)	in. (mm)	in. (mm)	in. (mm)	in. (mm)	in. (mm)	in. (mm)	in. (mm)	in. (mm)	in. (mm)	in. (mm)	in. (mm)	in. (mm)	in. (mm)	in. (mm)	in. (mm)	in. (mm)	in. (mm)
2.50 x 2.50 (64 x 64)	12.00 (305)	—	24.00 (610)	36.00 (914)	48.00 (1219)	60.00 (1524)	72.00 (1828)	120.00 (3048)	4.50 (114)	2.75 (70)	2.25 (57)	2.25 (57)	7.91 (201)	4.62 (117)	8.50 (216)	4.50 (114)	3.38 (86)	7.25 (184)	3.75 (95)	3.25 (83)
4.00 x 4.00 (102 x 102)	12.00 (305)	18.00 (455)	24.00 (610)	36.00 (914)	48.00 (1219)	60.00 (1524)	72.00 (1828)	120.00 (3048)	6.00 (152)	3.38 (86)	2.50 (64)	3.00 (76)	9.41 (239)	6.12 (155)	10.50 (267)	6.00 (152)	4.12 (105)	9.25 (235)	4.50 (114)	4.00 (102)
6.00 x	12.00 (305)	18.00 (455)	24.00 (610)	36.00 (914)	48.00 (1219)	60.00 (1524)	72.00 (1828)	120.00 (3048)	8.00 (203)	4.25 (108)	3.00 (76)	4.00 (102)	11.34 (288)	8.12 (206)	15.00 (381)	7.12 (181)	5.12 (130)	13.75 (349)	5.50 (140)	5.00 (127)

Table 3 - Dimensions for Wireway Components (Continued)

A x B	C								G	H	J	K	L	M	N	P	R	S	T	U
in. (mm)	in. (mm)	in. (mm)	in. (mm)	in. (mm)	in. (mm)	in. (mm)	in. (mm)	in. (mm)	in. (mm)	in. (mm)	in. (mm)	in. (mm)	in. (mm)	in. (mm)	in. (mm)	in. (mm)	in. (mm)	in. (mm)	in. (mm)	in. (mm)
6.00 (152 x 152)																				
8.00 x 8.00 (203 x 203)	12.00 (305)	18.00 (455)	24.00 (610)	36.00 (914)	48.00 (1219)	60.00 (1524)	72.00 (1828)	120.00 (3048)	10.00 (254)	5.06 (129)	3.38 (86)	5.00 (127)	13.44 (341)	10.12 (257)	21.00 (533)	10.81 (275)	7.00 (178)	13.75 (349)	7.75 (197)	6.00 (152)
10.00 x 10.00 (254 x 254)	12.00 (305)	—	24.00 (610)	36.00 (914)	48.00 (1219)	60.00 (1524)	72.00 (1828)	120.00 (3048)	12.00 (305)	6.00 (152)	3.75 (95)	6.00 (152)	15.62 (395)	12.12 (308)	22.00 (559)	13.18 (335)	8.38 (213)	13.75 (349)	10.25 (260)	7.00 (178)
12.00 x 12.00 (305 x 305)	12.00 (305)	—	24.00 (610)	36.00 (914)	48.00 (1219)	60.00 (1524)	72.00 (1828)	120.00 (3048)	14.00 (356)	6.75 (171)	4.25 (108)	7.00 (178)	17.44 (443)	14.12 (359)	23.00 (584)	15.56 (395)	9.78 (248)	13.75 (349)	12.50 (318)	8.00 (203)

NOTE: Dimensions J, K, and U are from intersections of center lines.

Accessories

Touch-up paint (order no. PK49SP)

Oiltight—NEMA Type 12 Wireway

Application

Oiltight—NEMA Type 12 Wireway is designed to protect electrical wiring from dust, dirt, oil, and water. All straight sections and fittings are completely open on one side so wires and cables can be laid in along an entire wireway run. No pulling through of wires or cables is required with this design.

Figure 26 - Oiltight Lay-in—NEMA Type 12 Wireway

A complete selection of sections and fittings is available in five sizes:

Inches	Millimeters
2.50 x 2.50	64 x 64
4.00 x 4.00	102 x 102
6.00 x 6.00	152 x 152
8.00 x 8.00	203 x 203
12.00 x 6.00	305 x 152

Construction

Oiltight—NEMA Type 12 Wireway construction consists of:

- 14 gauge steel covers and bodies
- 10 gauge steel end flanges
- Seams continuously welded and ground smooth—no holes or knockouts
- Smooth, rounded edges on all sections and fittings to prevent damage to insulation
- Heavy butt hinges and strong latches to ensure complete seal between covers and bodies
- Quick-release cover latches that permit immediate access to wireway interior
- Oil-resistant gasket and adhesive

- Solid oil-resistant gasket positioned between flanges when sections and fittings are bolted together
- Gasketed quick-release connector that provides complete sealing at each joint

NOTE: A connector kit is furnished with each length and fitting.

Table 4 - Catalog Numbers—Type LJB Lay-in

Description	2.50 x 2.50 in. (64 x 64 mm)	4.00 x 4.00 in. (102 x 102 mm)	6.00 x 6.00 in. (152 x 152 mm)	8.00 x 8.00 in. (203 x 203 mm)	12.00 x 6.00 in. (305 x 152 mm)
1 in. Nipple	LJB201	LJB401	LJB601	—	—
2 in. Nipple	LJB202	LJB402	LJB602	—	—
3 in. Nipple	LJB203	LJB403	LJB603	—	—
6 in. Length	LJB206	LJB406	LJB606	LJB806	LJB12606
1 ft. Length	LJB21	LJB41	LJB61	LJB81	LJB1261
2 ft. Length	LJB22	LJB42	LJB62	LJB82	LJB1262
3 ft. Length	LJB23	LJB43	LJB63	LJB83	LJB1263
4 ft. Length	LJB24	LJB44	LJB64	LJB84	LJB1264
5 ft. Length	LJB25	LJB45	LJB65	LJB85	LJB1265
10 ft. Length[4]	LJB210	LJB410	LJB610	LJB810	LJB12610
45° Elbow Top Opening	LJB245LT	LJB445LT	LJB645LT	LJB845LT	LJB12645LT
45° Elbow Inside Opening	LJB245LI	LJB445LI	LJB645LI	LJB845LI	—
45° Elbow Outside Opening	LJB245LO	LJB445LO	LJB645LO	LJB845LO	—
90° Elbow Inside Opening	LJB290LI	LJB490LI	LJB690LI	LJB890LI	LJB12690LI
90° Elbow Outside Opening	LJB290LO	LJB490LO	LJB690LO	LJB890LO	LJB12690LO
90° Elbow Outside Top Opening	—	LJB490LOT	LJB690LOT	LJB890LOT	—
90° Elbow Top Opening	LJB290LT	LJB490LT	LJB690LT	LJB890LT	LJB12690LT
Tee—Top Opening	LJB2TT	LJB4TT	LJB6TT	LJB8TT	LJB126TT
Tee—Outside Opening	LJB2TO	LJB4TO	LJB6TO	LJB8TO	—
Cross	LJB2X	LJB4X	LJB6X	LJB8X	LJB126X
Junction Box	LJB2JB	LJB4JB	LJB6JB	LJB8JB	—
Telescopic Fitting	LJB2TF	LJB4TF	LJB6TF	LJB8TF	LJB126TF
Closing Plate	LJB2CP	LJB4CP	LJB6CP	LJB8CP	LJB126CP
Panel Adapter	LJB2A	LJB4A	LJB6A	LJB8A	LJB126A
Bracket Hanger	LJB2BH	LJB4BH	LJB6BH	LJB8BH	—
Drop Hanger	LJB2DH	LJB4DH	LJB6DH	LJB8DH	—
Extra Connector Kit[5]	LJB2C	LJB4C	LJB6C	LJB8C	LJB126C
90° Connector	LJB290C	LJB490C	LJB690C	LJB890C	LJB12690C
Reducer to 2 in.	—	LJB42R	—	—	—
Reducer to 4 in.	—	—	LJB64R	—	LJB1264R
Reducer to 6 in.	—	—	—	LJB86R	LJB1266R
Cut-off fitting—not Lay-in	LJB2CF	LJB4CF	LJB6CF	LJB8CF	LJB126CF
Cut-off fitting—Lay-in	LJB2CFL	LJB4CFL	LJB6CFL	LJB8CFL	LJB126CFL

4. 10 ft. straight lengths UL Listed for up to 10 ft. hanger spacing.
5. A connector kit is furnished with each length and fitting.

Table 4 - Catalog Numbers—Type LJB Lay-in (Continued)

Description	2.50 x 2.50 in. (64 x 64 mm)	4.00 x 4.00 in. (102 x 102 mm)	6.00 x 6.00 in. (152 x 152 mm)	8.00 x 8.00 in. (203 x 203 mm)	12.00 x 6.00 in. (305 x 152 mm)
Transposition Fitting—CCW (Straight)	LJB21CCW	LJB41CCW	LJB61CCW	—	—
Transposition Fitting—CW (Straight)	LJB21CW	LJB41CW	LJB61CW	—	—
Transposition Elbow—CCW	LJB290LCCW	LJB490LCCW	LJB690LCCW	LJB890LCCW	—
Transposition Elbow—CW	LJB290LCW	LJB490LCW	LJB690LCW	LJB890LCW	—
Swivel fitting—Wireway to Wireway	LJB2S	LJB4S	LJB6S	LJB8S	—
Swivel fitting—Wireway to Box	LJB2SB	LJB4SB	LJB6SB	LJB8SB	—
Flex Fitting—Feed-Thru	LJB2FF	LJB4FF	LJB6FF	LJB8FF	—
Barrier Kit—5 ft long w/hardware	—	LJB45B	LJB65B	LJB85B	—
5-piece Barrier Pack—5 ft long	—	LJB45BKM	LJB65BKM	—	—
5-piece Barrier Bracket—2 compartment	—	LJB4BB2C	LJB6BB2C	—	—
5-piece Barrier Bracket—3 compartment	—	LJB4BB3C	LJB6BB3C	—	—

Finish

Oiltight—NEMA Type 12 Wireway is furnished in ANSI 49 gray polyester powder finish inside and out over phosphatized surfaces. The sealing plate and quick-release latches are zinc plated with yellow chromate coating.

Figure 27 - Various Components for Oiltight Type 12 Wireway

Industry Standards

Oiltight—NEMA Type 12 Wireway is in compliance with the following industry standards:

- UL Listed to File E27524, 870
- NEMA/EEMAC Type 12
- JIC standards EGP-1–1967 and EMP-1–1967
- CSA Listed to File LL42184, Type 12
- IEC 60529, IP54

Wireway Components

The Oiltight—NEMA Type 12 Wireways Sample Layout, page 23 illustrates how most of the Oiltight—NEMA Type 12 Wireway sections and fittings could be used in an actual wireway run. The covers have been omitted to present the lay-in feature more clearly. Many different sections and fittings can be combined in any configuration desired.

Figure 28 - Oiltight—NEMA Type 12 Wireways Sample Layout

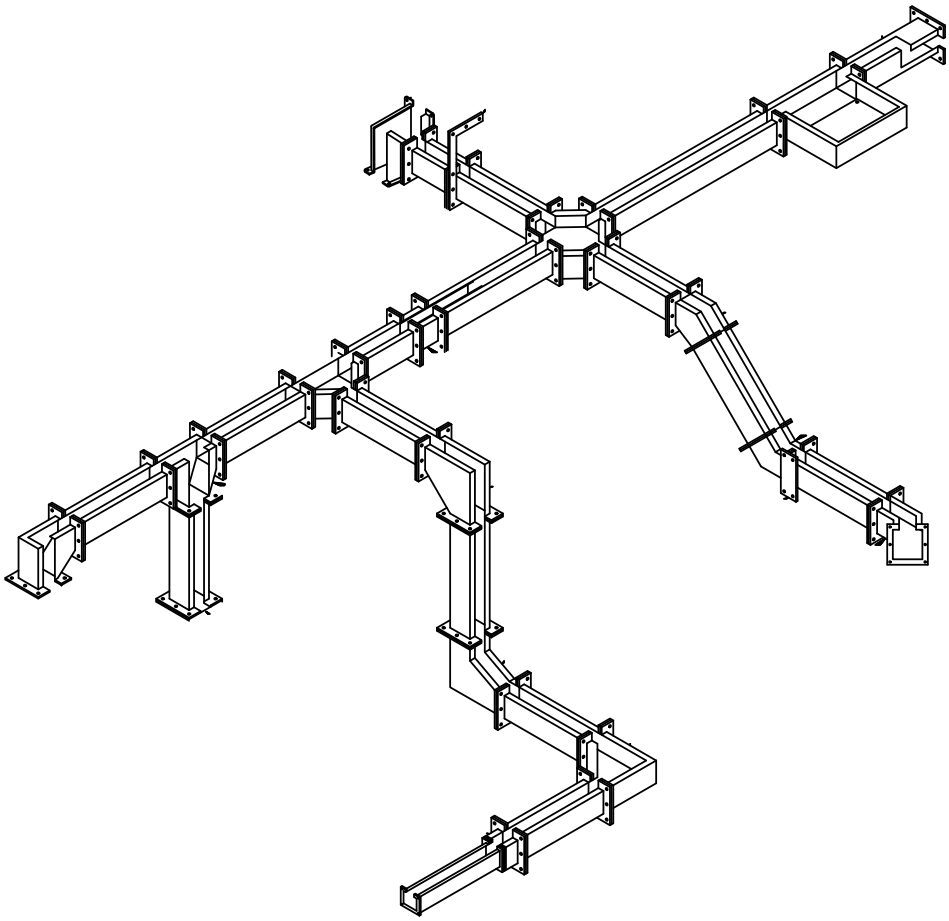

Figure 29 - Straight Section

Available in lengths from 1 ft. (30 cm) to 10 ft. (305 cm).

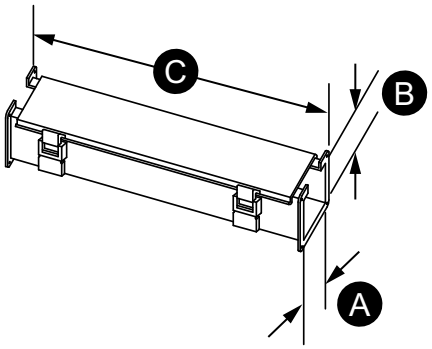

Figure 30 - Lay-In Cut-Off Fitting

For lengths of 9.00 in. (229 mm) to 15.00 in. (381 mm) only. Body comes in two pieces. Shorten body and cover to the desired length and weld together.

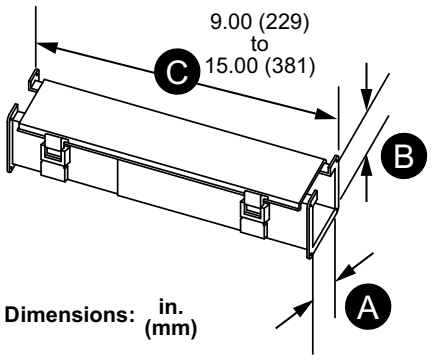

Figure 31 - Non-Lay-In Cut-Off Fitting

For lengths up to 12.00 in. (305 mm). Shorten body to desired length and weld on flange. This is not a “lay-in” fitting, but is often used when entering an enclosure.

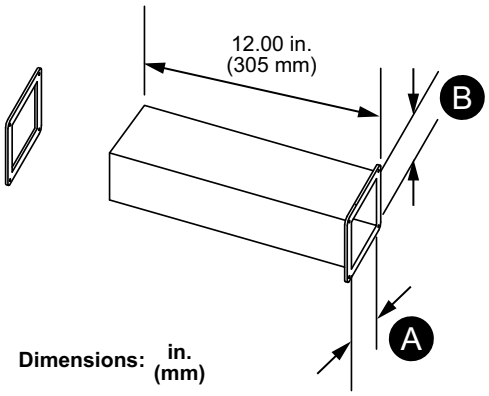

Figure 32 - Lay-In Telescope Fitting

Length is easily adjustable from 1.00 in. (25 mm) to 7.00 in. (178 mm). No cutting or welding required.

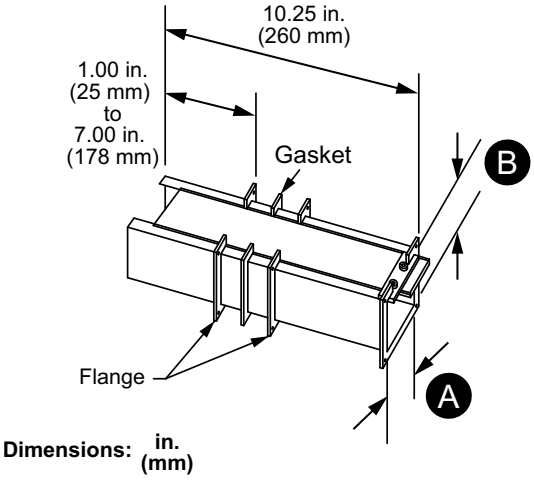

Figure 33 - Junction Box

Length is easily adjustable from 1.00 in. (25 mm) to 7.00 in. (178 mm). No cutting or welding required.

The junction box has a removable panel on which terminal blocks and other components may be mounted. See Junction Box Dimensions, page 25 for dimensions.

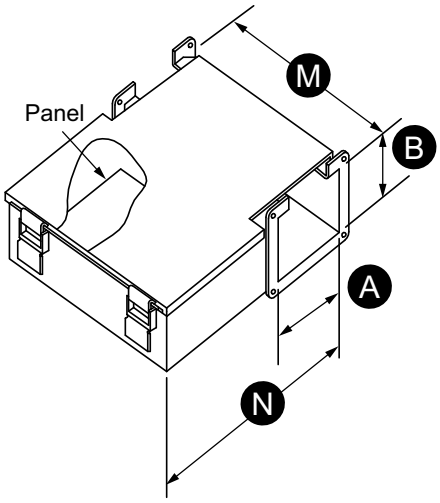

Table 5 - Junction Box Dimensions

Part Number	Dimensions in inches	Dimensions in (mm)
F-22LJ	8.75 x 6.88	222 x 175
F-44LJ	10.75 x 8.88	273 x 225
F-66LJ	12.75 x 10.88	324 x 276
F-88LJ	14.75 x 12.88	375 x 327

Figure 34 - Cross

Used when there are four branches, all open along the same side.

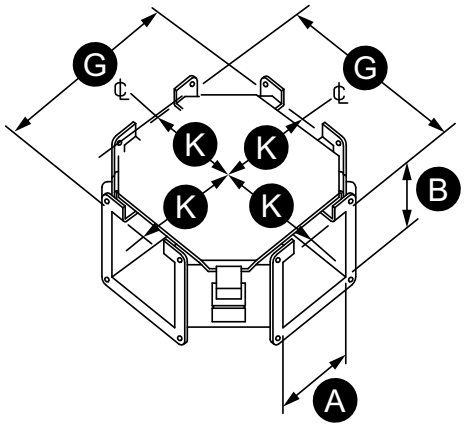

Figure 35 - 90° Elbow Top Opening

Because sections of lay-in wireway can be mounted with covers oriented in any direction, three different 90° elbows are offered. Proper selection allows the user to maintain the same access and thereby preserve the lay-in feature for right-angle installations.

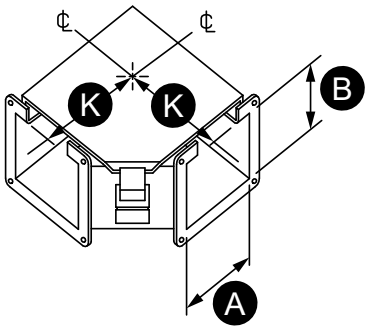

Figure 36 - 90° Elbow Inside Opening

Because sections of lay-in wireway can be mounted with covers oriented in any direction, three different 90° elbows are offered. Proper selection allows the user to maintain the same access and thereby preserve the lay-in feature for right-angle installations.

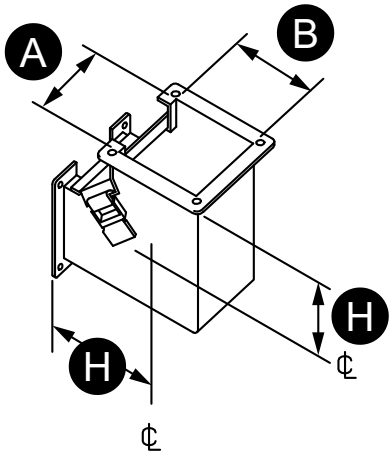

Figure 37 - 90° Elbow Outside Opening

Because sections of lay-in wireway can be mounted with covers oriented in any direction, three different 90° elbows are offered. Proper selection allows the user to maintain the same access and thereby preserve the lay-in feature for right-angle installations.

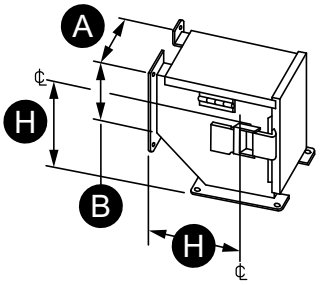

Figure 38 - 90° Elbow Outside Top Opening

This elbow fitting allows a vertical drop to equipment below at a 90° corner while maintaining the top opening lay-in feature.

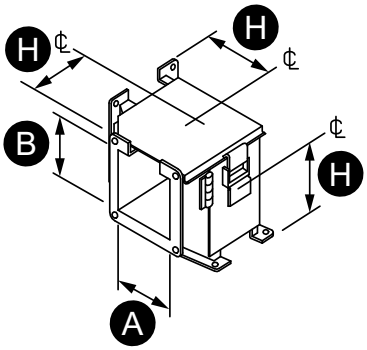

Figure 39 - 45° Elbow Top Opening

Similar to the 90° elbows in design and function, but is used where a 45° angle is needed.

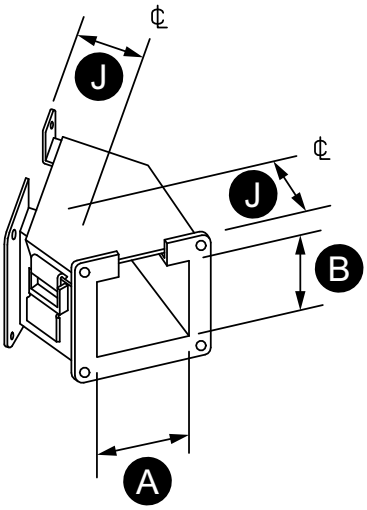

Figure 40 - 45° Elbow Inside Opening

Similar to the 90° elbows in design and function, but is used where a 45° angle is needed.

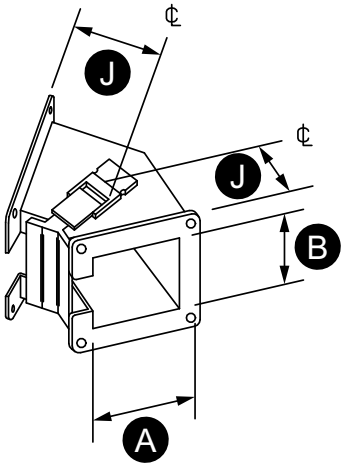

Figure 41 - 45° Elbow Outside Opening

Similar to the 90° elbows in design and function, but is used where a 45° angle is needed.

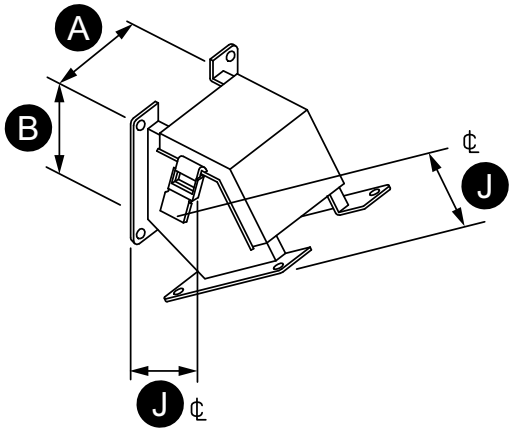

Figure 42 - Tee Top Opening

This fitting is used when the covers of all three branches of the wireway run are open along the same side.

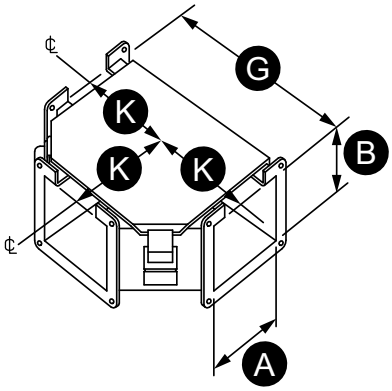

Figure 43 - Outside Tee Top Opening

This fitting is used when the covers of all three branches of the wireway run are open along the same side.

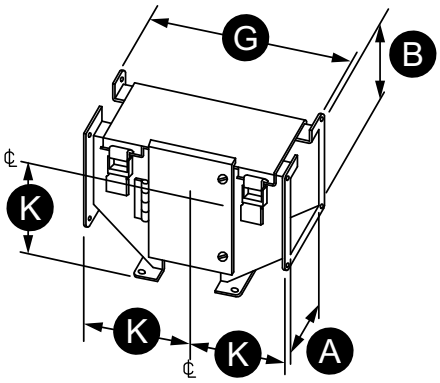

Figure 44 - Nipple

Available in lengths of 1.00 in. (25 mm), 2.00 in. (51 mm), 3.00 in. (76 mm), and 6.00 in. (152 mm).

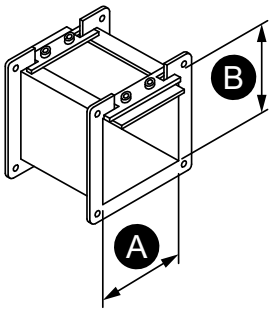

Figure 45 - Drop Hanger

Hangers are used to support a wireway run. The drop hanger is normally attached to an overhead beam or ceiling, while the bracket hanger can be used for wall, floor, or ceiling installations.

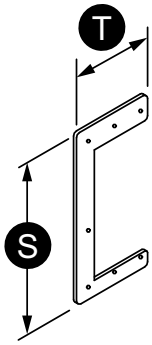

Figure 46 - Bracket Hanger

Hangers are used to support a wireway run. The drop hanger is normally attached to an overhead beam or ceiling, while the bracket hanger can be used for wall, floor, or ceiling installations.

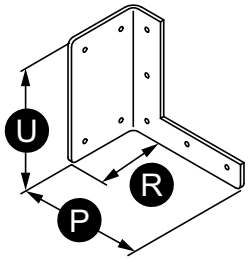

Figure 47 - Box Connector

When wireway enters an enclosure, a box connector should be used on the inside of the enclosure to ensure a tight seal.

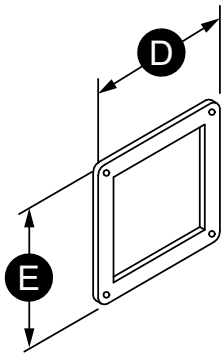

Figure 48 - Closing Plate

Used to seal the end of a wireway section or run.

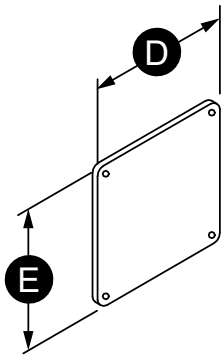

Figure 49 - Clockwise Transposition Section

This fitting is used when it is necessary to rotate the open side of the wireway run by 90° and still retain the lay-in feature.

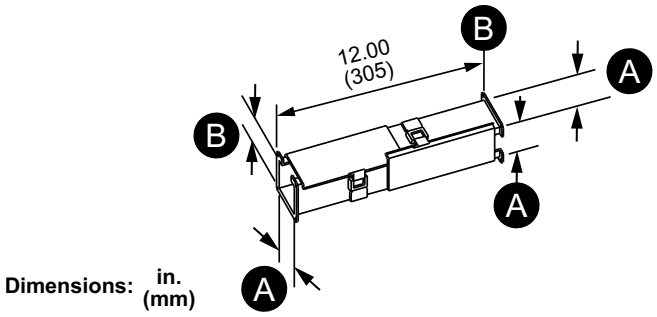

Figure 50 - Counter-Clockwise Transposition Section

This fitting is used when it is necessary to rotate the open side of the wireway run by 90° and still retain the lay-in feature.

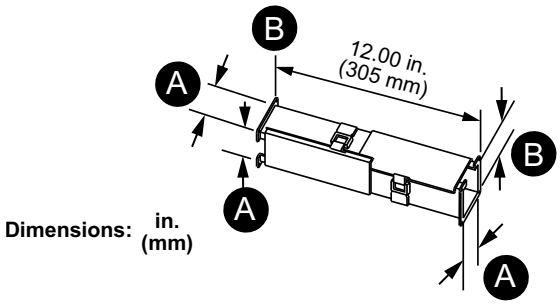

Figure 51 - 90° Elbow Clockwise Transposition

This fitting is used when it is necessary to rotate the open side of the wireway run by 90° and still retain the lay-in feature.

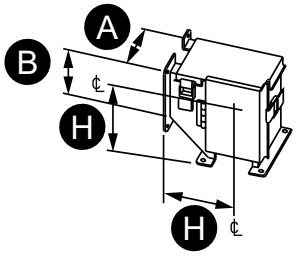

Figure 52 - 90° Elbow Counter-Clockwise Transposition

This fitting is used when it is necessary to rotate the open side of the wireway run by 90° and still retain the lay-in feature.

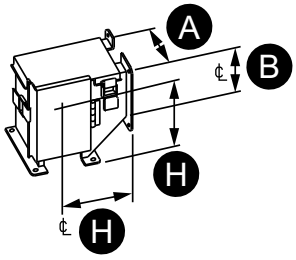

Figure 53 - Barrier, Bracket Mounted

Divides wireway into two or three compartments. Spring steel brackets hold barriers in place by friction fit inside wireway. Order barrier and bracket separately. Recommended spacing in increments of 3 ft. (91 cm).

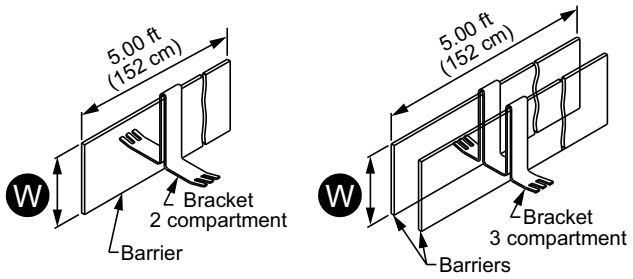

Dimensions: **in. (mm)**

Height of W		Order	
in.	**(mm)**	**in.**	**(mm)**
3.00	(76)	4.00 x 4.00	(102 x 102)
4.50	(114)	6.00 x 6.00	(152 x 152)

Figure 54 - Barrier Kit (Bolt-On)

Divides wireway into two or more compartments. Barriers are fastened to wireway sections with screws. Sealing washers are included.

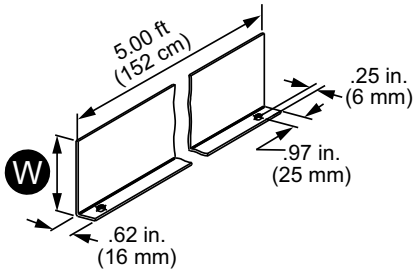

Height of W		Order	
in.	**(mm)**	**in.**	**(mm)**
3.00	(76)	4.00 x 4.00	(102 x 102)
4.50	(114)	6.00 x 6.00	(152 x 152)
6.00	(152)	8.00 x 8.00	(203 x 203)

Figure 55 - Reducer

This fitting permits the lay-in feature to be retained when reducing to a smaller wireway size.

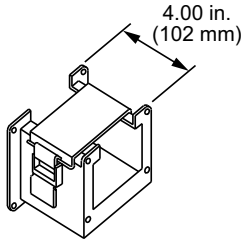

Dimensions: **in. (mm)**

Figure 56 - Connector

When joining a lay-in section or fitting to a closure plate, a box connector, a non-lay-in cut-off fitting, or any similar non-lay-in section or fitting, a 90° angle sealing plate is required at each junction. This plate is furnished with fittings as noted in Catalog Numbers—Type LJB Lay-in, page 21. Additional 90° angle sealing plates may be required in some cases. Plate includes a flange gasket and flange screws, not shown.

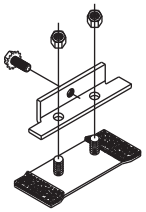

Figure 57 - Extra Connector Kit

This hinged sealing plate permits quick and easy access to the wireway interior without using a tool.

Patent number 4,398,564

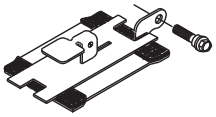

Figure 58 - Flange Detail

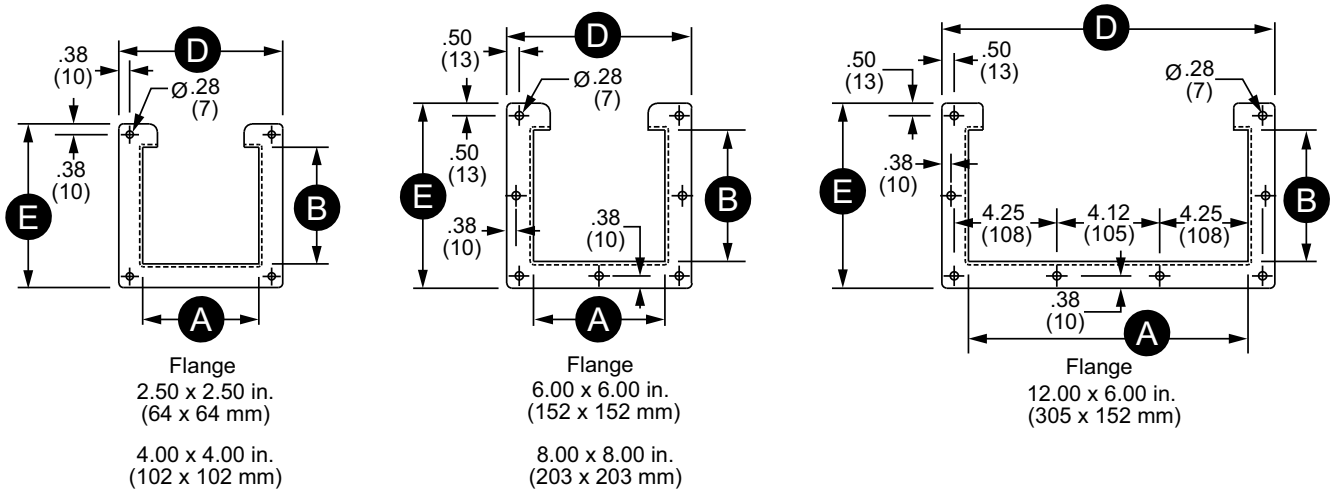

Dimensions: **in. (mm)**

Table 6 - Dimensions for Wireway Components

A x B	C						D	E	G	H	J	K	M	N	P	R	S	T	U
in. (mm)	in. (mm)	in. (mm)	in. (mm)	in. (mm)	in. (mm)	in. (mm)	in. (mm)	in. (mm)	in. (mm)	in. (mm)	in. (mm)	in. (mm)	in. (mm)	in. (mm)	in. (mm)	in. (mm)	in. (mm)	in. (mm)	in. (mm)
2.50 x 2.50 (64 x 64)	6.00 (152)	12.00 (305)	24.00 (610)	48.00 (1219)	60.00 (1524)	120.00 (3048)	3.88 (99)	3.88 (99)	8.50 (216)	4.25 (108)	2.00 (51)	4.25 (108)	12.00 (305)	10.25 (260)	4.62 (117)	3.62 (92)	9.25 (235)	4.50 (114)	4.38 (111)
4.00 x 4.00 (102 x 102)	6.00 (152)	12.00 (305)	24.00 (610)	48.00 (1219)	60.00 (1524)	120.00 (3048)	5.38 (137)	5.38 (137)	10.00 (254)	5.00 (127)	2.44 (62)	5.00 (127)	14.00 (356)	13.88 (353)	6.12 (155)	3.62 (92)	11.75 (298)	6.00 (152)	5.88 (149)
6.00 x 6.00 (152 x 152)	6.00 (152)	12.00 (305)	24.00 (610)	48.00 (1219)	60.00 (1524)	120.00 (3048)	7.62 (194)	7.62 (194)	12.00 (305)	6.00 (152)	3.00 (76)	6.00 (152)	16.00 (406)	17.88 (454)	8.25 (210)	3.62 (92)	15.25 (387)	8.12 (206)	7.88 (200)
8.00 x 8.00 (203 x 203)	6.00 (152)	12.00 (305)	24.00 (610)	48.00 (1219)	60.00 (1524)	120.00 (3048)	9.62 (244)	9.62 (244)	14.00 (356)	7.00 (178)	3.75 (95)	7.00 (178)	18.00 (457)	21.88 (556)	10.25 (260)	3.62 (92)	20.56 (522)	12.12 (308)	11.25 (286)
12.00 x 6.00 (305 x 152)	6.00 (152)	12.00 (305)	24.00 (610)	48.00 (1219)	60.00 (1524)	120.00 (3048)	13.62 (346)	7.62 (194)	18.00 (457)	6.00 (152)	4.75 (121)	9.00 (229)	—	—	—	—	—	—	—

NOTE: Dimensions H, J, and K are from intersections of center lines. All dimensions are to outside surfaces. Allow 0.12 in. (3 mm) for flange gasket when two pieces are joined. If, however, one piece is a “Closure Plate,” “Box Connector,” “Cut-off Fitting,” or non-lay-in wireway, allow.25 in. (6 mm) for the thicker gasket which is used.

Accessories

Touch-up paint (order no. PK49SP)

Raintight—NEMA Type 3R Wireway

Application

Raintight—NEMA Type 3R Wireway is designed to protect electrical wiring in outdoor installations against rain, sleet, and snow or indoors against dripping water. All sections and fittings are completely open on one side so wires and cables can be laid in along an entire wireway run. No pulling through of wires or cables is required with this design.

Figure 59 - Raintight Lay-in—NEMA Type 3R Wireway

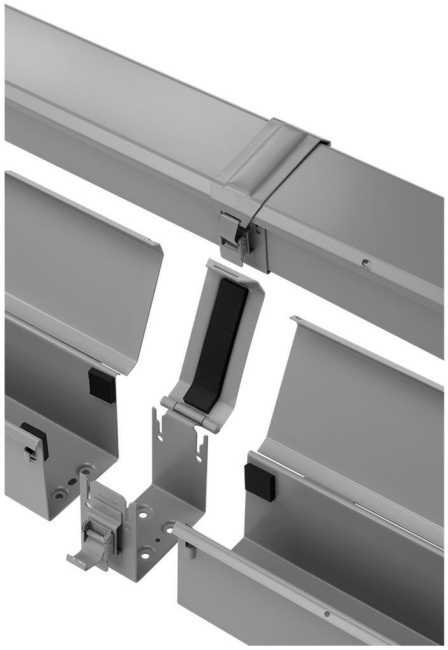

A complete selection of sections and fittings is available in three sizes:

Inches	Millimeters
4.00 x 4.00	102 x 102
6.00 x 6.00	152 x 152
8.00 x 8.00	203 x 203

Construction

Raintight NEMA —Type 3R Wireway construction consists of:

- 16 gauge galvanized steel straight sections in sizes:
  - 4.00 x 4.00 in. (102 x 102 mm)
  - 6.00 x 6.00 in. (152 x 152 mm)
- 14 gauge galvanized steel straight sections in size:
  - 8.00 x 8.00 in. (203 x 203 mm)

NOTE: All other components of this product line are 14 gauge steel.

- Open top assembly protection for wire and cable insulation that might otherwise be damaged in a pull through wiring system
- Self-connecting system with minimum usage of fasteners
- Removable covers held firmly closed with quick-release latches to maintain rain-tightness throughout
- Quick-release cover latches permit immediate access to wireway interior

Table 7 - Catalog Numbers—Raintight Wireway

Description	4.00 x 4.00 in. (102 x 102 mm)	6.00 x 6.00 in. (152 x 152 mm)	8.00 x 8.00 in. (203 x 203 mm)
1 ft. Length	LDRB41M	LDRB61M	LDRB81M
5 ft. Length	LDRB45M	LDRB65M	LDRB85M
10 ft. Length	LDRB410M	LDRB610M	LDRB810M
90° Elbow	LDRB490L	LDRB690L	LDRB890L
30° Sweep Elbow	LDRB430SE	LDRB630SE	LDRB830SE
Tee	LDRB4T	LDRB6T	LDRB8T
Junction Box	LDRB4J	LDRB6J	LDRB8J
Panel Adapter	LDRB44A	LDRB66A	LDRB88A
Connector[6]	LDRB4C	LDRB6C	LDRB8C
Closing Plate	LDRB4CP	LDRB6CP	LDRB8CP
Drop Hanger	LDRB4DH	LDRB6DH	LDRB8DH
Wall Hanger	LDRB4WH	LDRB6WH	LDRB8WH
Reducer	—	LDRB64R	LDRB86R

Finish

Raintight—NEMA Type 3R Wireway is furnished in ANSI 49 gray polyester powder finish over galvanized steel.

Industry Standards

Raintight—NEMA Type 3R Wireway is in compliance with the following industry standards:

- NEMA/EEMAC Type 3R
- IEC 60529, IP32

Wireway Components

The Raintight—NEMA Type 3R Wireway Sample Layout, page 37 illustrates how most of the Raintight—NEMA Type 3R Wireway sections and fittings could be used in an actual wireway run. Many different sections and fittings can be combined into any configuration needed.

6. Add connectors for all lengths and fittings.

Figure 60 - Raintight—NEMA Type 3R Wireway Sample Layout

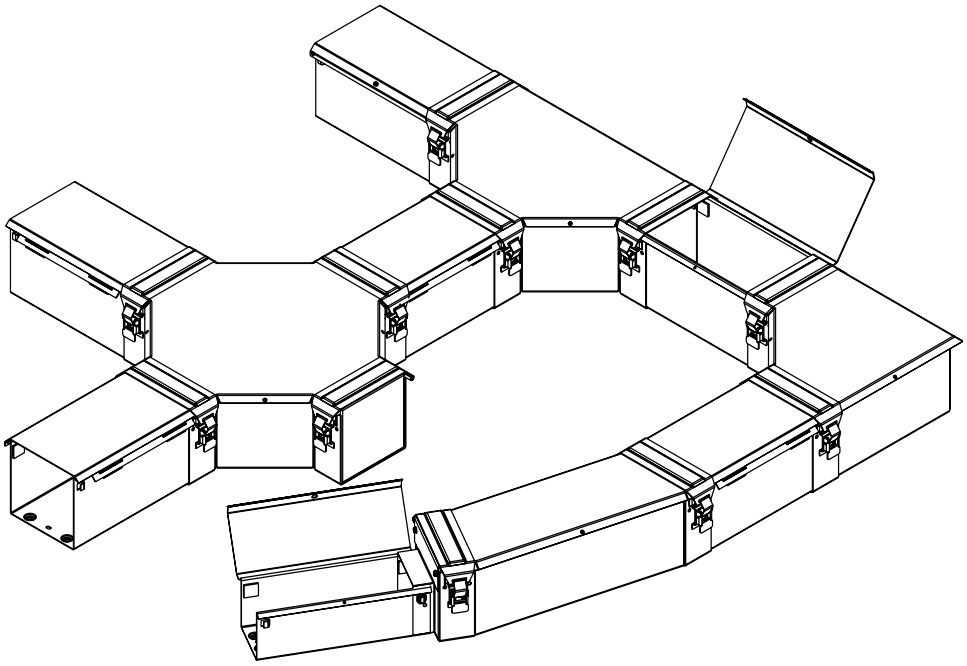

Figure 61 - Straight Section

Available in lengths from 1 ft. (30 cm) to 10 ft. (305 cm).

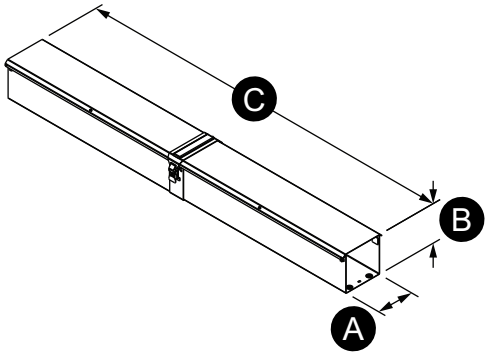

Figure 62 - 90° Flush Tee

Use wherever flush mounting against a vertical surface is required.

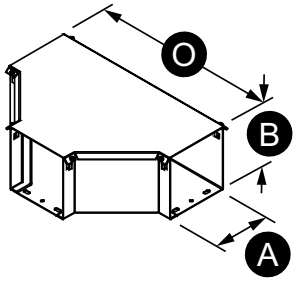

Figure 63 - 30° Sweep Elbow

When a large radius is needed, use this sweep elbow.

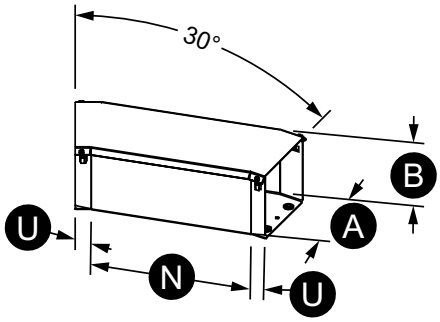

Figure 64 - 90° Elbow-Tee-Cross

Use when there are four branches. It can be used as a 90° Elbow or a 90° Flush Tee by adding Closure Plates.

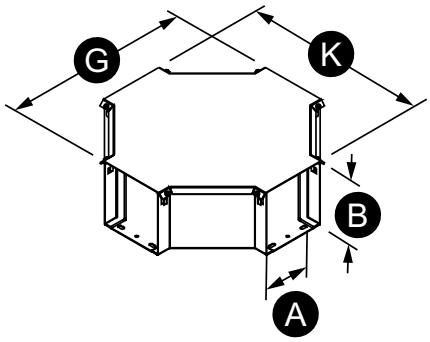

Figure 65 - 90° Elbow

Used whenever a right-angle installation is needed.

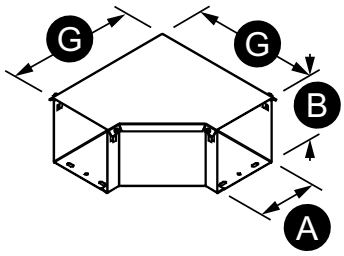

Figure 66 - Panel Adapter

Allows the wireway to be securely connected to an enclosure.

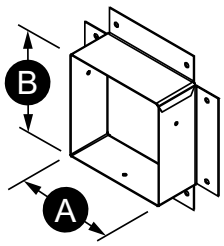

Figure 67 - Closing Plate

Closes the end of a wireway section or run.

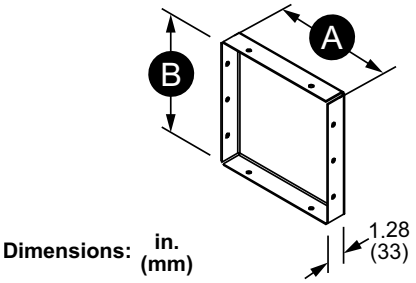

Dimensions: **in. (mm)**

Figure 68 - Reducer

Used to reduce to a smaller wireway size.

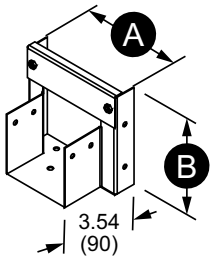

Dimensions: **in. (mm)**

Figure 69 - Connector

Used to rigidly join fittings to straight sections.

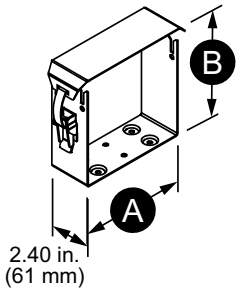

Dimensions: **in. (mm)**

Figure 70 - Drop Hanger

Used to support a wireway run.

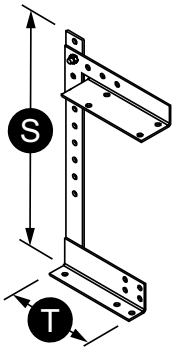

Figure 71 - Bracket Hanger

Used to support a wireway run.

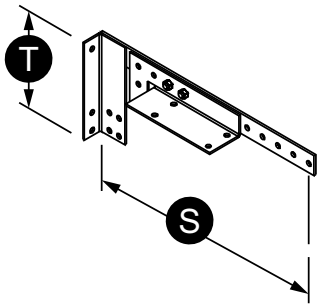

Figure 72 - Wall Hanger

Used to support a wireway run.

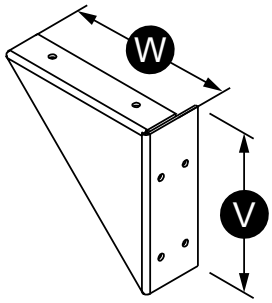

Table 8 - Dimensions for Wireway Components

A x B	C			G	K	N	O	P	Q	S	T	U	V	W
in. (mm)	in. (mm)	in. (mm)	in. (mm)	in. (mm)	in. (mm)	in. (mm)	in. (mm)	in. (mm)	in. (mm)	in. (mm)	in. (mm)	in. (mm)	in. (mm)	in. (mm)
4.00 x 4.00 (102 x 102)	12.00 (305)	60.00 (1524)	120.00 (3048)	16.00 (406)	16.00 (406)	13.00 (330)	16.00 (406)	10.00 (254)	10.00 (254)	9.50 (241)	4.50 (114)	1.25 (31)	5.00 (127)	5.00 (127)
6.00 x 6.00 (152 x 152)	12.00 (305)	60.00 (1524)	120.00 (3048)	18.00 (457)	18.00 (457)	13.00 (330)	18.00 (457)	12.00 (305)	12.00 (305)	14.00 (356)	5.50 (140)	1.25 (31)	7.00 (178)	7.00 (178)
8.00 x 8.00 (203 x 203)	12.00 (305)	60.00 (1524)	120.00 (3048)	20.00 (508)	20.00 (508)	13.00 (330)	20.00 (508)	14.00 (356)	14.00 (356)	14.00 (356)	8.00 (203)	1.25 (310)	9.00 (229)	9.00 (229)

NOTE: All dimensions are to outside surfaces.

Raintight—NEMA Type 3R Trough

Application

The Raintight—NEMA Type 3R Trough, page 41 is designed to protect electrical wiring in outdoor installations against rain, sleet, and snow or indoors against dripping water.

Figure 73 - Raintight—NEMA Type 3R Trough

Construction

Raintight—NEMA Type 3R Trough construction consists of:

- 16 gauge or 14 gauge galvanized steel
- Drip shield top and seam-free sides, front, and back that protect from rain, snow, or sleet
- Slip-on removable cover fastened with captivate, plated steel screws along bottom edge
- Embossed mounting holes on back of enclosure
- Provision for padlocking
- No gasketing or knockouts

Figure 74 - Raintight Trough Dimensions

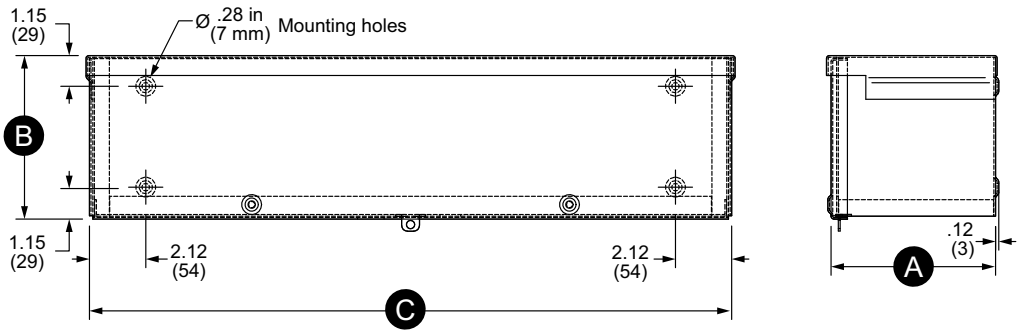

Dimensions: in. (mm)

Table 9 - Catalog Numbers—Raintight Trough

C	A x B				
Length	4.00 x 4.00 in. (102 x 102 mm)	6.00 x 6.00 in. (152 x 152 mm)	8.00 x 8.00 in. (203 x 203 mm)	10.00 x 10.00 in. (254 x 254 mm)	12.00 x 12.00 in. (305 x 305 mm)
1 ft.	RDB41	RDB61	—	—	—
2 ft.	RDB42	RDB62	RDB82	RDB102	RDB122
3 ft.	RDB43	RDB63	RDB83	RDB103	RDB123
4 ft.	RDB44	RDB64	RDB84	—	—
5 ft.	RDB45	RDB65	RDB85	RDB105	RDB125
6 ft.	—	RDB66	RDB86	RDB106	RDB126

Finish

Raintight—NEMA Type 3R Trough is furnished in ANSI 49 gray polyester powder finish over galvanized steel.

Industry Standards (Trough)

Raintight—NEMA Type 3R Trough is in compliance with the following industry standards:

- UL Listed to File E27524, 870
- NEMA/EEMAC Type 3R
- CSA Listed to File LL42184, Type 3R
- IEC 60529, IP32

Accessories (Trough)

Touch-up paint (order no. PK49SP)

Schneider Electric
800 Federal Street
Andover MA 01810
USA

1-888-778-2733

www.se.com

As standards, specifications, and design change from time to time, please ask for confirmation of the information given in this publication.

© 1986 – 2025 Schneider Electric. All rights reserved.

5100CT0101