Product data sheet

Specifications

remote receiver module, Modicon TM5, communication between RIO, distribute power

TM5SBER2

Product availability: Non-Stock - Not normally stocked in distribution facility

Main

Range of Product	Modicon TM5
Product or Component Type	Remote receiver module
Product Compatibility	Logic controller Motion controller
Range Compatibility	Modicon M258 Modicon LMC058

Complementary

Local signalling	1 LED green power supply 1 LED red power bus current 1 LED red power supply 1 LED yellow communication data bus
Housing Colour	Grey
Height	3.9 in (99 mm)
Width	0.5 in (12.5 mm)
Depth	3.0 in (75 mm)
Net Weight	0.055 lb(US) (0.025 kg)

Environment

IP Degree of Protection	IP20 IP67
Marking	CE
Product certifications	CSA CULus C-tick GOST-R
Standards	CSA C22.2 No 142 CSA C22.2 No 213 IEC 61131-2 UL 508
Ambient air temperature for operation	32…122 °F (0…50 °C) vertical installation) 32…131 °F (0…55 °C) without derating horizontal installation) 32…140 °F (0…60 °C) with derating factor horizontal installation)
Ambient air temperature for storage	-13…158 °F (-25…70 °C)
Relative humidity	5…95 % without condensation
Operating altitude	0...6561.68 ft (0...2000 m)
Pollution degree	2
Vibration resistance	1 gn 8.4…150 Hz) on DIN rail 3.5 mm 5…8.4 Hz) on DIN rail

Price is “List Price” and may be subject to a trade discount – check with your local distributor or retailer for actual price.

Disclaimer: This documentation is not intended as a substitute for and is not to be used for determining suitability or reliability of these products for specific user applications

Shock resistance	15 gn 11 ms

Ordering and shipping details

Category	US1PC1222532
Discount Schedule	PC12
GTIN	3595864074870
Returnability	No
Country of origin	AT

Packing Units

Unit Type of Package 1	PCE
Nbr. of units in pkg.	1
Package 1 Height	1.181 in (3.000 cm)
Package 1 Width	2.362 in (6.000 cm)
Package 1 Length	4.134 in (10.500 cm)
Package weight(Lbs)	2.081 oz (59.000 g)
Unit Type of Package 2	S02
Number of Units in Package 2	50
Package 2 Height	5.906 in (15.000 cm)
Package 2 Width	11.811 in (30.000 cm)
Package 2 Length	15.748 in (40.000 cm)
Package 2 Weight	7.275 lb(US) (3.300 kg)

Contractual warranty

Warranty (in months)	18

Environmental Data

Schneider Electric aims to achieve Net Zero status by 2050 through supply chain partnerships, lower impact materials, and circularity via our ongoing “Use Better, Use Longer, Use Again” campaign to extend product lifetimes and recyclability.

Environmental Data explained >

How we assess product sustainability >

Environmental footprint

Environmental Disclosure	Product Environmental Profile

Use Better

Materials and Substances

Packaging made with recycled cardboard	No
Packaging without single use plastic	Yes
EU RoHS Directive	Pro-active compliance (Product out of EU RoHS legal scope)
REACh Regulation	REACh Declaration
California proposition 65	WARNING: This product can expose you to chemicals including: Lead and lead compounds, which is known to the State of California to cause cancer and birth defects or other reproductive harm. For more information go to www.P65Warnings.ca.gov
PVC free	Yes

Use Again

Repack and remanufacture

Circularity Profile	End of Life Information
Take-back	No
WEEE Label	The product must be disposed on European Union markets following specific waste collection and never end up in rubbish bins.

Dimensions Drawings

TM5 Slice

Dimensions

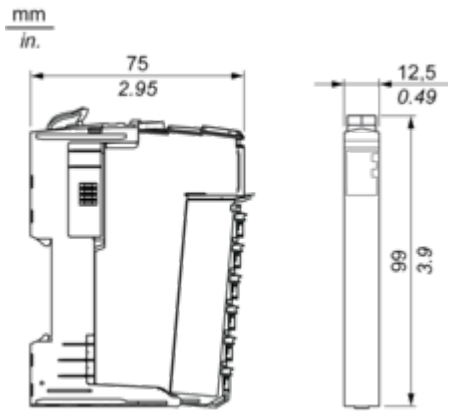

Mounting and Clearance

TM5 System

Spacing Requirements

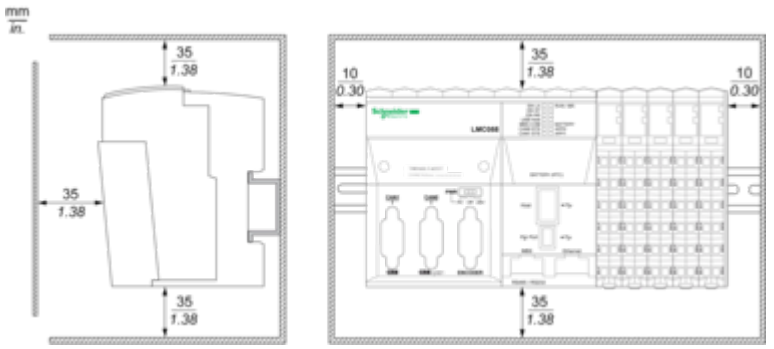

Mounting on a DIN Rail

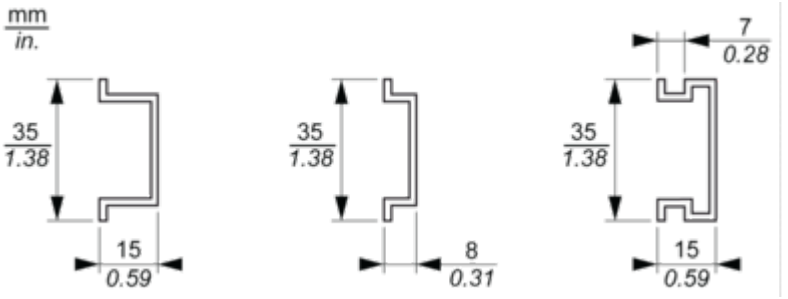

Connections and Schema

TM5 System Wiring Recommendations

Wire Sizes to Use with the Removable Spring Terminal Blocks

mm / in. 9 / 0.35				
mm²	0,08...2,5	0,25...2,5	0,25...1,5	2 x 0,25...2 x 0,75
AWG	28...14	24...14	24...16	2 x 24...2 x 18

Receiver Electronic Module

Wiring Diagram

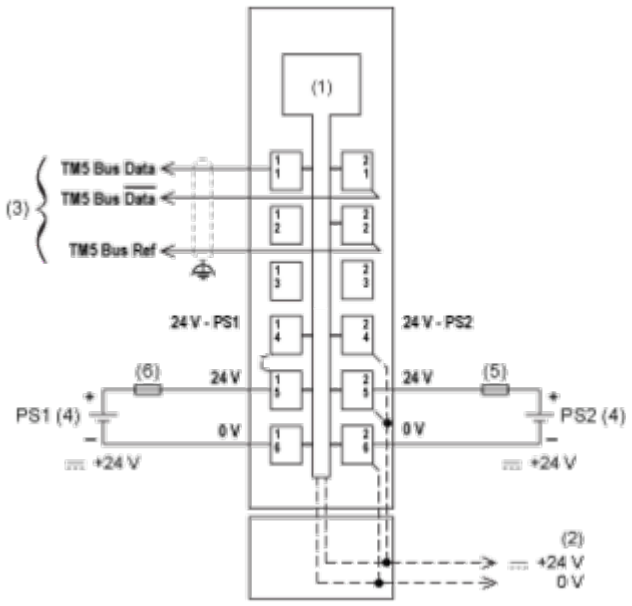

(1) Internal electronics
(2) 24 Vdc I/O power segment integrated into the bus bases
(3) TM5 expansion bus cable (TCSXCNNXNX100)
(4) PS1/PS2: External isolated SELV power supply 24 Vdc limited to 200 VA for UL508 conformance, or limited to 150 VA for CSA 22.2, N° 142 conformance
(5) External fuse, Type T slow-blow: 10 A max., 250 V
(6) External fuse, Type T slow-blow: 1 A, 250 V