Product data sheet

Specifications

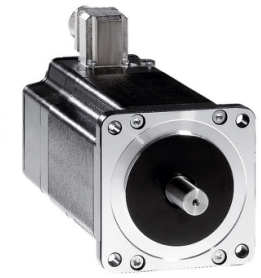

3-phase stepper motor - 6.78Nm - shaft Ø 14mm - L=128 mm - w/o brake - term box

BRS39BW470ABA

Product availability: Non-Stock - Not normally stocked in distribution facility

Main

Range Compatibility	Lexium SD3
Product or Component Type	Motion control motor
Device short name	BRS3
Maximum mechanical speed	3000 rpm
Motor Type	3-phase stepper motor
Number of motor poles	6
Supply voltage limits	230 V AC 325 V DC
Mounting Support	Flange
Motor flange size	3.3 in (85 mm)
Length	6.7 in (171 mm)
Centring collar diameter	2.9 in (73 mm)

Complementary

Centring collar depth	0.08 in (2 mm)
Number of mounting holes	4
Mounting holes diameter	0.3 in (6.5 mm)
Circle diameter of the mounting holes	3.90 in (98.99 mm)
Electrical Connection	Terminal box
Holding brake	Without
Shaft end	Untapped
Second shaft	Without second shaft end
Shaft diameter	0.6 in (14 mm)
Shaft length	1.2 in (30 mm)
nominal torque	53.1 lbf.in (6 N.m)
Peak stall torque	51.16 lbf.in (5.78 N.m)
Continuous stall torque	51.16 lbf.in (5.78 N.m)
Holding torque	60.008 lbf.in (6.78 N.m)
Rotor inertia	3.3 kg.cm²
Resolution	1.8 °, 0.9 °, 0.72 °, 0.36 °, 0.18 °, 0.09 °, 0.072 °, 0.036 ° step angle 200, 400, 500, 1000, 2000, 4000, 5000, 10000 steps number of full steps per revolution

Price is “List Price” and may be subject to a trade discount – check with your local distributor or retailer for actual price.

Disclaimer: This documentation is not intended as a substitute for and is not to be used for determining suitability or reliability of these products for specific user applications

Accuracy error	+/- 6 arc min
Maximum starting frequency	5.3 kHz
Line Rated Current	2.25 A
Resistance	6.5 Ohm winding)
Time constant	10 ms
Maximum radial force Fr	110 N first shaft end) 50 N second shaft end)
Maximum axial force Fa	175 N tensile force) 30 N force pressure)
Service life in hours	20000 h bearing)
Angular acceleration	200000 rad/s²
Net Weight	9.5 lb(US) (4.3 kg)

Environment

Standards	EN 50347 IEC 60072-1
Type of cooling	Natural convection
Ambient air temperature for operation	-13…104 °F (-25…40 °C)
Ambient Air Temperature for Storage	-13…158 °F (-25…70 °C)
Operating altitude	<= 3280.84 ft (1000 m) without power derating
Relative humidity	15…85 % without condensation
Vibration resistance	20 m/s² maximum A EN/IEC 60034-14
IP degree of protection	IP41 shaft bushing: conforming to EN/IEC 60034-5 IP56 total except shaft bushing: conforming to EN/IEC 60034-5
Temperature class	F winding IEC/EN 60034-1

Ordering and shipping details

Category	US1PC5518284
Discount Schedule	PC55
GTIN	3389119223980
Returnability	No
Country of origin	DE

Packing Units

Unit Type of Package 1	PCE
Nbr. of units in pkg.	1
Package 1 Height	8.9 in (22.5 cm)
Package 1 Width	7.5 in (19 cm)
Package 1 Length	15.7 in (40 cm)
Package weight(Lbs)	10.349 lb(US) (4.694 kg)
Unit Type of Package 2	S06
Number of Units in Package 2	12
Package 2 Height	28.9 in (73.5 cm)

Package 2 Width	23.6 in (60 cm)
Package 2 Length	31.5 in (80 cm)
Package 2 Weight	152.74 lb(US) (69.28 kg)
Unit Type of Package 3	P06
Number of Units in Package 3	12
Package 3 Height	30.3 in (77 cm)
Package 3 Width	31.5 in (80 cm)
Package 3 Length	23.6 in (60 cm)
Package 3 Weight	142.82 lb(US) (64.78 kg)

Contractual warranty

Warranty	18 months

Environmental Data

Schneider Electric aims to achieve Net Zero status by 2050 through supply chain partnerships, lower impact materials, and circularity via our ongoing “Use Better, Use Longer, Use Again” campaign to extend product lifetimes and recyclability.

Environmental Data explained >

How we assess product sustainability >

Environmental footprint

Carbon footprint (kg CO2 eq, Total Life cycle)	1829
Environmental Disclosure	Product Environmental Profile

Use Better

Materials and Substances

Packaging made with recycled cardboard	Yes
Packaging without single use plastic	No
EU RoHS Directive	Pro-active compliance (Product out of EU RoHS legal scope)
REACh Regulation	REACh Declaration
California proposition 65	WARNING: This product can expose you to chemicals including: Lead and lead compounds, which is known to the State of California to cause cancer and birth defects or other reproductive harm. For more information go to www.P65Warnings.ca.gov
PVC free	Yes

Use Again

Repack and remanufacture

Circularity Profile	No need of specific recycling operations
Take-back	No
WEEE Label	The product must be disposed on European Union markets following specific waste collection and never end up in rubbish bins.

Dimensions Drawings

Dimensions

3-Phase Stepper Motor in Terminal Box Version

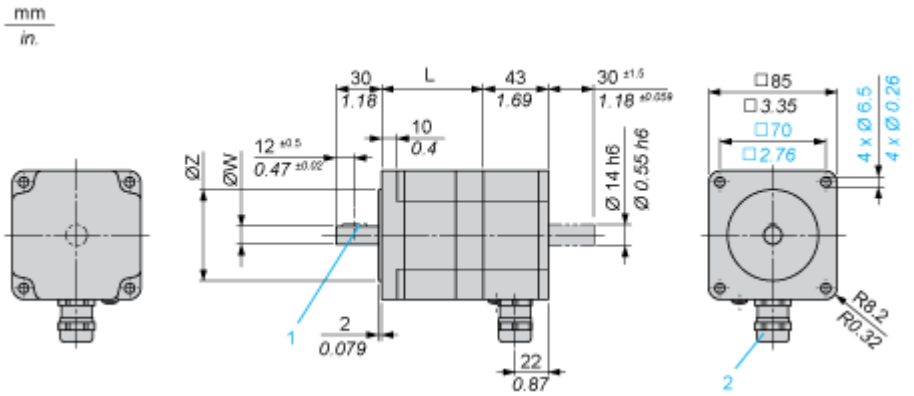

Dimensions in mm

L	Shaft diameter ØW	Centring collar ØZ	Woodruff key DIN 6888 (1)	Cable gland (2)
127.5 (+0.6) (-0.8)	14 h6	73 h8	5 x 6.5	ISO M20 x 1.5

Dimensions in in.

L	Shaft diameter ØW	Centring collar ØZ	Woodruff key DIN 6888 (1)	Cable gland (2)
5.02 (+0.023) (-0.031)	0.55 h6	2.87 h8	0.20 x 0.25	ISO M20 x 1.5

Performance Curves

Torque Characteristics

Measurement at 1000 Steps/Revolution, Nominal Voltage DC Bus U_N and Phase Current I_N

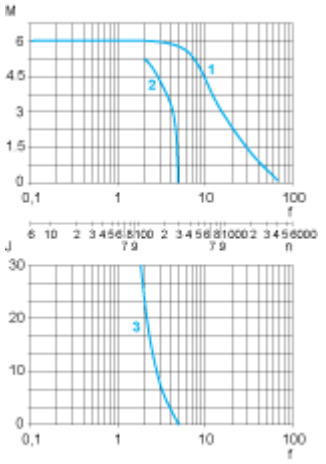

M : Torque in Nm

n : Speed in rpm

f : Frequency in kHz

J : Rotor inertia in $kg.cm^2$

1 : Pull-out torque

2 : Pull-in torque

3 : Maximum load inertia