Product data sheet

Specifications

discrete output module, Modicon TM3, 16 outputs transistor PNP, spring

TM3DQ16TG

Product availability: Stock - Normally stocked in distribution facility

Main

Range of Product	Modicon TM3
Product or Component Type	Discrete output module
Range Compatibility	Modicon M241 Modicon M251 Modicon M221 Modicon M262
Device Application	Industrial Application
Discrete output number	16
Discrete output logic	Positive logic (source)
Discrete output voltage	24 V DCtransistor

Complementary

Discrete output number	16 transistor
Discrete output current	500 mA transistor output
Response time on output	maximum (turn on) maximum (turn off)
Maximum leakage current	0.1 mA
Typical current consumption	5 mA 5 V DC 0 mA 24 V DC 20 mA 5 V DC 10 mA 24 V DC
Maximum cable distance between devices	Unshielded cable <98.4 ft (30 m) transistor output
Isolation between channels and bus	500 V AC
Local signalling	1 LED per channel (green) for output status
Housing Colour	Grey
Mounting support	Top hat type TH35-15 rail IEC 60715 Top hat type TH35-7.5 rail IEC 60715 plate or panel with fixing kit
Height	3.5 in (90 mm)
Width	1.08 in (27.4 mm)
Depth	3.3 in (84.6 mm)
Net Weight	0.24 lb(US) (0.11 kg)

Environment

IP Degree of Protection	IP20
Protective treatment	None

Price is “List Price” and may be subject to a trade discount – check with your local distributor or retailer for actual price.

Disclaimer: This documentation is not intended as a substitute for and is not to be used for determining suitability or reliability of these products for specific user applications

Marking	CE
Product certifications	CE CULus UKCA RCM EAC CULus HazLoc
Standards	IEC 61131-2
Operating altitude	0...6561.68 ft (0...2000 m)
Pollution degree	2
Shock resistance	15 gn 11 ms

Ordering and shipping details

Category	US10MSX22533
Discount Schedule	0MSX
GTIN	3606480611490
Returnability	Yes
Country of origin	TW

Packing Units

Unit Type of Package 1	PCE
Nbr. of units in pkg.	1
Package 1 Height	3.0 in (7.5 cm)
Package 1 Width	4.9 in (12.5 cm)
Package 1 Length	4.1 in (10.5 cm)
Package weight(Lbs)	8.6 oz (245.0 g)
Unit Type of Package 2	S04
Number of Units in Package 2	42
Package 2 Height	11.8 in (30 cm)
Package 2 Width	15.7 in (40 cm)
Package 2 Length	23.6 in (60 cm)
Package 2 Weight	24.853 lb(US) (11.273 kg)
Unit Type of Package 3	P12
Number of Units in Package 3	504
Package 3 Height	41.3 in (105 cm)
Package 3 Width	47.2 in (120 cm)
Package 3 Length	31.5 in (80 cm)
Package 3 Weight	273.4 lb(US) (124 kg)

Contractual warranty

Warranty (in months)	18

Environmental Data

Schneider Electric aims to achieve Net Zero status by 2050 through supply chain partnerships, lower impact materials, and circularity via our ongoing “Use Better, Use Longer, Use Again” campaign to extend product lifetimes and recyclability.

Environmental Data explained >

How we assess product sustainability >

Environmental footprint

Carbon footprint (kg CO2 eq, Total Life cycle)	34

Use Better

Materials and Substances

Packaging made with recycled cardboard	Yes
Packaging without single use plastic	Yes
EU RoHS Directive	Pro-active compliance (Product out of EU RoHS legal scope)
SCIP Number	7cc01735-94b8-432b-9a81-f9da4dd7709d
REACh Regulation	REACh Declaration
California proposition 65	WARNING: This product can expose you to chemicals including: Lead and lead compounds, which is known to the State of California to cause cancer and birth defects or other reproductive harm. For more information go to www.P65Warnings.ca.gov
PVC free	Yes

Use Again

Repack and remanufacture

Circularity Profile	End of Life Information
Take-back	No
WEEE Label	The product must be disposed on European Union markets following specific waste collection and never end up in rubbish bins.

Dimensions Drawings

Dimensions

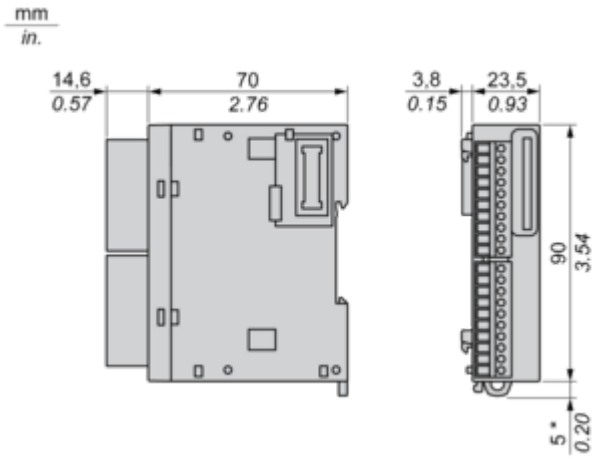

(*) 8.5 mm/0.33 in. when the clamp is pulled out.

Mounting and Clearance

Spacing Requirements

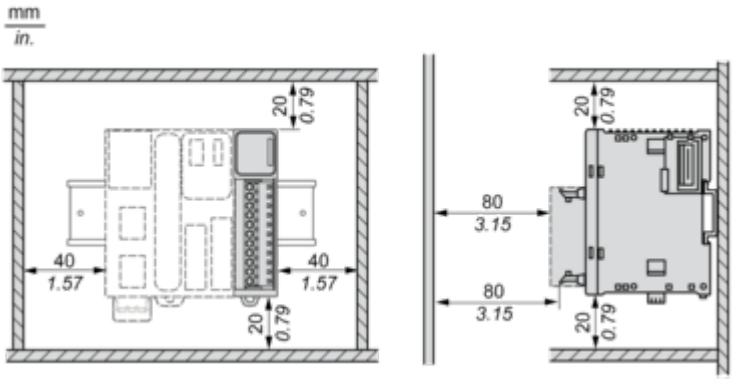

Mounting on a Rail

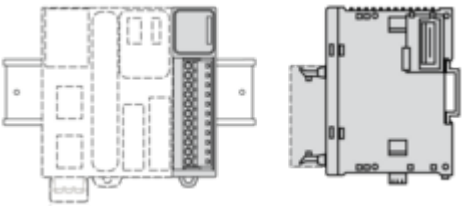

Incorrect Mounting

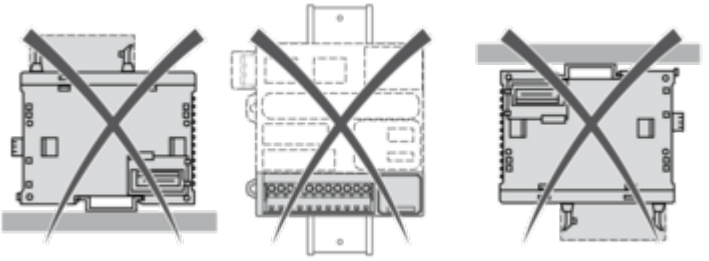

Mounting on a Panel Surface

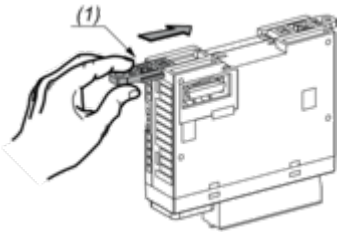

(1) Install a mounting strip

Mounting Hole Layout

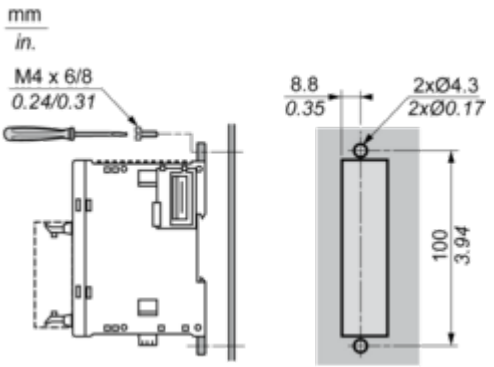

Connections and Schema

Digital Transistor Output Module (16-Channel, Source)

Wiring Diagram

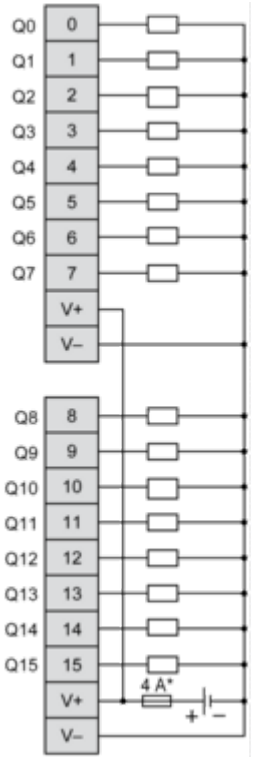

(*) Type T fuse