Product data sheet

Specifications

Remote transmitter module, Modicon TM5, communication between I/O IP20 and IP67

TM5SBET7

Product availability: Stock - Normally stocked in distribution facility

Main

Range of Product	Modicon TM5
Product or Component Type	Remote transmitter module
Product Specific Application	Communication between remote I/O

Complementary

Range Compatibility	Modicon M258 Modicon LMC058
Product Compatibility	Motion controller Logic controller
[Us] rated supply voltage	24 V DC - 15...20 %
Color	White
Bus length	8202.10 ft (2500 m)
Maximum cable distance between devices	328.08 ft (100 m)
Current consumption	25 mA 24 V DC input/output 100 mA 5 V DC bus
Maximum power dissipation in W	1.1 W
Local signalling	1 LED green power supply 1 LED red power supply 1 LED yellow communication data bus
Supply	Included for IP67 extension modules
Marking	CE
Net Weight	0.055 lb(US) (0.025 kg)

Environment

Standards	UL 508 CSA C22.2 No 142 IEC 61131-2 CSA C22.2 No 213
Product Certifications	CSA GOST-R cULus C-tick
Ambient air temperature for operation	32…122 °F (0…50 °C) vertical installation) 32…131 °F (0…55 °C) without derating horizontal installation) 32…140 °F (0…60 °C) with derating factor horizontal installation)
Ambient Air Temperature for Storage	-13…158 °F (-25…70 °C)
Relative Humidity	5…95 % without condensation

Price is “List Price” and may be subject to a trade discount – check with your local distributor or retailer for actual price.

Disclaimer: This documentation is not intended as a substitute for and is not to be used for determining suitability or reliability of these products for specific user applications

IP degree of protection	IP20IEC 61131-2 IP67
Pollution degree	2 IEC 60664
Operating altitude	0...6561.68 ft (0...2000 m)
Storage altitude	0…9842.5 ft (0…3000 m)
Vibration resistance	1 gn 8.4…150 Hz DIN rail 3.5 mm 5…8.4 Hz DIN rail
Shock resistance	15 gn 11 ms
Resistance to electrostatic discharge	4 kV on contact IEC 61000-4-2 8 kV in air IEC 61000-4-2
Resistance to electromagnetic fields	0.9 V/m (1 V/m) 2...2.7 GHz IEC 61000-4-3 9.1 V/m (10 V/m) 80...2000 MHz IEC 61000-4-3
Resistance to fast transients	1 kV IEC 61000-4-4 I/O) 1 kV IEC 61000-4-4 shielded cable) 2 kV IEC 61000-4-4 power lines)
Surge withstand	0.5 kV differential mode IEC 61000-4-5 1 kV common mode IEC 61000-4-5
Electromagnetic compatibility	EN/IEC 61000-4-6
Disturbance radiated/conducted	CISPR 11

Ordering and shipping details

Category	US1PC1222532
Discount Schedule	PC12
GTIN	3595864074894
Returnability	Yes
Country of origin	AT

Packing Units

Unit Type of Package 1	PCE
Nbr. of units in pkg.	1
Package 1 Height	0.787 in (2.000 cm)
Package 1 Width	2.362 in (6.000 cm)
Package 1 Length	4.134 in (10.500 cm)
Package weight(Lbs)	1.764 oz (50.000 g)
Unit Type of Package 2	S02
Number of Units in Package 2	97
Package 2 Height	5.906 in (15.000 cm)
Package 2 Width	11.811 in (30.000 cm)
Package 2 Length	15.748 in (40.000 cm)
Package 2 Weight	11.413 lb(US) (5.177 kg)

Contractual warranty

Warranty	18 months

Environmental Data

Schneider Electric aims to achieve Net Zero status by 2050 through supply chain partnerships, lower impact materials, and circularity via our ongoing “Use Better, Use Longer, Use Again” campaign to extend product lifetimes and recyclability.

Environmental Data explained

How we assess product sustainability

Environmental footprint

Environmental Disclosure	Product Environmental Profile

Use Better

Materials and Substances

Packaging made with recycled cardboard	No
Packaging without single use plastic	Yes
EU RoHS Directive	Pro-active compliance (Product out of EU RoHS legal scope)
REACh Regulation	REACh Declaration
California proposition 65	WARNING: This product can expose you to chemicals including: Lead and lead compounds, which is known to the State of California to cause cancer and birth defects or other reproductive harm. For more information go to www.P65Warnings.ca.gov
PVC free	Yes

Use Again

Repack and remanufacture

Circularity Profile	End of Life Information
Take-back	No
WEEE Label	The product must be disposed on European Union markets following specific waste collection and never end up in rubbish bins.

Dimensions Drawings

TM5 Slice

Dimensions

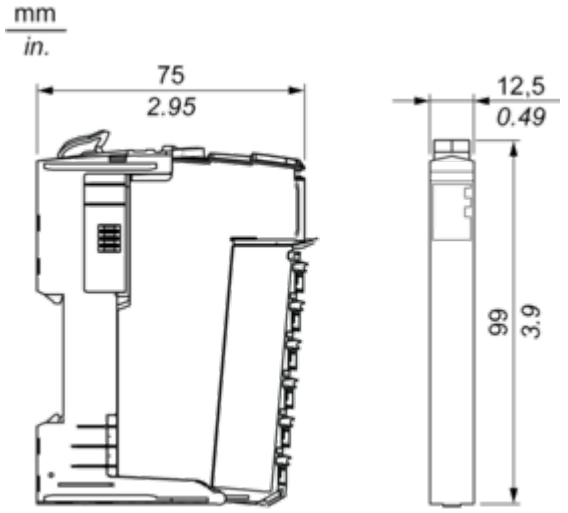

Mounting and Clearance

TM5 System

Spacing Requirements

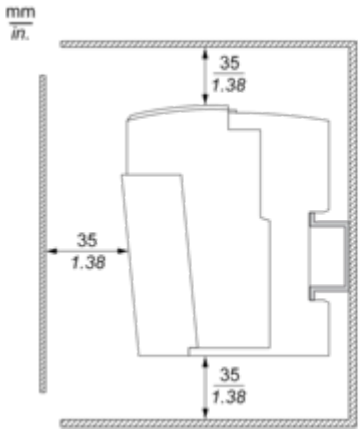

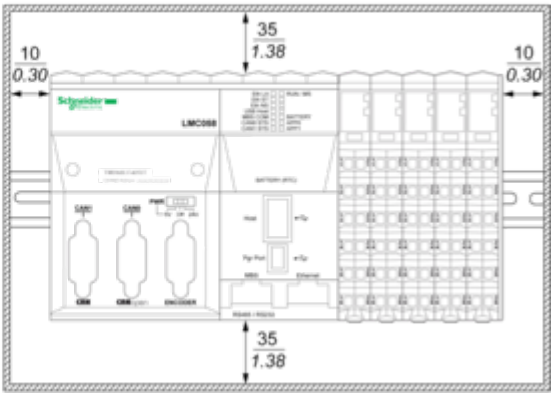

Mounting on a DIN Rail

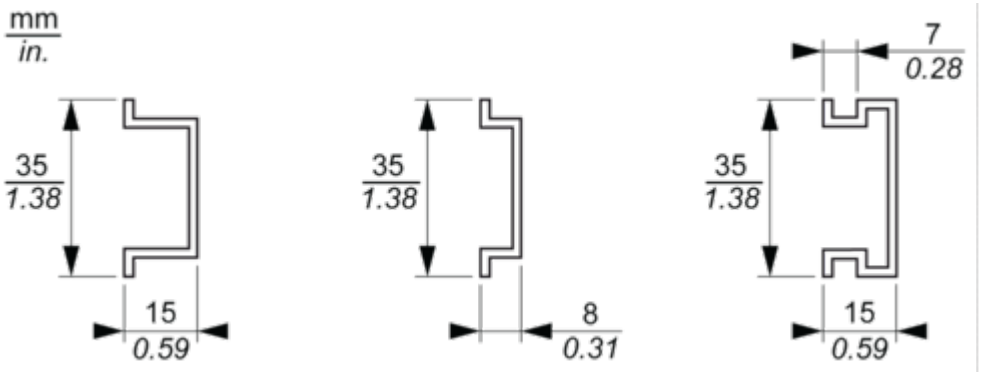

Connections and Schema

TM5 System Wiring Recommendations

Wire Sizes to Use with the Removable Spring Terminal Blocks

mm / in. 9 / 0.35				
mm²	0,08…2,5	0,25…2,5	0,25…1,5	2 x 0,25...2 x 0,75
AWG	28…14	24…14	24…16	2 x 24…2 x 18

Transmitter Electronic Module

Wiring Diagram

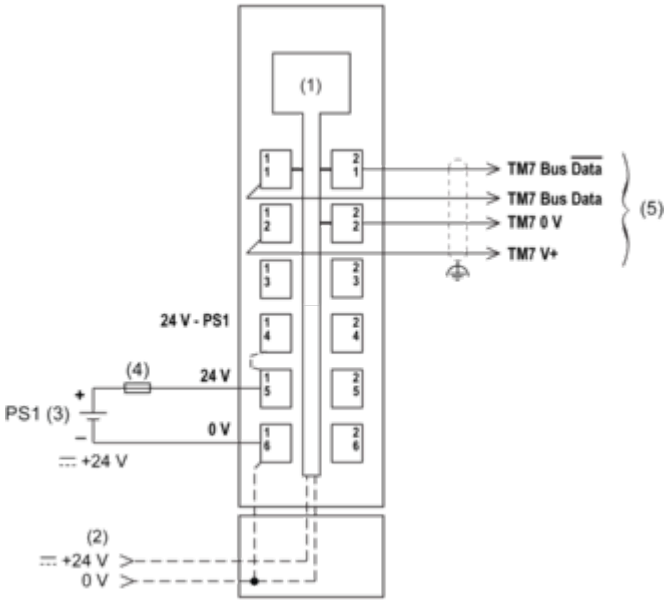

(1) Internal electronics
(2) 24 Vdc I/O power segment integrated into the bus bases
(3) PS1: External isolated power supply 24 Vdc
(4) External fuse, Type T slow-blow: 1 A max., 250 V
(5) TM7 Expansion bus cable (TCSXCN•FNX••E)