PowerLogic P3

Universal Relays P3U20 and P3U30

User Manual

10/2024

P3U/EN/M/30-208A
www.schneider-electric.com

Table of Contents

1 About this manual 12
1.1 Purpose 12
1.2 Related documents 12
1.3 Abbreviations and terms 13
1.4 Easergy to PowerLogic renaming 18
1.5 Description of the document versions 19
2 Product introduction 20
2.1 Warranty 20
2.2 Product overview 20
2.3 Product selection guide 21
2.4 Access to device configuration 29
2.4.1 User accounts 29
2.4.2 Logging on via the front panel 30
2.4.3 HTTP and FTP logon details 31
2.4.4 Password management 31
2.4.5 Password restoring 32
2.5 Front panel 32
2.5.1 Push-buttons 32
2.5.2 LED indicators 33
2.5.3 Controlling the alarm screen 34
2.5.4 Accessing operating levels 34
2.5.5 Adjusting the LCD contrast 34
2.5.6 Testing the LEDs and LCD screen 35
2.5.7 Controlling an object with selective control 35
2.5.8 Controlling an object with direct control 35
2.5.9 Menus 36
2.5.9.1 Moving in the menus 38
2.5.9.2 Local panel messages 38
2.6 eSetup Easergy Pro setting and configuration tool 39
2.7 Low-power instrument transformers 39
3 Measurement functions 41
3.1 Primary, secondary and per unit scaling 49
3.1.1 Frequency adaptation mode 53
3.1.2 Current scaling 54
3.1.3 Voltage scaling for analog module 56
3.1.4 Residual value scaling 59
3.2 Measurements for protection functions 61
3.3 RMS values 62
3.4 Harmonics and total harmonic distortion (THD) 62
3.5 Demand values 63
3.6 Minimum and maximum values 64

3.7 Maximum values of the last 31 days and 12 months....65
3.8 Memory management of measurements....68
3.9 Power and current direction....69
3.10 Symmetrical components....71

4 Control functions....72

4.1 Digital outputs....72
4.2 Digital inputs....74
4.3 Virtual inputs and outputs....78
4.4 Matrix....85
4.4.1 Output matrix....85
4.4.2 Blocking matrix....86
4.4.3 Object block matrix....87
4.4.4 Auto-recloser matrix....88
4.5 Releasing latches....88
4.5.1 Releasing latches using eSetup Easergy Pro....88
4.5.2 Releasing latches using buttons and local panel display....89
4.5.3 Releasing latches using F1 or F2 buttons....89
4.6 Controllable objects....90
4.6.1 Object control with digital inputs....91
4.6.2 Local or remote selection....92
4.6.3 Object control with I and O buttons....92
4.6.4 Object control with F1 and F2....93
4.6.5 Adjustable time delay mechanism for the object’s closing operation....94
4.7 Logic functions....95
4.8 Local panel....103
4.8.1 Mimic view....104
4.8.2 Local panel configuration....107

5 Protection functions....112

5.1 Current transformer requirements for overcurrent elements....112
5.1.1 CT requirements when settings are unknown....113
5.1.2 Principle for calculating the saturation current in class P....113
5.1.3 Examples of calculating the saturation current in class P....113
5.1.4 Principle for calculating the saturation current in class PX....114
5.1.5 Examples of calculating the saturation current in class PX....115
5.2 Maximum number of protection stages in one application....115
5.3 General features of protection stages....115
5.4 Application modes....123
5.5 Current protection function dependencies....123
5.6 Dependent operate time....123
5.6.1 Standard dependent delays using IEC, IEEE, IEEE2 and RI curves....126
5.6.2 Free parameterization using IEC, IEEE and IEEE2 curves....147
5.6.3 Programmable dependent time curves....148
5.7 Synchrocheck (ANSI 25)....152
5.8 Undervoltage (ANSI 27)....156
5.9 Directional power (ANSI 32L, ANSI 32R)....159

5.10 Phase undercurrent (ANSI 37)....160
5.11 Broken conductor (ANSI 46BC) 161
5.12 Negative sequence overcurrent (ANSI 46) 163
5.13 Incorrect phase sequence (ANSI 47) 166
5.14 Negative sequence overvoltage protection (ANSI 47).... 167
5.15 Motor start-up supervision (ANSI 48) 168
5.16 Thermal overload (ANSI 49 RMS).... 173
5.17 Breaker failure (ANSI 50BF).... 177
5.18 Breaker failure 1 and 2 (ANSI 50BF).... 179
5.19 Switch-on-to-fault (ANSI 50HS) 185
5.20 Phase overcurrent (ANSI 50/51)....187
5.21 Earth fault overcurrent (ANSI 50N/51N) 191
5.21.1 Earth fault faulty phase detection algorithm....195
5.22 Capacitor bank unbalance (ANSI 51C) 197
5.22.1 Taking unbalance protection into use.... 200
5.23 Locked rotor (ANSI 51LR)....204
5.24 Voltage-dependent overcurrent (ANSI 51V) 207
5.25 Overvoltage (ANSI 59)....210
5.26 Capacitor overvoltage (ANSI 59C) 213
5.27 Neutral voltage displacement (ANSI 59N).... 217
5.28 Restricted high-impedance earth fault (ANSI 64REF, 64BEF)....220
5.29 High-impedance busbar protection (ANSI 87 HiZ BB)....220
5.30 Motor restart inhibition (ANSI 66) 221
5.31 Directional phase overcurrent (ANSI 67) 223
5.32 Directional earth fault overcurrent (ANSI 67N).... 231
5.32.1 Earth fault faulty phase detection algorithm....237
5.33 Transient intermittent earth fault (ANSI 67NI)....238
5.34 Magnetizing inrush detection (ANSI 68F2).... 244
5.35 Fifth harmonic detection (ANSI 68H5).... 246
5.36 Vector shift (ANSI 78V)....246
5.37 Auto-recloser function (ANSI 79) 250
5.38 Overfrequency and underfrequency (ANSI 81) 255
5.39 Rate of change of frequency (ANSI 81R).... 258
5.40 Lockout (ANSI 86)....262
5.41 Programmable stages (ANSI 99)....264

6 Supporting functions.... 267

6.1 Event log....267
6.2 Disturbance recording....269
6.2.1 Configuring the disturbance recorder.... 274
6.3 Cold load start and magnetizing inrush....275
6.4 System clock and synchronization....277
6.5 Voltage sags and swells....284
6.6 Voltage interruptions.... 287
6.7 Current transformer supervision (ANSI 60)....290
6.8 Voltage transformer supervision (ANSI 60FL).... 292
6.9 Circuit breaker wear....295

6.10 Circuit breaker condition monitoring..... 301
6.11 Energy pulse outputs.....304
6.12 Active and reactive energy.....308
6.13 Running hour counter..... 309
6.14 Timers..... 310
6.15 Combined overcurrent status.....312
6.16 Incomer short-circuit fault locator.....316
6.17 Feeder fault locator (ANSI 21FL)..... 324
6.18 Trip circuit supervision (ANSI 74) 329
6.18.1 Trip circuit supervision with one digital input.....329
6.18.2 Trip circuit supervision with two digital inputs..... 335
6.18.3 Trip circuit supervision with two combined digital inputs.....338

7 Communication and protocols.....340

7.1 Cybersecurity..... 340
7.2 Communication ports..... 340
7.2.1 Remote and extension ports.....341
7.2.2 Ethernet port..... 341
7.2.3 Disabling the Ethernet communication..... 341
7.2.4 Disabling remote configuration..... 343
7.3 Storm protection.....345
7.4 Parallel Redundancy Protocol.....345
7.5 Communication protocols..... 346
7.5.1 Modbus RTU and Modbus TCP.....347
7.5.2 Profibus DP.....347
7.5.3 SPA-bus.....348
7.5.4 IEC 60870-5-103 (IEC-103).....348
7.5.5 DNP 3.0..... 349
7.5.6 IEC 60870-5-101 (IEC-101).....349
7.5.7 IEC 61850.....350
7.5.8 Ethernet/IP.....351
7.5.9 HTTP server – Webset..... 351
7.5.10 IEC 60870-5-104 (IEC-104).....351
7.6 IP filter.....351
7.6.1 Configuring the IP filter..... 352
7.6.2 Unexpected packets..... 354
7.6.3 Alarms.....355

8 Applications and configuration examples.....356

8.1 Substation feeder protection..... 356
8.2 Industrial feeder / motor protection..... 358
8.3 Using CSH120 and CSH200 with C = I_{01} 0.2 A core balance CT input..... 358
8.4 Using CSH120 and CSH200 with C = I_{01} CSH (2 / 20 A) core balance CT input..... 360

9 Installation..... 363

9.1 Safety in installation..... 363
9.2 Checking the consignment.....365

9.3 Product identification....365
9.4 Storage.... 366
9.5 Mounting.... 366
9.6 Connections....369
9.6.1 Rear panel.... 370
9.6.2 Auxiliary voltage....385
9.6.3 Local port....386
9.6.4 Connection data....387
9.6.5 External option modules.... 394
9.6.5.1 VSE-001 fiber-optic interface module....394
9.6.5.2 VSE-002 RS-485 interface module.... 396
9.6.5.3 VPA-3CG Profibus interface module.... 397
9.6.5.4 VIO 12A RTD and analog input / output modules.... 398
9.6.6 Block diagrams.... 398
9.6.7 Connection examples.... 409
9.6.8 Low-power instrument transformers.... 421
9.6.8.1 Connections – rear panel.... 422
9.6.9 LPVT hub connector (reference EMS59573)....424
9.6.10 Voltage adapter....425
9.6.10.1 Mounting the voltage adapter....428
9.6.10.2 RJ45 terminal locking....429
9.6.10.3 Voltage adapter parameters....430
9.6.11 RJ45 LPCT/LPVT plug (VW3A8306RC)....431
9.7 LPCT configuration.... 432
9.7.1 Introduction 432
9.7.2 Benefits of LPCTs.... 432
9.7.3 LPCT characteristics....434
9.7.4 LPCT input characteristics....435
9.7.5 LPCT configuration procedure....436
9.8 LPVT configuration.... 439
9.8.1 Introduction 439
9.8.2 Benefits of LPVTs.... 439
9.8.3 LPVT characteristics....440
9.8.4 LPVT input characteristics....442
9.8.5 LPVT configuration procedure....442
9.9 LPVT configuration with VT adapter.... 444
9.9.1 Introduction 444
9.9.2 Benefits of VT adapter....444
9.9.3 EMS59572 adapter characteristics....444
9.9.4 LPVT input characteristics....445
9.9.5 EMS59572 VT adapter configuration....446
9.10 LPVT voltage sharing application.... 446
9.11 Low-power instrument transformer testing....449
9.11.1 Testing tools and equipment.... 449
9.11.2 Testing the low-power current transformer measurements....450
9.11.3 Testing the low-power voltage transformer measurements....450

9.12 Testing with LPIT test box (reference REL51037)..... 451
9.12.1 Introduction.....451
9.12.2 LPCT/LPVT testing diagram.....453
9.12.3 Current injection test.....454
9.12.4 Voltage injection test.....456
9.12.5 Current and voltage injections test..... 456
9.12.6 Test input (20th RJ45)..... 456
9.12.7 LPCT/LPVT Test Sockets and Plugs ESSAILEC®.....457
9.12.8 Order codes for LPCT/LPVT accessories.....458
9.13 Voltage measurement modes..... 459
9.13.1 Multiple channel voltage measurement – LPVT..... 467
9.14 CSH120 and CSH200 Core balance CTs..... 470

10 Test and environmental conditions.....475

10.1 Disturbance tests..... 475
10.2 Electrical safety tests..... 476
10.3 Mechanical tests..... 477
10.4 Environmental tests..... 477
10.5 Environmental conditions.....478
10.6 Casing.....479

11 Maintenance.....480

11.1 Preventive maintenance.....480
11.2 Periodic testing.....481
11.3 Hardware cleaning..... 481
11.4 System status messages..... 481
11.5 Spare parts.....481
11.6 Self-supervision.....481
11.6.1 Diagnostics.....482

12 Order codes and accessories..... 484

12.1 Order codes..... 484
12.2 Accessories.....485

13 Firmware revision.....487

Legal information

The Schneider Electric brand and any registered trademarks of Schneider Electric Industries SAS referred to in this guide are the sole property of Schneider Electric SA and its subsidiaries. They may not be used for any purpose without the owner's permission, given in writing. This guide and its content are protected, within the meaning of the French intellectual property code (Code de la propriété intellectuelle français, referred to hereafter as "the Code"), under the laws of copyright covering texts, drawings and models, as well as by trademark law. You agree not to reproduce, other than for your own personal, noncommercial use as defined in the Code, all or part of this guide on any medium whatsoever without Schneider Electric's permission, given in writing. You also agree not to establish any hypertext links to this guide or its content. Schneider Electric does not grant any right or license for the personal and noncommercial use of the guide or its content, except for a non-exclusive license to consult it on an "as is" basis, at your own risk. All other rights are reserved.

Electrical equipment should be installed, operated, serviced and maintained only by qualified personnel. No responsibility is assumed by Schneider Electric for any consequences arising out of the use of this material.

As standards, specifications and designs change from time to time, please ask for confirmation of the information given in this publication.

Safety information

Important information

Read these instructions carefully and look at the equipment to become familiar with the device before trying to install, operate, service or maintain it.

The following special messages may appear throughout this publication or on the equipment to warn of potential hazards or to call attention to information that clarifies or simplifies a procedure.

This is the safety alert symbol. It is used to alert you to potential personal injury hazards. Obey all safety messages that follow this symbol to avoid possible injury or death.

The addition of either symbol to a “Danger” or “Warning” safety label indicates that an electrical hazard exists which will result in personal injury if the instructions are not followed.

DANGER

DANGER indicates a hazardous situation which, if not avoided, **will result in** death or serious injury.

WARNING

WARNING indicates a hazardous situation which, if not avoided, **could result in** death or serious injury.

CAUTION

CAUTION indicates a hazardous situation which, if not avoided, **could result in** minor or moderate injury.

NOTICE

NOTICE is used to address practices not related to physical injury.

Please note

Electrical equipment must only be installed, operated, serviced, and maintained by qualified personnel. A qualified person is one who has skills and knowledge related to the construction, installation, and operation of electrical equipment and has received safety training to recognize and avoid the hazards involved.

No responsibility is assumed by Schneider Electric for any consequences arising out of the use of this material.

Protective grounding

The user is responsible for compliance with all the existing international and national electrical codes concerning protective grounding of any device.

EU directive and UKCA regulations compliance

EU directive compliance

UKCA regulations compliance

Schneider Electric Limited
Stafford Park 5
Telford, TF3 3BL
United Kingdom

EMC compliance

2014/30/EU

Compliance with the European Commission's EMC Directive. Product Specific Standard was used to establish conformity:

- EN 60255-26 2013

EMC compliance

SI 2016 No. 1091

The Electromagnetic Compatibility Regulations:

- BS EN 60255-26 2013

Product safety

2014/35/EU

Compliance with the European Commission's Low Voltage Directive. Product Specific Safety Standard was used to establish conformity:

- EN 60255-27 2014

Product safety

SI 2016 No. 1101

The Electrical Equipment (Safety) Regulations:

- BS EN 60255-27 2014

RoHS directive

2011/65/EU (inclusive of Directive (EU) 2015/863) Compliance

Compliance with the European Commission's on the restriction of the use of certain hazardous substances in electrical and electronic equipment

- EN IEC 63000:2018 / IEC 63000:2016

RoHS regulation

SI 2012 No. 3032

The Restriction of the Use of Certain Hazardous Substances in Electrical and Electronic Equipment Regulations

- BS EN IEC 63000:2018

1 About this manual

1.1 Purpose

This document contains instructions on the installation, commissioning and operation of PowerLogic P3U20 and P3U30.

This document is intended for persons who are experts on electrical power engineering, and it covers the relay models as described by the order code in *12.1 Order codes*.

1.2 Related documents

Table 1 - Related documents

Document	Identification[1)]
PowerLogic P3 Universal Relay P3U Quick Start	P3U/EN QS/xxxx
eSetup Easergy Pro Setting and Configuration Tool User Manual	P3eSetup/EN M/xxxx
RTD and mA Output/Input Modules User Manual	VVIO12A_EN_M_D002
Profibus Interface Module User Manual	VVPA3CG_EN_M_D004
IEC 61850 configuration instructions	P3APS19001EN
Rapid Spanning Tree Protocol (RSTP)	P3APS17002EN
EtherNet/IP configuration instructions	P3APS17003EN
Parallel Redundancy Protocol for Easergy P3 relays with dual-port 100 Mbps Ethernet interface	P3APS17004EN
Communication parameter protocol mappings	P3TDS17005EN
Easergy P3 protection functions' parameters and recorded values	P3TDS17006EN
IEC103 Interoperability List	P3TDS17009EN
DNP 3.0 Device Profile Document	P3TDS17010EN
P3 Standard Series facia label instruction	P3TDS17011EN
Restricted earth fault protection using an I0 input of an Easergy P3 relay	P3APS17016EN

[1)] xxxx = revision number

1.3 Abbreviations and terms

Table 2 - Abbreviations and terms used in this manual

AC	Alternating current
AFD	Arc flash detection
ANSI	American National Standards Institute A standardization organization
bps	Bits per second
CB	Circuit breaker
CBFP	Circuit breaker failure protection
CLPU	Cold load pickup
CM	Common mode
Controlling output	Heavy duty output rated for the circuit breaker controlling
CPU	Central processing unit
cosφ	Active power divided by apparent power = P/S (See power factor PF.) Negative sign indicates reverse power.
CT	Current transformer
CT primary	CT_{PRI}. Nominal primary value of the IL (high-voltage) current transformer
CT' primary	CT'_{PRI}. Nominal primary value of the I'L (low-voltage) current transformer
CT secondary	CT_{SEC}. Nominal secondary value of the IL (high-voltage) current transformer
CT' secondary	CT_{SEC}. Nominal secondary value of the I'L (low-voltage) current transformer
DC	Direct current
Dead band	See hysteresis.
DI	Digital input
Digital output	Relay's output contact
DM	Differential mode
DMS	Distribution management system

DO	Digital output
Document file	Stores information about the relay settings, events and fault logs
DSR	Data set ready An RS232 signal. Input in front panel port of PowerLogic P3 devices to disable rear panel local port.
DST	Daylight saving time Adjusting the official local time forward by one hour for summer time.
DT	Definite time
DTR	Data terminal ready An RS232 signal. Output and always true (+8 Vdc) in front panel port of PowerLogic P3 relays.
eSetup Easergy Pro	Setting and configuration tool for PowerLogic P3 protection relays
ETAR T>	This measurement indicates the time to allow a restart coming from the T> stage (49F, 49M, 49G, 49T)
Eth packets per second limit	Use this to set the maximum transmitted packet limit in each second by the PowerLogic P3 device. The recommended setting is 75.
Event	A single occurrence in a power system process. In the HMI, event is abbreviated as “E” followed by an identification number. For example, E15 refers to Event 15.
F2BIO	2 x optical BIO interfaces, fibre
fy	Frequency on the other side of the breaker. This measurement is available when the voltage scaling mode has synchrocheck configured.
GOOSE	Generic object-oriented substation event A specific definition of a type of generic substation event, for peer-peer communication.
Hysteresis	I.e. dead band Used to avoid oscillation when comparing two nearby values.

IDMT	Inverse definite minimum time
I_{MODE}	Nominal current of the selected mode In feeder mode, I_{MODE}= $VT_{PRIMARY}$. In motor mode, I_{MODE}= I_{MOT}.
I_{MOT}	Nominal current of the protected motor
I_N	Nominal current Rating of CT primary or secondary
I_{SET}	Start setting value I> (50/51)
I_{0N}	Nominal current of I_0 input in general
$I_{0\ SET}$	Start setting value I_0>
IEC	International Electrotechnical Commission An international standardization organisation
IEC-101	Communication protocol defined in standard IEC 60870-5-101
IEC-103	Communication protocol defined in standard IEC 60870-5-103
IEEE	Institute of Electrical and Electronics Engineers
IRIG-B	Inter-Range Instrumentation Group time code B Standard for time transfer
IT	Instrument transformer (current or voltage transformer): electrical device used to isolate or transform voltage or current levels
LAN	Local area network Ethernet-based network for computers and devices
Latching	Digital outputs and indication LEDs can be latched, which means that they are not released when the control signal is releasing. Releasing of latched devices is done with a separate action.
LCD	Liquid crystal display
LED	Light-emitting diode
LPCT	Low-power current transformer

LPIT	Low-power instrument transformer (LPCT or LPVT)
LPVT	Low-power voltage transformer
NTP	Network Time Protocol for LAN and WWW
Operation delay	A setting in eSetup Easergy Pro that specifies the total operate time from the fault occurrence until the output contacts are operated. The delay contains: • start delay • user-configurable operation delay • output contact delay
OVF	Indication of the event overflow
P	Active power Unit = [W]
PF	Power factor The absolute value is equal to cosφ, but the sign is 'IND' for inductive i.e. lagging current and 'CAP' for capacitive i.e. leading current.
PLC	Programmable logic controller
P_M	Nominal power of the prime mover (Used by reverse/under power protection.)
POC signals	Binary signals that are transferred in the communication channel of two P3L30 line differential relays in both directions. POC signals are used to transfer statuses of the DI, VI, VO and logic outputs.
PowerLogic P3 Standard	P3U20 and P3U30 relays
PowerLogic P3 Advanced	P3F30, P3L30, P3M30/32, P3G30/32 and P3T32 relays
pu PU	Per unit Depending of the context, the per unit refers to any nominal value. For example, for overcurrent setting 1 pu = 1 x I_N .For example, for overcurrent setting 1 pu = 1 x I_{MOT} .
P3U	P3U20 and P3U30 protection relay
Q	Reactive power Unit = [var]

RELxxxxx	Short order code
RH	Relative humidity
RMS	Root mean square
RS232 or RS485 (EIA-232 or EIA-485)	Standard defining the electrical characteristics of a serial communication interface
RTU	Remote terminal unit
S	Apparent power Unit = [VA]
SCADA	Supervisory control and data acquisition
SF	Alarm duty watchdog output is energized when the auxiliary power supply is on and the product status is operative. This output is referenced as "service status output" in the setting tool.
Signaling output	Alarm duty output rated, not suitable for direct circuit breaker controlling
SNTP	Simple Network Time Protocol for LAN and WWW
SOTF	Switch on to fault
Squelch limit	Noise filter used to force the measured low signal level to zero
SPST	Single pole single throw
SPDT	Single pole double throw
Storm protection limit	Use this setting to limit broadcast messages. For example, limit the storm to 3%, that is 0.03 * 100 Mbps = 30 kbps. This means that only 30 kb (typically 45 packets) of broadcast traffic per second is processed by the PowerLogic P3 device.
TCP keepalive interval	Interval between keepalive messages. Keepalive messages are used to keep the connection active and to response faster to a lost connection.
TCS	Trip circuit supervision
THD	Total harmonic distortion

U_{0SEC}	Voltage at input U_c at zero ohm ground fault. (Used in voltage measurement mode “2LL+U_0”)
U_A	Voltage input for U_{12} or U_{L1} depending on the voltage measurement mode
U_B	Voltage input for U_{23} or U_{L2} depending on the voltage measurement mode
U_C	Voltage input for U_{31} or U_0 depending on the voltage measurement mode
U_N	Nominal voltage Rating of VT primary or secondary
UMI	User-machine interface
USB	Universal serial bus
UTC	Coordinated Universal Time Used to be called GMT = Greenwich Mean Time
Webset	HTTP configuration interface
VI	Virtual input
VO	Virtual output
VT	Voltage transformer
VT_{PRI}	Nominal primary value of voltage transformer
VT_{SEC}	Nominal secondary value of voltage transformer

1.4 Easergy to PowerLogic renaming

Schneider Electric, driven by its “Customer First” Core Value, is fully committed to easing the customer experience with our portfolio on all fronts. With this core mission in mind, the decision to optimize the number of brands has been taken across the entire digital Schneider Electric portfolio to provide a more cohesive and consistent presentation of our offers across different Divisions, bringing a simpler and customer-centric approach that will facilitate the navigation through all the breadth and depth of our offers and that will be a key enabler for an optimized digitization experience.

This brand optimization initiative affects Protection & Control portfolio including Easergy P3 protection and control relays. The Easergy P3 has been renamed to PowerLogic P3. It is essential to emphasize that this renaming exclusively affects the brand name of the products and will have absolutely no consequence on the

current performance, specifications, characteristics, and/or quality of the product, which remain totally unaffected by this brand name migration. During the brand transition project, it may happen that the application of this change to different parts of the offer becomes effective with different time schedules. There is absolutely no difference between Easergy and PowerLogic branded P3 products and accessories. Easergy accessories can be used with PowerLogic P3 product as long as the commercial reference is matching. The commercial references have not changed along with the renaming of the offer. eSetup Easergy Pro and CET850 remain the software to configure PowerLogic P3 protection and control relays.

1.5 Description of the document versions

The document version rule was upgraded since the firmware version 30.208 to help understand for which firmware version the user manual is intended.

The document version is composed of the following information:

- Product type
  - P3U stands for PowerLogic P3 Standard; P3X stands for PowerLogic P3 Advanced;
  - P3F stands for PowerLogic P3 Feeder;
  - P3G stands for PowerLogic P3 Generator;
  - P3L stands for PowerLogic P3 Line differential;
  - P3M stands for PowerLogic P3 Motor;
  - P3T stands for PowerLogic P3 Transformer.
- Language and standard definition
  - EN, FR, IT, ES, PT, RU, CN, ANSI, and so on.
  - By default, the IEC standard applies. ANSI version is always published in the English language.
- Document type
  - M stands for User Manual, QS stands for Quick Start Manual, C stands for Communication Manual.
- Major version of the firmware
- Release version of the firmware
- Document version, which loops from A to Z for a dedicated release version.

2 Product introduction

2.1 Warranty

This product has a standard warranty of 2 years.

Ask your local Schneider Electric representative about our optional 10-year warranty. Local conditions and availability apply.

2.2 Product overview

The relay communicates with other systems using common protocols, such as the Modbus RTU, ModbusTCP, IEC 60870-5-103, IEC 60870-5-101, IEC 61850, SPA bus, and DNP 3.0.

User interface

The relay can be controlled in three ways:

- Locally with the push-buttons on the relay front panel
- Locally using a PC connected to the USB port on the front
- Via remote control over the optional remote control port on the relay rear panel.

PowerLogic P3U20 and P3U30 include all the essential protection functions needed to protect feeders and motors in distribution networks of utilities, industry and power plants for all level of voltage below 132 kV. Further, the relay includes several programmable functions, such as trip circuit supervision and circuit breaker protection and communication protocols for various protection and communication situations.

Protection functions

- Universal, adaptive protection functions for user-configurable applications like feeder, motor, and voltage protection from basic non-directional to directional overcurrent protection, thermal overload, and auto-recloser
- Neutral voltage displacement, overvoltage and frequency protection including synchrocheck for two breakers
- Single-line diagram, measurements and alarms in the user-machine interface (UMI)
- User-configurable interlocking for primary object control
- Optional arc flash detection utilizing point sensors and a fiber loop that can provide system wide arc flash detection.

Virtual injection

- Current and voltage injection by manipulating the database of the product by setting tool disturbance recorder file playback through the product's database

Robust hardware

- User-selectable Ethernet, RS485 or RS232 -based communication interfaces
- Designed for demanding industrial conditions with conformal-coated printed circuit boards
- Standard USB connection (type B) for Easergy P3 setting software

Common technology for cost efficiency

- Powerful CPU supporting IEC 61850
- Thanks to four setting groups, adaptation to various protection schemes is convenient

User-machine interface (UMI)

- Clear LCD display for alarms and events
- Single-line diagram mimic with control, indication and live measurements
- Programmable function keys and LEDs
- Circuit breaker ON/OFF control
- Common firmware platform with other PowerLogic P3 range protection relays

2.3 Product selection guide

The selection guide provides information on the PowerLogic P3 platform to aid in the relay selection. It suggests PowerLogic P3 types suitable for your protection requirements, based on your application characteristics. The most typical applications are presented along with the associated PowerLogic P3 type.

Table 3 - Applications

	PowerLogic P3 Standard		PowerLogic P3 Advanced	
			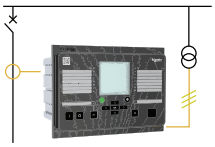	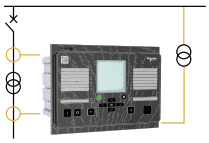
Voltage	–	P3U30 with directional o/c with voltage protection		–
Feeder	P3U20		P3F30 w. directional P3L30 w. line diff.	–
Transformer			–	P3T32 with differential
Motor			P3M30	P3M32 with differential
Generator			P3G30	P3G32 with differential

		PowerLogic P3 Standard		PowerLogic P3 Advanced	
Measuring inputs	Phase current	1/5A CT (x3)	1/5A CT (x3) or LPCT (x3)	1/5A CT (x3) or LPCT (x3)[2]	1/5A CT (x6)
	Residual current	1/5A CT or 0.2/1A CT or CSH		5/1A+1/0.2A or or 5/1A + CSH	5/1A+1/0.2A + 5/1A+1/0.2A CT
	Voltage	VT (x1)	VT (x4) or LPVT (x4)	VT (x4) or LPVT (x4)[2]	VT (x4)
Arc flash sensor input		–		0 to 4 point sensor	0 to 4 point sensor
Digital I/O	Input	8/10	14/16	6 to 36	6 to 16
	Output	5/8 + SF	11/8 + SF	10 to 21 + SF	10 to 13 + SF
Analog I/O	Input	0 or 4 [3]		0 or 4 [3]	
	Output	0 or 4 [3]		0 or 4 [3]	
Temperature sensor input		0 or 8 or 12[3]		0 or 8 or 12[3]	
Front port		USB		USB	
Nominal power supply		24 Vdc or 24...48 Vdc (20...57 Vdc) or 48...240 Vdc/ac (39...265 V dc/ac)[4]		24...48 Vdc (20...57 Vdc) or 110...240 Vdc/ac (88...265 V dc/ac)	
Ambient temperature, in service		-40...60°C (-40...140°F)		-40...60°C (-40...140°F)	

[2] LPCT/LPVT available for P3F30 and P3M30 only
[3] Using external RTD module
[4] Check the available power supply range from the device's serial number label.

Table 4 - Communication & others

		PowerLogic P3 Standard	PowerLogic P3 Advanced	
		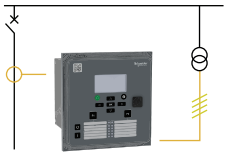	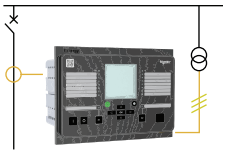	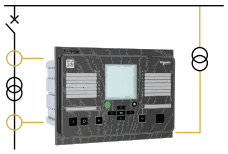
Communication				
Rear ports	RS-232	■	■	■
	IRIG/B	■	■	■
	RS-485	■	Using external I/O module	Using external I/O module
	Ethernet	■	■	■
Protocols	IEC 61850 Ed1 & Ed2	■	■	■
	IEC 60870-5-101	■	■	■
	IEC 60870-5-103	■	■	■
	IEC 60870-5-104	■	■	■
	DNP3 Over Ethernet	■	■	■

		PowerLogic P3 Standard	PowerLogic P3 Advanced	
	Modbus serial	■	■	■
	Modbus TCP/IP	■	■	■
	Ethernet/IP	■	■	■
	Profibus DP	■	■	■
	SPAbus	■	■	■
Redundancy protocols	RSTP	■	■	■
	PRP	■	■	■
Others				
Control		8 objects Mimic	8 objects Mimic	
Logic	Matrix	■	■	
	Logic equations	■	■	
Cyber security		Password	Password	
Withdrawability (Pluggable connector)		■	–	
Remote UMI		–	■	

NOTE: The numbers in the following tables represent the amount of stages available for each PowerLogic P3 type.

Table 5 - Protection functions for P3U

Protection functions	ANSI code	Feeder P3U20	Feeder P3U30	Motor P3U20	Motor P3U30
Fault locator	21FL	–	1	–	1
Synchronization check[5)]	25	–	2	–	2
Undervoltage	27	–	3	–	3
Directional power	32L, 32R	–	2	–	2
Phase undercurrent	37	1	1	1	1
Temperature monitoring[6)]	38/49T	12	12	12	12
Negative sequence overcurrent (motor, generator)	46	–	–	2	2
Cur. unbalance, broken conductor	46BC	1	1	–	–
Incorrect phase sequence	47	–	–	1	1
Negative sequence overvoltage protection	47	–	3	–	3

Protection functions	ANSI code	Feeder P3U20	Feeder P3U30	Motor P3U20	Motor P3U30
Motor start-up supervision / Locked rotor	48/51LR	–	–	1	1
Thermal overload	49	1	1	1	1
Phase overcurrent	50/51	3	3	3	3
Earth fault overcurrent	50N/51N	5	5	5	5
Breaker failure	50BF	1	1	1	1
SOTF	50HS	1	1	1	1
Capacitor bank unbalance[7)]	51C	2	2	2	2
Voltage-dependent overcurrent	51V	–	1	–	1
Overvoltage	59	–	3	–	3
Capacitor overvoltage	59C	1	1	–	–
Neutral voltage displacement	59N	3	3	3	3
CT supervision	60	1	1	1	1
VT supervision	60FL	–	1	–	1
Restricted earth fault with external connection (high impedance)	64REF 64BEF	1	1	1	1
Frequent start inhibition	66	–	–	1	1
Directional phase overcurrent	67	–	4	–	4
Directional earth fault o/c	67N	5	5	5	5
Transient intermittent	67NI	1	1	–	–
Magnetizing inrush detection	68F2	1	1	1	1
Fifth harmonic detection	68H5	1	1	1	1
Vector shift	78V	–	1	–	1
Auto-Recloser	79	5	5	–	–
Over or under frequency	81	–	2/2	–	2/2
Rate of change of frequency	81R	–	1	–	1
Under frequency	81U	–	2	–	2
Lockout	86	1	1	1	1

Protection functions	ANSI code	Feeder P3U20	Feeder P3U30	Motor P3U20	Motor P3U30
High-impedance busbar	87HiZ BB	1	1	1	1
Programmable stages	99	8	8	8	8
Cold load pickup (CLPU)	–	1	1	1	1
Programmable curves	–	3	3	3	3
Setting groups [8)]	–	4	4	4	4

[5)] The availability depends on the selected voltage measurement mode (in the **Scaling** setting view in eSetup Easergy Pro)
[6)] Using external RTD module
[7)] Capacitor bank unbalance protection is connected to the earth fault overcurrent input and shares two stages with the earth fault overcurrent protection.
[8)] Not all protection functions have 4 setting groups. See details in the manual.

Table 6 - Protection functions for Px3x

Protection functions	ANSI code	P3F30	P3L30	P3M30	P3M32	P3G30	P3G32	P3T32
Under-impedance	21G	–	–	–	–	2	2	–
Fault locator	21FL	1	1	–	–	–	–	–
Overfluxing	24	–	–	–	–	1	1	1
Synchronization check[9)]	25	2	2	2	2	2	2	2
Undervoltage	27	3	3	3	3	3	3	3
Positive sequence under-voltage	27P	–	–	–	–	2	2	2
Directional power	32L, 32R	2	2	2	2	2	2	–
Phase undercurrent	37	–	–	1	1	–	–	–
Temperature monitoring[10)]	38/49T	12	12	12	12	12	12	12
Loss of field	40	–	–	–	–	1	1	–
Under-reactance	21/40	–	–	–	–	2	2	–
Negative sequence overcurrent (motor, generator)	46	–	–	2	2	2	2	2
Cur. unbalance, broken conductor	46BC	1	1	–	–	–	–	–
Incorrect phase sequence	47	–	–	1	1	–	–	–
Negative sequence overvoltage protection	47	3	3	3	3	3	3	3
Excessive start time, locked rotor	48/51LR	–	–	1	1	–	–	–
Thermal overload	49	1	1	1	1	1	1	1
Phase overcurrent	50/51	3	3	3	3	3	3	3

Protection functions	ANSI code	P3F30	P3L30	P3M30	P3M32	P3G30	P3G32	P3T32
Earth fault overcurrent	50N/51N	5	5	5	5	5	5	5
Breaker failure	50BF	1	1	1	1	1	1	1
SOTF	50HS	1	1	1	1	1	1	1
Capacitor bank unbalance[11)]	51C	2	2	2	2	2	2	2
Voltage-dependent overcurrent	51V	1	1	–	–	1	1	–
Overvoltage	59	3	3	3	3	3	3	3
Capacitor overvoltage	59C	1	1	–	–	–	–	–
Neutral voltage displacement	59N	2	2	2	2	2	2	2
CT supervision	60	1	1	1	1	1	2	2
VT supervision	60FL	1	1	1	1	1	1	1
Restricted earth fault with external connection (high impedance)	64REF 64BEF	1	1	1	1	1	1	1
Restricted earth fault (low impedance)	64REF	–	–	–	1	–	1	1
Stator earth fault	64S	–	–	–	–	1	1	–
Frequent start inhibition	66	–	–	1	1	–	–	–
Directional phase overcurrent	67	4	4	4	4	4	4	4
Directional earth fault o/c	67N	5	5	5	5	5	5	5
Transient intermittent	67NI	1	1	–	–	–	–	–
Magnetizing inrush detection	68F2	1	1	1	1	1	1	1
Fifth harmonic detection	68H5	1	1	1	1	1	1	1
Pole slip	78PS	–	–	–	–	1	1	–
Auto-Recloser	79	5	5	–	–	–	–	–
Over or under frequency	81	2/2	2/2	2/2	2/2	2/2	2/2	2/2
Rate of change of frequency	81R	1	1	1	1	1	1	1
Under frequency	81U	2	2	2	2	2	2	2
Lockout	86	1	1	1	1	1	1	1
Line differential	87L	–	2	–	–	–	–	–

Protection functions	ANSI code	P3F30	P3L30	P3M30	P3M32	P3G30	P3G32	P3T32
Machine differential	87M	–	–	–	2	–	2	–
Transformer differential	87T	–	–	–	–	–	–	2
High-impedance busbar	87HiZ BB	1	1	1	–	1	–	–
Programmable stages	99	8	8	8	8	8	8	8
Arc flash detection (AFD)	–	8	8	8	8	8	8	8
Cold load pickup (CLPU)	–	1	1	1	1	1	1	1
Programmable curves	–	3	3	3	3	3	3	3
Setting groups [12)]	–	4	4	4	4	4	4	4

[9)] The availability depends on the selected voltage measurement mode (in the **Scaling** setting view in eSetup Easergy Pro)
[10)] Using external RTD module
[11)] Capacitor bank unbalance protection is connected to the earth fault overcurrent input and shares two stages with the earth fault overcurrent protection.
[12)] Not all protection functions have 4 setting groups. See details in the manual.

Table 7 - Control functions

Control functions	P3U20	P3U30	P3F30	P3L30	P3M30	P3M32	P3G30	P3G32	P3T32
Switchgear control and monitoring	2	4	6	6	6	6	6	6	6
Switchgear monitoring only	–	–	2	2	2	2	2	2	2
Programmable switchgear interlocking	■	■	■	■	■	■	■	■	■
Local control on single-line diagram	■	■	■	■	■	■	■	■	■
Local control with O/I keys	■	■	■	■	■	■	■	■	■
Local/remote function	■	■	■	■	■	■	■	■	■
Function keys	2	2	2	2	2	2	2	2	2
Custom logic (logic equations)	■	■	■	■	■	■	■	■	■
Control with Smart App	■	■	■	■	■	■	■	■	■

Table 8 - Measurements

Measurement	P3U20	P3U30	P3F30	P3L30	P3M30	P3M32	P3G30	P3G32	P3T32
RMS current values	■	■	■	■	■	■[13)]	■	■[13)]	■[13)]
RMS voltage values	■	■	■	■	■	■	■	■	■
RMS active, reactive and apparent power	–	■	■	■	■	■	■	■	■
Frequency	■	■	■	■	■	■	■	■	■

Measurement	P3U20	P3U30	P3F30	P3L30	P3M30	P3M32	P3G30	P3G32	P3T32
Fundamental frequency current values	■	■	■	■	■	■[13)]	■	■[13)]	■[13)]
Fundamental frequency voltage values	–	■	■	■	■	■	■	■	■
Fundamental frequency active, reactive and apparent power values	–	■	■	■	■	■	■	■	■
Power factor	–	■	■	■	■	■	■	■	■
Energy values active and reactive	–	■	■	■	■	■	■	■	■
Energy transmitted with pulse outputs	–	■	■	■	■	■	■	■	■
Demand values: phase currents	■	■	■	■	■	■	■	■	■
Demand values: active, reactive, apparent power and power factor	–	■	■	■	■	■	■	■	■
Min and max demand values: phase currents	■	■	■	■	■	■	■	■	■
Min and max demand values: RMS phase currents	■	■	■	■	■	■	■	■	■
Min and max demand values: active, reactive, apparent power and power factor	–	■	■	■	■	■	■	■	■
Maximum demand values over the last 31 days and 12 months: active, reactive, apparent power	–	■	■	■	■	■	■	■	■
Minimum demand values over the last 31 days and 12 months: active, reactive power	–	■	■	■	■	■	■	■	■
Max and min values: currents	■	■	■	■	■	■	■	■	■
Max and min values: voltages	–	■	■	■	■	■	■	■	■
Max and min values: frequency	■	■	■	■	■	■	■	■	■
Max andmin values: active, reactive, apparent power and power factor	–	■	■	■	■	■	■	■	■

Measurement	P3U20	P3U30	P3F30	P3L30	P3M30	P3M32	P3G30	P3G32	P3T32
Harmonic values of phase current and THD	■	■	■	■	■	■[13)]	■	■[13)]	■[13)]
Harmonic values of voltage and THD	–	■	■	■	■	■	■	■	■
Voltage sags and swells	–	■	■	■	■	■	■	■	■

[13)] Function available on both sets of CT inputs

Table 9 - Logs and records

Logs and Records	P3U20	P3U30	P3F30	P3L30	P3M30	P3M32	P3G30	P3G32	P3T32
Sequence of event record	■	■	■	■	■	■	■	■	■
Disturbance record	■	■	■	■	■	■	■	■	■
Tripping context record	■	■	■	■	■	■	■	■	■

Table 10 - Monitoring functions

Monitoring functions	P3U20	P3U30	P3F30	P3L30	P3M30	P3M32	P3G30	P3G32	P3T32
Trip circuit supervision (ANSI 74)	1	1	1	1	1	1	1	1	1
Circuit breaker monitoring	1	1	1	1	1	1	1	1	1
Relay monitoring	■	■	■	■	■	■	■	■	■

2.4 Access to device configuration

You can access the device configuration via:

- the eSetup Easergy Pro setting tool
- the device's front panel

NOTE: There is a timeout mechanism for Telnet/Serial/Http connections. When logging on via the front panel or web HMI, you are automatically logged out after 15 minutes inactivity.

2.4.1 User accounts

By default, the PowerLogic P3 device has three user accounts.

Table 11 - User accounts

User account	User name	Default password	Use
User	user	0	Can view parameter values, measurements and events. This account cannot modify settings and files.
Operator	operator	1	Has the same rights as User account and can perform control actions and change settings.
Configurator	conf	2	Has the same rights as Operator account and is needed during P3 device commissioning. For example, the scaling of the voltage and current transformers can be set only with Configurator account.

2.4.2 Logging on via the front panel

NOTE: To log on via the front panel, you need a password that consists of letters, digits, or other characters in the scope of ASCII 0x21~0x7E.

1. Press ⓘ and OK on the front panel. The **Enter password** view opens.

   Figure 1 - Enter password view

   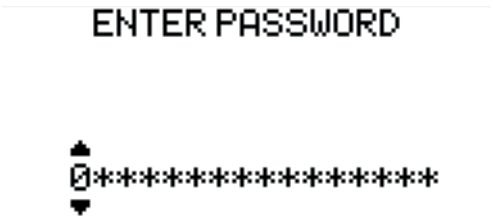

2. Enter the password for the desired access level.

   Select a digit value using △, and if the password is longer than one digit, move to the next digit position using ▷.

   NOTE: There are 16 digit positions in the **Enter password** view. Enter the password starting from the first digit position.

   For example, if the password is 2, you can enter 2***, **2*, ***2, or 0002 to log on.

3. Press OK to confirm the password.

Related topics

2.4.4 Password management

2.4.3 HTTP and FTP logon details

You can log on to the HTTP server and FTP using these user names and passwords.

Table 12 - HTTP and FTP logon details

Protocol	User name	Password
HTTP	conf	2
FTP	conf	2

2.4.4 Password management

NOTICE

CYBERSECURITY HAZARD

- Change all passwords from their default values when taking the protection device into use.
- Change all passwords regularly.
- Ensure a minimum level of password complexity according to common password guidelines.

Failure to follow these instructions can increase the risk of unauthorized access.

You can change the password for the operator or configurator user accounts in the **DEVICE/TEST > System info** setting view in eSetup Easergy Pro.

The password can contain letters, digits or other characters in the scope of ASCII 0x21~0x7E. However, the new password cannot be any of the default passwords (digits 0–4 or 9999).

Follow these guidelines to improve the password complexity and thus device security:

- Use a password of minimum 8 characters.
- Use alphabetic (uppercase and lowercase) and numeric characters in addition to symbols.
- Avoid character repetition, number or letter sequences and keyboard patterns.
- Do not use any personal information, such as birthday, name, etc.
- Do not use the same password for different user accounts.
- Do not reuse old passwords.

Also, all users must be aware of the best practices concerning passwords including:

- not sharing personal passwords
- not displaying passwords during password entry
- not transmitting passwords in email or by other means
- not saving the passwords on PCs or other devices
- no written passwords on any supports
- regularly reminding users about the best practices concerning passwords

Related topics

2.4.2 Logging on via the front panel

2.4.5 Password restoring

If you have lost or forgotten all passwords, contact Schneider Electric to restore the default passwords.

2.5 Front panel

Figure 2 - PowerLogic P3U20 and P3U30 front panel

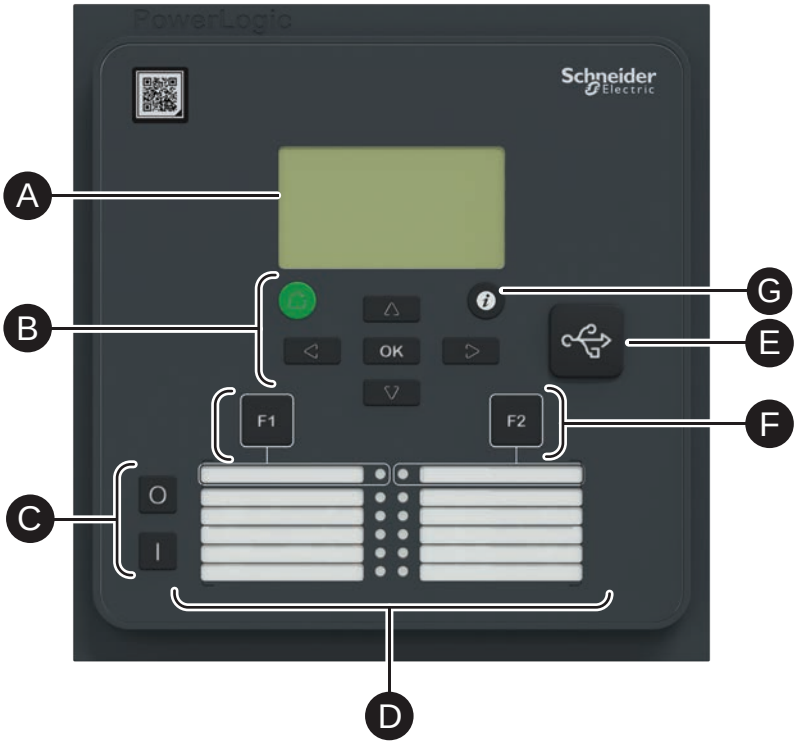

A. LCD
B. Navigation push-buttons
C. Object control buttons
D. LED indicators
E. Local port
F. Function push-buttons and LEDs showing their status
G. INFO push-button

2.5.1 Push-buttons

Symbol	Function
	HOME/CANCEL push-button for returning to the previous menu. To return to the first menu item in the main menu, press the button for at least 3 seconds.
	INFO push-button for viewing additional information, for entering the password view and for adjusting the LCD contrast.
F1	Programmable function push-button.[14)]
F2	Programmable function push-button.[14)]

Symbol	Function
OK	ENTER push-button for activating or confirming a function.
∧	UP navigation push-button for moving up in the menu or increasing a numerical value.
∨	DOWN navigation push-button for moving down in the menu or decreasing a numerical value.
<	LEFT navigation push-button for moving backwards in a parallel menu or selecting a digit in a numerical value.
>	RIGHT navigation push-button for moving forwards in a parallel menu or selecting a digit in a numerical value.
I	Circuit breaker ON push-button
O	Circuit breaker OFF push-button

[14] The default names of the function buttons are Function button 1 and 2. You can change the names of the buttons in the **Control > Names for function buttons** setting view.

2.5.2 LED indicators

The relay has 12 LED indicators on the front panel:

- two LEDs for function buttons (F1 and F2)
- two LEDs represent the unit's general status (power and service)
- eight user-configurable LEDs (A-H)

NOTE: LED A is upgraded into red color for the trip indication.

Figure 3 - LED indicators

The LED statuses are restored after device restart.

When the relay is powered, the power LED is green. During normal use, the service LED is not active, it activates only when an error occurs or the relay is not operating correctly. Should this happen, contact your local representative for further guidance. The service LED and watchdog contact are assigned to work together. Hardwire the status output into the substation's automation system for alarm purposes.

To customize the LED texts on the front panel for the user-configurable LEDs, the text may be created using a template and then printed. The printed text may be placed in the pockets beside the LEDs.

You can also customize the LED texts that are shown on the screen for active LEDs via eSetup Easergy Pro.

Table 13 - LED indicators and their information

LED indicator	LED color	Meaning	Measure / Remarks
Power LED lit	Green	The auxiliary power has been switched on.	Normal operation state
Service LED lit	Red	Internal fault. Operates in parallel with the self-supervision output	The relay attempts to reboot. If the service LED remains lit, call for maintenance.
A LED lit	Red	Trip	Configurable in the **Matrix** setting view
B–H LED lit	Yellow	Application-related status indicators.	Configurable in the **Matrix** setting view
F1 or F2 LED lit	Yellow	Corresponding function key pressed / activated	Depending on the function programmed to F1 / F2

NOTE: The LED light might seem like yellow or orange to you, and it is up to the individual difference.

2.5.3 Controlling the alarm screen

You can enable or disable the alarm screen either via the relay's local display or using eSetup Easergy Pro:

- On the local display, go to **Events > Alarms**.
- In eSetup Easergy Pro, go to **General > Local panel conf**.

2.5.4 Accessing operating levels

1. On the front panel, press ⓘ and OK .
2. Enter the password, and press OK.

2.5.5 Adjusting the LCD contrast

Prerequisite: You have entered the correct password.

1. Press , and adjust the contrast.
   - To increase the contrast, press .
   - To decrease the contrast, press .
2. To return to the main menu, press .

   NOTE: By nature, the LCD display changes its contrast depending on the ambient temperature. The display may become dark or unreadable at low temperatures. However, this condition does not affect the proper operation of the protection or other functions.

2.5.6 Testing the LEDs and LCD screen

You can start the test sequence in any main menu window.

To start the LED and LCD test:

1. Press .
2. Press .

The relay tests the LCD screen and the functionality of all LEDs.

2.5.7 Controlling an object with selective control

Prerequisite: You have logged in with the correct password and enabled selective control in the **Objects** setting view.

When selective control is enabled, the control operation needs confirmation (select before operate).

- Press to close an object.
  - Press again to confirm.
  - Press to cancel.
- Press to open an object.
  - Press again to confirm.
  - Press to cancel.

2.5.8 Controlling an object with direct control

Prerequisite: You have logged in with the correct password and enabled direct control in the **Objects** setting view.

When direct control is enabled, the control operation is done without confirmation.

- Press to close an object.
- Press to open an object.

2.5.9 Menus

This section gives an overview of the menus that you can access via the device's front panel.

The main menu

Press the right arrow to access more measurements in the main menu.

Table 14 - Main menu

Menu name	Description
Active LEDs	User-configurable texts for active LEDs
Measurements	User-configurable measurements
Single line	Single line or Single line mimic, measurements and control view. This is a default start view. To return to this view from any location, press the HOME/ CANCEL button for at least 3 seconds.
Info	Information about the relay: relay's name, order code, date, time and firmware version
P	Power: power factor and frequency values calculated by the relay. Press the right arrow to view more measurements.
E	Energy: the amount of energy that has passed through the protected line, calculated by the relay from the currents and voltages. Press the right arrow to view more energy measurements.
I	Current: phase currents and demand values of phase currents. Press the right arrow to view more current measurements.
U	Line-to-line voltages. Press the right arrow to view other voltage measurements.
Dema	Minimum and maximum phase current and power demand values
Umax	Minimum and maximum values of voltage and frequency
Imax	Minimum and maximum current values
Pmax	Minimum and maximum power values
Month	Monthly maximum current and power values

Menu name	Description
FL	Short-circuit locator applied to incomer or feeder
Evnt	Event log: event codes and time stamps
DR	Disturbance recorder configuration settings
Runh	Running hour counter
TIMR	Timers: programmable timers that you can use to preset functions
DI	Digital input statuses and settings
DO	Digital output statuses and settings
Prot	Protection: settings and statuses for various protection functions
I>, I>>, etc.	Protection stage settings and statuses. The availability of the menus are depends on the activated protection stages.
AR	Auto-recloser settings, statuses and registers
OBJ	Objects: settings related to object status data and object control (open/closed)
Lgic	Logic events and counters
CONF	General device setup: CT and VT scalings, frequency adaptation, units, device info, date, time, clock, etc.
Bus	Communication port settings
OPT	Slot info: card ID (CID) that is the name of the card used by the relay firmware
Diag	Diagnosis: various diagnostic information

2.5.9.1 Moving in the menus

Figure 4 - Moving in menus using the front panel

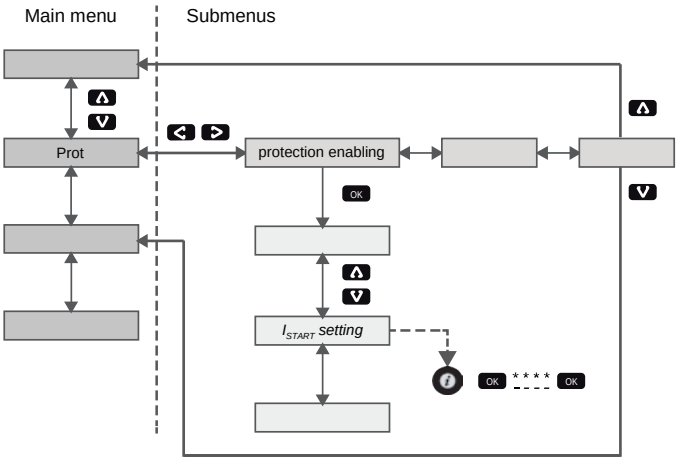

- To move in the main menu, press ∧ or ∨.
- To move in the submenus, press > or <.
- While in the submenu, press ∧ or ∨ to jump to the root.
- To enter a submenu, press OK and use ∨ or ∧ for moving down or up in the menu.
- To edit a parameter value, press ⓘ and OK.
- Enter the password, and press OK.
- To go back to the previous menu, press ⌂.
- To go back to the first menu item in the main menu, press ⌂ for at least three seconds.

NOTE: To enter the parameter edit mode, enter the password. When the value is in edit mode, its background is dark.

2.5.9.2 Local panel messages

Table 15 - Local panel messages

Value is not editable:	The value can not be edited or password is not given
Control disabled:	Object control disabled due to wrong operating level
Change causes autoboot:	Notification that if the parameter is changed the relay boots itself

2.6 eSetup Easergy Pro setting and configuration tool

⚠⚠ DANGER

HAZARD OF ELECTRIC SHOCK, EXPLOSION, OR ARC FLASH

Only qualified personnel should operate this equipment. Such work should be performed only after reading this entire set of instructions and checking the technical characteristics of the device.

Failure to follow this instruction will result in death or serious injury.

eSetup Easergy Pro is a software tool for configuring PowerLogic P3 relays. It has a graphical interface where the relay settings and parameters are grouped under seven tabs:

- General
- Measurements
- Inputs/outputs
- Protection
- Matrix
- Logs
- Communication

The contents of the tabs depend on the relay type and the selected application mode.

eSetup Easergy Pro stores the relay configuration in a setting file. The configuration of one physical relay is saved in one setting file. The configurations can be printed out and saved for later use.

For more information, see the eSetup Easergy Pro user manual.

NOTE: Download the latest version of the software from *se.com*.

NOTICE

HAZARD OF EQUIPMENT DAMAGE

After writing new settings or configurations to a device, perform a test to verify that the relay operates correctly with the new settings.

Failure to follow these instructions can result in unwanted shutdown of the electrical installation.

2.7 Low-power instrument transformers

Protection devices need current and/or voltage data from the equipment to be protected. For technical, economic and safety reasons, this data cannot be obtained directly from the equipment's medium-voltage (MV) primary elements. For this purpose, low-power instrument transformers (LPITs) can be used.

LPITs:

- reduce the amplitudes of the secondary quantities to be measured
- provide galvanic separation

There are two types of LPITs:

- low-power current transformers (LPCTs) that are connected on the MV network primary circuit and supply a reduced voltage value to the secondary circuit, proportional to the network current on which they are installed.
- low-power voltage transformers (LPVTs) that are connected to the MV network primary and supply the secondary circuit with a reduced voltage value, proportional to the network voltage on which they are installed.

Using LPITs has many benefits compared to using traditional CTs or VTs:

- improved personal safety during testing and operation
- one LPCT replaces the dedicated measurement CTs and protection CTs
- the LPCT primary rating is no longer to be as close as possible to the nominal current
- time and money savings during project planning and execution
- reduced environmental impact because of reduced instrument transformer size

LPITs compliant with the standards IEC 61869 (replacing the IEC 60044 series) part 10 or 11 and IEC 61869 part 8 with dedicated adapter can be connected to the LPIT inputs of PowerLogic P3 devices.

NOTE: Passive Rogowski coils are not compatible with our LPCT input.

3 Measurement functions

PowerLogic P3 has various amounts of analog inputs depending on the model in use. *Table 17* introduces directly measured and calculated quantities for the power system monitoring. Also see *2.3 Product selection guide*.

The relay has two operational modes: feeder and motor. In the feeder mode, the secondary currents are proportional to the CT primary values whereas in the motor mode, all protection stages use the motor's nominal current values.

The current scaling impacts the following functions:

- Protection stages
- Measurements
- Disturbance recorder
- Fault location calculation

Table 16 - Measurement functions in PowerLogic P3 – conventional CT/VT

Measurements Specification	P3U20	P3U30	P3x3x	Measurement range	Inaccuracy
RMS phase current	■	■	■	0.025–50 x I_N	I ≤ 1.5 x I_N: ±0.5 % of value or ±15 mA I > 1.5 x I_N: ±3 % of value
RMS earth fault overcurrent	■	■	■	0.003–10 x I_N	I ≤ 1.5 xI_{0N}: ±0.3 % of value or ±0.2 % of I_{0N} I > 1.5 xI_{0N}: ±3 % of value
RMS line-to-line voltage[15)]	—	■	■	0.005–1.7 x U_N	±0.5 % or ±0.3 V
RMS phase-to-neutral voltage[15)]	—	■	■	0.005–1.7 x U_N	±0.5 % or ±0.3 V
RMS active power (PF >0.5)	—	■	■	±0.1–1.5 x P_N	±1 % for range 0.3–1.5xP_N ±3 % for range 0.1–0.3xP_N
RMS reactive power (PF >0.5)	—	■	■	±0.1–1.5 x Q_N	±1 % for range 0.3–1.5xQ_N ±3 % for range 0.1–0.3xQ_N
RMS apparent power (PF >0.5)	—	■	■	±0.1–1.5 x S_N	±1 % for range 0.3–1.5xS_N ±3 % for range 0.1–0.3xS_N

Measurements Specification	P3U20	P3U30	P3x3x	Measurement range	Inaccuracy
Frequency	■	■	■	16 Hz – 75 Hz	±10 mHz
Fundamental frequency current values	■	■	■	0.025-50 x I_N	I ≤ 1.5 x I_N: ±0.5 % of value or ±15 mA I > 1.5 x I_N: ±3 % of value
Fundamental frequency voltage values	—	■	■	0.005–1.7 x U_N	±0.5 % or ±0.3 V
Fundamental frequency active, reactive and apparent power values	—	■	■	±0.1–1.5 x P_N	±1 % for range 0.3–1.5xP_N ±3 % for range 0.1–0.3xP_N
Fundamental frequency active power values	—	■	■	±0.1–1.5 x Q_N	±1 % for range 0.3–1.5xQ_N ±3 % for range 0.1–0.3xQ_N
Fundamental frequency reactive power values	—	■	■	±0.1–1.5 x S_N	±1 % for range 0.3–1.5xS_N ±3 % for range 0.1–0.3xS_N
Power factor	—	■	■	0.02–1	±2° or ±0.02 for PF > 0.5
Active energy	—	■	■		±1 % for range 0.3–1.5xEP_N
Reactive energy	—	■	■		±1 %/1h for range 0.3–1.5xEQ_N ±3 %/1h for range 0.1–0.3xEQ_N
Energy transmitted with pulse outputs	—	■	■		±1 %/1h for range 0.3–1.5xEP_N ±3 %/1h for range 0.1–0.3xEP_N
Demand values: phase currents	■	■	■	0.025–50 x I_N	I ≤ 1.5 x I_N: ±0.5 % of value or ±15 mA I > 1.5 x I_N ±3 % of value

Measurements Specification	P3U20	P3U30	P3x3x	Measurement range	Inaccuracy
Active power demand	—	■	■	±0.1–1.5 x P_N	±1 % for range 0.3–1.5xP_N ±3 % for range 0.1–0.3xP_N
Reactive power demand	—	■	■	±0.1–1.5 x Q_N	±1 % for range 0.3–1.5xQ_N ±3 % for range 0.1-0.3xQ_N
Apparent power demand	—	■	■	±0.1–1.5 x S_N	±1 % for range 0.3–1.5xS_N ±3 % for range 0.1–0.3xS_N
Power factor demand	—	■	■		±2° or ±0.02 for PF > 0.5
Min. and max. demand values: phase currents	■	■	■	0.025–50 x I_N	I ≤ 1.5 x I_N: ±0.5 % of value or ±15 mA I > 1.5 x I_N ±3 % of value
Min. and max. demand values: RMS phase currents	■	■	■	0.025–50 x I_N	I ≤ 1.5 x I_N: ±0.5 % of value or ±15 mA I > 1.5 x I_N ±3 % of value
Min. and max. demand values: active, reactive, apparent power and power factor	—	■	■		±1 % for range 0.3–1.5xP_N, Q_N, S_N ±3 % for range 0.1–0.3xP_N, Q_N, S_N
Maximum demand values over the last 31 days and 12 months: active, reactive, apparent power	—	■	■		±1 % for range 0.3–1.5xP_N, Q_N, S_N ±3 % for range 0.1–0.3xP_N, Q_N, S_N

Measurements Specification	P3U20	P3U30	P3x3x	Measurement range	Inaccuracy
Minimum demand values over the last 31 days and 12 months: active, reactive power	—	■	■		±1 % for range 0.3–1.5xP_N, Q_N, S_N ±3 % for range 0.1–0.3xP_N, Q_N, S_N
Max. and min. values: currents	■	■	■	0.025–50 x I_N	I ≤ 1.5 x I_N: ±0.5 % of value or ±15 mA I > 1.5 x I_N ±3 % of value
Max. and min. values: voltages	—	■	■	0.005–1.7 x U_N	±0.5 % or ±0.3 V
Max. and min. values: frequency	■	■	■	16 Hz-75 Hz	±10 mHz
Max. and min. values: active, reactive, apparent power and power factor	—	■	■	±0.1–1.5 x P_N, Q_N, S_N	±1 % for range 0.3–1.5xP_N, Q_N, S_N ±3 % for range 0.1–0.3xP_N, Q_N, S_N ±2° or ±0.02 for PF > 0.5
Harmonic values of phase current and THD	■	■	■	2nd–15th	
Harmonic values of voltage and THD	—	■	■	2nd–15th	
Voltage sags and swells	—	■	■	0.005–1.7 x U_N	±2° or ±0.02 for PF > 0.5

[15)] The RMS voltage measurement is dependent on the voltage scaling mode.

Table 17 - Measurement functions in PowerLogic P3 – LPIT

Measurements Specification	P3U20	P3U30	P3x3x	Measurement range	Inaccuracy
RMS phase current	■	■	■	0.05-45 x I_N	I ≤ 1.5 x I_N: ±0.5 % of value or ±15 mA I > 1.5 x I_N: ±3 % of value
RMS earth fault overcurrent	■	■	■	0.003–10 x I_N	I ≤ 1.5 xI_{0N}: ±0.3 % of value or ±0.2 % of I_{0N} I > 1.5 xI_{0N}: ±3 % of value
RMS phase-to-neutral voltage	—	■	■	0.05–2.08 x U_N	±0.5 % or ±0.3 V
RMS active power (PF >0.5)	—	■	■	0.005–1.7 x U_N	±1 % for range 0.3–1.5xP_N ±3 % for range 0.1–0.3xP_N
RMS reactive power (PF >0.5)	—	■	■	±0.1–1.5 x P_N	±1 % for range 0.3–1.5xQ_N ±3 % for range 0.1–0.3xQ_N
RMS apparent power (PF >0.5)	—	■	■	±0.1–1.5 x Q_N	±1 % for range 0.3–1.5xS_N ±3 % for range 0.1–0.3xS_N
Frequency	■	■	■	45-65 Hz	±10 mHz
Fundamental frequency current values	■	■	■	0,05-45 x I_N	I ≤ 1.5 x I_N: ±0.5 % of value or ±15 mA I > 1.5 x I_N: ±3 % of value
Fundamental frequency voltage values	—	■	■	0,05–2.08 x U_N	±0.5 % or ±0.3 V
Fundamental frequency active power values	—	■	■	±0.1–1.5 x P_N	±1 % for range 0.3–1.5xP_N ±3 % for range 0.1–0.3xP_N

Measurements Specification	P3U20	P3U30	P3x3x	Measurement range	Inaccuracy
Fundamental frequency reactive power values	—	■	■	±0.1–1.5 x Q_N	±1 % for range 0.3–1.5xQ_N ±3 % for range 0.1–0.3xQ_N
Fundamental frequency apparent power values	—	■	■	±0.1–1.5 x S_N	±1 % for range 0.3–1.5xS_N ±3 % for range 0.1–0.3xS_N
Power factor	—	■	■	0.02–1	±2° or ±0.02 for PF > 0.5
Active energy	—	■	■		±1 % for range 0.3–1.5xEP_N
Reactive energy	—	■	■		±1 %/1h for range 0.3–1.5xEQ_N ±3 %/1h for range 0.1–0.3xEQ_N
Energy transmitted with pulse outputs	—	■	■		±1 %/1h for range 0.3–1.5xEP_N ±3 %/1h for range 0.1–0.3xEP_N
Demand values: phase currents	■	■	■	0,05–45 x I_N	I ≤ 1.5 x I_N: ±0.5 % of value or ±15 mA I > 1.5 x I_N ±3 % of value
Active power demand	—	■	■	±0.1–1.5 x P_N	±1 % for range 0.3–1.5xP_N ±3 % for range 0.1–0.3xP_N
Reactive power demand	—	■	■	±0.1–1.5 x Q_N	±1 % for range 0.3–1.5xQ_N ±3 % for range 0.1–0.3xQ_N
Apparent power demand	—	■	■	±0.1–1.5 x S_N	±1 % for range 0.3–1.5xS_N ±3 % for range 0.1–0.3xS_N
Power factor demand	—	■	■		±2° or ±0.02 for PF > 0.5

Measurements Specification	P3U20	P3U30	P3x3x	Measurement range	Inaccuracy
Min. and max. demand values: phase currents	■	■	■	0.05–45 x I_N	I ≤ 1.5 x I_N: ±0.5 % of value or ±15 mA I > 1.5 x I_N ±3 % of value
Min. and max. demand values: RMS phase currents	■	■	■	0.05–45 x I_N	I ≤ 1.5 x I_N: ±0.5 % of value or ±15 mA I > 1.5 x I_N ±3 % of value
Min. and max. demand values: active, reactive, apparent power and power factor	—	■	■		±1 % for range 0.3–1.5xP_N, Q_N, S_N ±3 % for range 0.1–0.3xP_N, Q_N, S_N
Maximum demand values over the last 31 days and 12 months: active, reactive, apparent power	—	■	■		±1 % for range 0.3–1.5xP_N, Q_N, S_N ±3 % for range 0.1–0.3xP_N, Q_N, S_N
Minimum demand values over the last 31 days and 12 months: active, reactive power	—	■	■		±1 % for range 0.3–1.5xP_N, Q_N, S_N ±3 % for range 0.1–0.3xP_N, Q_N, S_N
Max. and min. values: currents	■	■	■	0.05–45 x I_N	I ≤ 1.5 x I_N: ±0.5 % of value or ±15 mA I > 1.5 x I_N ±3 % of value
Max. and min. values: voltages	—	■	■	0,05–2.08 x U_N	±0.5 % or ±0.3 V
Max. and min. values: frequency	■	■	■	45–65 Hz	±10 mHz

Measurements Specification	P3U20	P3U30	P3x3x	Measurement range	Inaccuracy
Max. and min. values: active, reactive, apparent power and power factor	—	■	■	±0.1–1.5 x P_N, Q_N, S_N	±1 % for range 0.3–1.5xP_N, Q_N, S_N ±3 % for range 0.1–0.3xP_N, Q_N, S_N ±2° or ±0.02 for PF > 0.5
Harmonic values of phase current and THD	■	■	■	2nd–15th	
Harmonic values of voltage and THD	—	■	■	2nd–15th	
Voltage sags and swells	—	■	■	0.05–2.08 x U_N	±2° or ±0.02 for PF > 0.5

NOTE: The measurement display's refresh rate is 0.2 s.

Refer to the following table for the right Modbus address to retrieve measurement values under voltage measurement modes.

Table 18 - Modbus measurement register list

	Modbus register	RMS voltage mean 3045	UL1 RMS 6250	UL2 RMS 6251	UL3 RMS 6252	U12 RMS 6253	U23 RMS 6254	Uo RMS 6255	Uo RMS 6256	UL1y RMS 6257	U12y RMS 6258	UL1y(LN+Uo/y/z) RMS 6259	U12y(LL+Uo/y/z) RMS 6260	UL1z RMS 6261	U12z RMS 6262
Measurement mode															
2LL +Uo		■	—	—	—	■	■	—	■	—	—	—	—	—	—
3LN		■	■	■	■	—	—	—	—	—	—	—	—	—	—
3LN/LN_y		■	■	■	■	—	—	—	—	■	—	—	—	—	—
3LN/LL_y		■	■	■	■	—	—	—	—	—	■	—	—	—	—
2LL +Uo/LNy		■	—	—	—	■	■	—	■	■	—	—	—	—	—

	Modbus register	RMS voltage mean 3045	UL1 RMS 6250	UL2 RMS 6251	UL3 RMS 6252	U12 RMS 6253	U23 RMS 6254	Uo RMS 6255	Uo RMS 6256	UL1y RMS 6257	U12y RMS 6258	UL1y(LN +Uo/y/z) RMS 6259	U12y(LL +Uo/y/z) RMS 6260	UL1z RMS 6261	U12z RMS 6262
2LL +Uo/LLy		■	—	—	—	■	■	—	■	—	■	—	—	—	—
3LN +Uo		■	■	■	■	—	—	■	—	—	—	—	—	—	—
LL +Uo/y/z		—	—	—	—	■	—	—	■	—	—	—	■	—	■
LN +Uo/y/z		—	■	—	—	—	—	—	■	—	—	■	—	■	—

3.1 Primary, secondary and per unit scaling

Many measurement values are shown as primary values although the device is connected to secondary signals. Some measurement values are shown as relative values – per unit or percent. Almost all start setting values use relative scaling.

The scaling is done using the rated values of VTs and CTs or LPVTs and LPCTs depending on the selected model order option.

Scaling settings

The scaling settings define the characteristics of measurement transformers connected to the PowerLogic P3 protection device and determine the correct adaptation and performance of the metering and protection functions. They are accessed via:

- eSetup Easergy Pro or the web HMI in the **General > Scaling** view
- on local panel in the CT-VT view of the **General** menu

Table 19 - Phase current and earth fault overcurrent scaling parameters – conventional CT and VT

Parameter	Description
Nominal input (IL side)	Rated value of the phase current input. The given thermal withstand, burden and impedance are based on this value. See *Table 151* for details.
CT primary	Primary current value of the IL (high-voltage) current transformer
CT secondary	Secondary current value of the IL (high-voltage) current transformer
I_{01} CT primary	Primary current value of the earth fault I_{01} overcurrent transformer

Parameter	Description
I_{01} CT secondary	Secondary current value of the earth fault I_{01} overcurrent transformer
Nominal I_{01} input	Selectable nominal input rating for the earth fault overcurrent input. Select either 5A or 1A depending on which Io input is used. The given thermal withstand, burden and impedance are based on this value. See *Table 151* for details.
VT primary	Primary voltage value of the voltage transformer (only P3U30 devices)
VT secondary	Secondary voltage value of the voltage transformer (only P3U30 devices)
VT_0 secondary	Secondary voltage value of the neutral voltage displacement voltage transformer
Voltage measurement mode	The device can be connected either to zero-sequence voltage, line-to-line voltage or line-to-neutral voltage. Set the voltage measurement mode according to the type of connection used.
Frequency adaptation mode	Parameter used to set the system frequency. There are three modes available: manual, auto and fixed. For more information, see *3.1.1 Frequency adaptation mode*.
Adapted frequency	When the frequency adaption mode is set to manual, you can set the frequency in the **Adapted frequency** field, and it is not be updated even if the measured frequency is different.
Angle memory duration	Time setting for the directional overcurrent stage to keep the phase angle fixed if the system voltage collapses
Power direction	Direction of the power flow: • “Outgoing” retains all the operation as it is in the existing PowerLogic P3 platform. • “Incoming” changes the sign of real and reactive power by multiplying the said quantities by -1.
Residual value scaling	Choose to show primary or per unit value of residual currents and voltages.

Table 20 - Phase current and earth fault overcurrent scaling parameters – LPIT

Parameter	Description	Value
LPCT rated nominal current	All measurements are scaled by the LPCT rated nominal current and LPCT rated secondary voltage setting.	10 A – 1 kA
LPCT rated secondary voltage	All measurements are scaled by the LPCT rated nominal current and LPCT rated secondary voltage setting.	Fixed value

Parameter	Description	Value
Protection nominal current	In feeder protection devices (P3U and P3F), the Protection nominal current setting value is used as a reference for all protection settings. **NOTE:** Measurement values are not scaled by the Protection nominal current setting value.	1–1600 A
Use current sensor corrections	If the 'Use current sensor corrections' checkbox is selected, the correction factor settings becomes visible for I_{L1}–I_{L3}. When the checkbox is not selected, the correction factors are not shown.	
IL* magnitude correction factor	Factor to correct the current sensor amplitude. The value is found on the current sensor nameplate. If correction values are not used, the default value is applied.	0.900–1.100 Resolution 0.001 Default value 1.000
IL* phase correction offset	Factor to correct the current sensor phase offset. The value is found on the current sensor nameplate. If correction values are not used, the default value is applied.	+-5.00° Resolution 0.01° Default value 0.00°
LPVT rated primary voltage	All measurements are scaled by the LPVT rated primary voltage and LPVT rated secondary voltage setting.	50–500 000 V
LPVT rated secondary voltage	All measurements are scaled by the LPVT rated primary voltage and LPVT rated secondary voltage setting.	Fixed value
Network voltage	All protection settings are associated to the network voltage setting. **NOTE:** Measurement values are not scaled by the Protection nominal current setting value.	50–500 000 V
Use voltage sensor corrections	If the 'Use voltage sensor corrections' checkbox is selected, the correction factor settings becomes visible for U1–U4. If the checkbox is not selected, the correction factors are not shown.	
Primary VT type		LPVT, VT + LPVT Default value LPVT

Parameter	Description	Value
U* magnitude correction factor	Factor to correct the voltage sensor amplitude. The value is found on the voltage sensor nameplate. If correction values are not used, the default value is applied.	When LPVT selected: • 0.900–1.100 • Resolution 0.001 • Default value 1.000 When VT + LPVT selected: • 30.000–60.000 • Resolution 0.001
U* phase correction offset	Factor to correct the voltage sensor phase offset. The value is found on the voltage sensor nameplate. If correction values are not used, default value is applied	+-5.00° Resolution 0.01° Default value 0.00°
I_{01} CT primary	Primary current value of the earth fault I_{01} overcurrent transformer	1–20000 A
I_{01} CT secondary	Secondary current value of the earth fault I_{01} overcurrent transformer	0.1–10 A
Nominal I_{01} input	Selectable nominal input rating for the earth fault overcurrent input. Select either 5 A or 1 A depending on which I_0 input is used. The given thermal withstand, burden and impedance are based on this value. See *Table 151* for details.	1.0 A / 5.0 A
I_{02} CT primary	Primary current value of the earth fault I_{02} overcurrent transformer	1–20000 A
I_{02} CT secondary	Secondary current value of the earth fault I_{02} overcurrent transformer	0.1–10 A
Nominal I_{02} input	Selectable nominal input rating for the earth fault overcurrent input. Select either 1 A or 0.2 A depending on which I_0 input is used. The given thermal withstand, burden and impedance are based on this value. See *Table 151* for details.	0.2 A / 1.0 A
VT_0 secondary	Secondary voltage value of the neutral voltage displacement voltage transformer	25 000–240 0000 V

Voltage measurement mode	The device can be connected either to zero-sequence voltage or line-to-neutral voltage. Set the voltage measurement mode according to the type of connection used.	U_0, 3LN, 3LN/LNy, 3LN +Uo, LN+U_0/y/z
Frequency adaptation mode	Parameter used to set the system frequency. There are three modes available: manual, auto and fixed. For more information, see *3.1.1 Frequency adaptation mode*.	
Adapted frequency	When the frequency adaption mode is set to manual, you can set the frequency in the **Adapted frequency** field, and it is not be updated even if the measured frequency is different.	45–65 Hz
Angle memory duration	Time setting for the directional overcurrent stage to keep the phase angle fixed if the system voltage collapses	0.20–3.20 s
Power direction	Direction of the power flow: • “Outgoing” retains all the operation as it is in the existing PowerLogic P3 platform. • “Incoming” changes the sign of real and reactive power by multiplying the said quantities by -1.	Outgoing/Incoming
Residual value scaling	Choose to show primary or per unit value of residual currents and voltages.	PU;Pri

The scaling equations presented in *3.1.2 Current scaling* and *3.1.3 Voltage scaling for analog module* are useful when doing secondary testing.

3.1.1 Frequency adaptation mode

You can set the system frequency in **General > Scaling** in eSetup Easergy Pro.

There are three frequency adaptation modes available:

- **Manual**: When the adaption mode is set to manual, you can set the frequency in the **Adapted frequency** field, and it will not be updated even if the measured frequency is different. However, the relay monitors the system frequency internally and adapts to the new frequency even if the frequency has been set manually.
- **Auto**: The network frequency is automatically updated when the relay has measured the voltage for approximately 45 seconds. The **Adapted frequency** field is updated even if it has been set previously. The frequency is measured from the voltage signals.

Table 21 - Voltage signals

Voltage measurement mode	Voltage	Voltage channel
2LL+U_0, 2LL+U_0/LNy, 2LL +U_0/LLy	U_{12}, U_{23}	U_1, U_2
3LN, 3LN+U_0, 3LN/LNy, 3LN/LLy	U_{L1}, U_{L2}	U_1, U_2
LN+$U_{0/y/z}$	U_{L1}	U_1
LL+$U_{0/y/z}$	U_{12}	U_1

In P3U20 relays, the frequency adaptation is taken from the measured currents.

- **Fixed**: The frequency is not updated based on the measured voltage and only the set value is used. This mode is recommended to be used for the line-differential function.

Frequency is not measured under the following two conditions:

- The maximum secondary value of three phase to phase or phase to neutral voltage is less than 5.5 V.
- For the P3U20 device only, the maximum secondary value of three phase current is less than 0.625 A.

3.1.2 Current scaling

NOTE: The rated value of the relay's current input, for example 5 A or 1 A, does not have any effect on the scaling equations, but it defines the measurement range and the maximum allowed continuous current. See *Table 151* for details.

Table 22 - Primary and secondary scaling – conventional CT

	Current (CT) **Residual current calculated**
secondary → primary	$I_{PRI} = I_{SEC} \cdot \frac{CT_{PRI}}{CT_{SEC}}$
primary → secondary	$I_{SEC} = I_{PRI} \cdot \frac{CT_{SEC}}{CT_{PRI}}$

For earth fault overcurrent to input I_0, use the corresponding CT_{PRI} and CT_{SEC} values. For earth fault stages using $I_{0\ Calc}$ signals, use the phase current CT values for CT_{PRI} and CT_{SEC}.

Examples

1. **Secondary to primary**

CT = 500 / 5
Current to the relay's input is 4 A.
=> Primary current is I_{PRI} = 4 x 500 / 5 = 400 A

2. **Primary to secondary**

   CT = 500 / 5
   The relay displays I_{PRI} = 400 A
   => Injected current is I_{SEC} = 400 x 5 / 500 = 4 A

Per unit [pu] scaling

For phase currents:

1 pu = 1 x I_{MODE} = 100%, where I_{MODE} is the rated current according to the mode. See *1.3 Abbreviations and terms*.

For earth fault overcurrents

1 pu = 1 x CT_{SEC} for secondary side and 1 pu = 1 x CT_{PRI} for primary side.

	Phase current scaling	**Earth fault overcurrent ($3I_0$) scaling**
secondary → per unit	$I_{PU} = \frac{I_{SEC} \cdot CT_{PRI}}{CT_{SEC} \cdot I_{MODE}}$	$I_{PU} = \frac{I_{SEC}}{CT_{SEC}}$
per unit → secondary	$I_{SEC} = I_{PU} \cdot CT_{SEC} \cdot \frac{I_{MODE}}{CT_{PRI}}$	$I_{SEC} = I_{PU} \cdot CT_{SEC}$

Examples

1. **Secondary to per unit**

   CT = 750 / 5
   Current injected to the relay's inputs is 7 A.
   Per unit current is I_{PU} = 7 / 5 = 1.4 pu = 140%

2. **Secondary to per unit for phase currents**

   CT = 750/5
   I_N or I_{MOT} = 525 A
   Current injected to the relay's inputs is 7 A.
   Per unit current is I_{PU} = 7 x 750 / (5 x 525) = 2.00 pu = 2.00 x (I_N or I_{MOT}) = 200%

3. **Per unit to secondary**

   CT = 750 / 5
   The relay setting is 2 pu = 200%.
   Secondary current is I_{SEC} = 2 x 5 = 10 A

4. **Per unit to secondary for phase currents**

   CT = 750 / 5
   I_N or I_{MOT} = 525 A

The relay setting is 2 x (I_N or I_{MOT}) = 2 pu = 200%.

Secondary current is I_{SEC} = 2 x 5 x 525 / 750 = 7 A

5. **Secondary to per unit for earth fault overcurrent**

   Input is I_0.

   CT_0 = 50 / 1

   Current injected to the relay's input is 30 mA.

   Per unit current is I_{PU} = 0.03 / 1 = 0.03 pu = 3%

6. **Secondary to per unit for earth fault overcurrent**

   Input is I_0.

   CT_0 = 50 / 1

   The relay setting is 0.03 pu = 3%.

   Secondary current is I_{SEC} = 0.03 x 1 = 30 mA

7. **Secondary to per unit for earth fault overcurrent**

   Input is $I_{0\ Calc}$.

   CT = 750 / 5

   Currents injected to the relay's I_{L1} input is 0.5 A.

   I_{L2} = I_{L3} = 0.

   Per unit current is I_{PU} = 0.5 / 5 = 0.1 pu = 10%

8. **Secondary to per unit for earth fault overcurrent**

   Input is $I_{0\ Calc}$.

   CT = 750 / 5

   The relay setting is 0.1 pu = 10%.

   If I_{L2} = I_{L3} = 0, then secondary current to I_{L1} is I_{SEC} = 0.1 x 5 = 0.5 A

3.1.3 Voltage scaling for analog module

NOTE: Voltage transformer scaling is based on the line-to-line voltages in all voltage measurements modes.

Table 24 - Primary/secondary scaling of line-to-line voltages

	Line-to-line voltage measurement (LL) with VT	**Line-to-neutral voltage measurement (LN) with VT**
secondary → primary	$U_{PRI} = U_{SEC} \cdot \frac{VT_{PRI}}{VT_{SEC}}$	$U_{PRI} = \sqrt{3} \cdot U_{SEC} \cdot \frac{VT_{PRI}}{VT_{SEC}}$
primary → secondary	$U_{SEC} = U_{PRI} \cdot \frac{VT_{SEC}}{VT_{PRI}}$	$U_{SEC} = \frac{U_{PRI}}{\sqrt{3}} \cdot \frac{VT_{SEC}}{VT_{PRI}}$

Table 25 - Primary/secondary scaling of line-to-line voltages

	Line-to-line voltage measurement (LL) with VT	**Line-to-neutral voltage measurement (LN) with VT**	**Line-to-neutral voltage measurement with LPVT**
secondary → primary	$U_{PRI} = U_{SEC} \cdot \frac{VT_{PRI}}{VT_{SEC}}$	$U_{PRI} = \sqrt{3} \cdot U_{SEC} \cdot \frac{VT_{PRI}}{VT_{SEC}}$	
primary → secondary	$U_{SEC} = U_{PRI} \cdot \frac{VT_{SEC}}{VT_{PRI}}$	$U_{SEC} = \frac{U_{PRI}}{\sqrt{3}} \cdot \frac{VT_{SEC}}{VT_{PRI}}$	

Examples

1. **Secondary to primary. Voltage measurement mode is "2LL+U_0"**

   VT = 12000/110
   Voltage connected to the relay's input U_A or U_B is 100 V.
   => Primary voltage is U_{PRI} = 100x12000/110 = 10909 V.

2. **Secondary to primary. Voltage measurement mode is "3LN**

   VT = 12000/110
   Three phase symmetric voltages connected to the relay's inputs U_A, U_B and U_C are 57.7 V.
   => Primary voltage is U_{PRI} = √3 x58x12000/110 = 10902 V

3. **Primary to secondary. Voltage measurement mode is "2LL+U_0"**

   VT = 12000/110
   The relay displays U_{PRI} = 10910 V.
   => Secondary voltage is U_{SEC} = 10910x110/12000 = 100 V

4. **Primary to secondary. Voltage measurement mode is "3LN**

   VT = 12000/110
   The relay displays $U_{12} = U_{23} = U_{31}$ = 10910 V.
   => Symmetric secondary voltages at U_A, U_B and U_C are U_{SEC} = 10910/√3 x110/12000 = 57.7 V.

Per unit [pu] scaling of line-to-line voltages

One per unit = 1 pu = 1 x U_N = 100%, where U_N = rated voltage of the VT.

	Line-to-line voltage scaling	
	Voltage measurement mode = "2LL+U_0", "1LL +U_0/LLy", "2LL/LLy", "LL/LLy/LLz"	**Voltage measurement mode = "3LN"**
secondary → per unit	$U_{PU} = \frac{U_{SEC}}{VT_{SEC}} \cdot \frac{VT_{PRI}}{U_N}$	$U_{PU} = \sqrt{3} \cdot \frac{U_{SEC}}{VT_{SEC}} \cdot \frac{VT_{PRI}}{U_N}$
per unit → secondary	$U_{SEC} = U_{PU} \cdot VT_{SEC} \cdot \frac{U_N}{VT_{PRI}}$	$U_{SEC} = U_{PU} \cdot \frac{VT_{SEC}}{\sqrt{3}} \cdot \frac{U_N}{VT_{PRI}}$

Examples

1. **Secondary to per unit. Voltage measurement mode is "2LL+U_0".**

   VT = 12000/110
   Voltage connected to the relay's input U_A or U_B is 110 V.
   => Per unit voltage is U_{PU} = 110/110 = 1.00 pu = 1.00 x U_N = 100%

2. **Secondary to per unit. Voltage measurement mode is "3LN".**

   VT = 12000/110
   Three symmetric phase-to-neutral voltages connected to the relay's inputs U_A, U_B and U_C are 63.5 V
   => Per unit voltage is U_{PU} = √3 x63.5/110x12000/11000 = 1.00 pu = 1.00 x U_N = 100%

3. **Per unit to secondary. Voltage measurement mode is "2LL+U_0".**

   VT = 12000/110
   The relay displays 1.00 pu = 100%.
   => Secondary voltage is U_{SEC} = 1.00 x 110 x 11000/12000 = 100.8 V

4. **Per unit to secondary. Voltage measurement mode is "3LN".**

   VT = 12000/110
   U_N = 11000 V
   The relay displays 1.00 pu = 100%.
   => Three symmetric phase-to-neutral voltages connected to the relay 's inputs U_A,U_B and U_C are U_{SEC} = 1.00 x 110/√3 x 11000/12000 = 58.2 V

Per unit [pu] scaling of neutral displacement voltage

	Neutral displacement voltage (U_0) scaling	
	Voltage measurement mode = "2LL+U_0", "1LL +U_0/LLy"	**Voltage measurement mode = "3LN"**
secondary → per unit	$U_{PU} = \frac{U_{SEC}}{U_{0SEC}}$	$U_{PU} = \frac{1}{VT_{SEC}} \cdot \frac{\left\lvert \overline{U}_a + \overline{U}_b + \overline{U}_c \right\rvert_{SEC}}{\sqrt{3}}$
per unit →secondary	$U_{SEC} = U_{PU} \cdot U_{0SEC}$	$\left\lvert \overline{U}_a + \overline{U}_b + \overline{U}_c \right\rvert_{SEC} = \sqrt{3} \cdot U_{PU} \cdot VT_{SEC}$

Examples

1. **Secondary to per unit. Voltage measurement mode is "2LL+U_0".**

   U_{0SEC} = 110 V (This is a configuration value corresponding to U_0 at full earth fault.)
   Voltage connected to the relay's input U_C is 22 V.
   => Per unit voltage is U_{PU} = 22/110 = 0.20 pu = 20%

2. **Secondary to per unit. Voltage measurement mode is "3LN".**

   VT = 12000/110
   Voltage connected to the relay's input U_A is 38.1 V, while U_B = U_C = 0.
   => Per unit voltage is U_{PU} = (38.1+0+0)/(√3 x110) = 0.20 pu = 20%

3. **Per unit to secondary. Voltage measurement mode is "2LL+U_0".**

   U_{0SEC} = 110 V (This is a configuration value corresponding to U_0 at full earth fault.)
   The relay displays U_0 = 20%.
   => Secondary voltage at input U_C is U_{SEC} = 0.20x110 = 22 V

4. **Per unit to secondary. Voltage measurement mode is "3LN".**

   VT = 12000/110
   The relay displays U_0 = 20%.
   => If U_B = U_C = 0, then secondary voltages at U_A is USEC = √3 x0.2x110 = 38.1 V

3.1.4 Residual value scaling

“Residual value scaling” setting allows users to choose to show primary or per unit value of residual currents and voltages. The conversion is based on primary and secondary nominal value of CT and PT.

The user can see the changes through “measurements -> current and voltage” and residual value relevant protection page, such as 50N/51N, 67N,67NI,59N and 50BF.

Table 26 - Scaling equations between residual pu voltage and primary voltage

	Residual voltage scaling	
	Voltage measurement mode with U_0 measurement	**Voltage measurement mode without U_0 measurement**
Primary → per unit	$U_{pu} = \frac{U_{PRI}}{U_{0SEC}} \cdot \frac{VT_{SEC}}{VT_{PRI}}$	$U_{PU} = \frac{\lvert \overline{U_a} + \overline{U_b} + \overline{U_c} \rvert_{PRI}}{\sqrt{3} \cdot VT_{PRI}}$
Per unit → primary	$U_{PRI} = U_{PU} \cdot U_{0SEC} \cdot \frac{VT_{PRI}}{VT_{SEC}}$	$\lvert \overline{U_a} + \overline{U_b} + \overline{U_c} \rvert_{PRI} = \sqrt{3} \cdot U_{PU} \cdot VT_{PRI}$

Examples

1. Primary to per unit for with U_0 measurement

   VT = 10000 / 100

   U_{0SEC} = 57.75 V

   The relay displays U_0 = 57.75 V

   The per unit U_{PU} = (57.75 * 100) / (57.75 * 10000) = 0.01 pu

2. Per unit to primary for with U_0 measurement

   VT = 10000 / 100
   U_{0SEC} = 57.75 V
   The U_0 injected to the relay is 0.01 pu.
   The primary value is U_{PRI} = 0.01 * 57.75 * 10000 / 100 = 57.75 V.

3. Primary to per unit for without U_0 measurement

   VT = 10000 / 100

   Three symmetric phase-to-neutral voltages U_A is 1747 V, while U_B = U_C = 0.

   Per unit value is U_{PU} = (1747 + 0 + 0)/(√3 * 10000) = 0.1 pu = 10%.

4. Per unit to primary value for without U_0 measurement

   VT = 10000 / 100

   The relay displays U_0 = 0.1 pu.

   The primary value is U_{0PRI} = √3 * 0.1 * 10000 = 1747 V.

Table 27 - Scaling equations between residual pu current and primary current

	Residual current scaling	
	Phase current scaling	**Calculated I_0 scaling**
Primary → per unit	$I_{PU} = \frac{I_{PRI}}{I_{MODE}}$	$I_{PU} = \frac{I_{PRI}}{CT_{PRI}}$
Per unit → primary	$I_{PRI} = I_{PU} \cdot I_{MODE}$	$I_{PRI} = I_{PU} \cdot CT_{PRI}$

Examples

1. Primary to per unit for phase current scaling

   Input is I_0.

   The relay displays I_{PRI} = 50 A.

   The I_{MODE} = 50 A.

   Per unit current is I_{pu} = 50 / 50 = 1 pu.

2. Per unit to primary for phase current scaling

   Input is I_0.

   U_{0SEC} = 57.75 V

   The relay displays I_{pu} = 1 pu.

   The I_{MODE} = 50 A.

   Primary current is I_{PRI} = 1 * 50 = 400 A.

3. Primary to per unit for calculated I_0 scaling

   Input is I_{0Calc}

   CT = 750 / 5.

   Current I_{L1} is 75 A.

   I_{L2} = I_{L3} = 0

   Per unit current is I_{PU} = 75 / 750 = 0.1 pu = 10%.

4. Per unit to primary for calculated I_0 scaling

   Input is I_{0Calc} .

   CT = 750 / 5

   Current injected to the relay's inputs is 0.1 pu.

   Primary current is I_{PRI} = 0.1 * 750 = 75 A.

3.2 Measurements for protection functions

Figure 5 - Example of various current values of a transformer inrush current

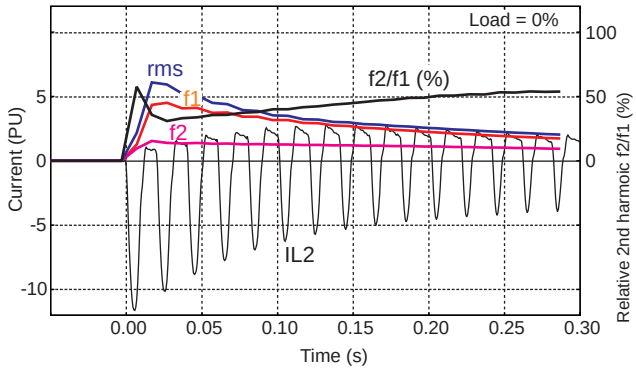

All the direct measurements and most protection functions are based on fundamental frequency values.

Figure 5 shows a current waveform and the corresponding fundamental frequency component f1, second harmonic f2, and RMS value in a special case where the current deviates significantly from a pure sine wave.

3.3 RMS values

RMS currents

The relay calculates the RMS value of each phase current. The minimum and maximum RMS values are recorded and stored (see *3.6 Minimum and maximum values*).

$$I_{RMS} = \sqrt{I_{f1}^{2} + I_{f2}^{2} + ... + I_{f15}^{2}}$$

RMS voltages

The relay calculates the RMS value of each voltage input. The minimum and the maximum of RMS values are recorded and stored (see *3.6 Minimum and maximum values*).

$$U_{RMS} = \sqrt{U_{f1}^{2} + U_{f2}^{2} + ... + U_{f15}^{2}}$$

3.4 Harmonics and total harmonic distortion (THD)

The relay calculates the the total harmonic distortions (THDs) as a percentage of the currents and voltages values measured at the fundamental frequency. The relay calculates the harmonics from the 2nd to the 15th of phase currents and voltages. (The 17th harmonic component is also shown partly in the value of the 15th harmonic component. This is due to the nature of digital sampling.)

The harmonic distortion is calculated:

Equation 1

$$THD = \frac{\sqrt{\sum_{i=2}^{15} f_i^2}}{h_1}$$

f_1 = Fundamental value

f_{2-15} = Harmonics

Example

f_1 = 100 A,	f_3 = 10 A,	f_7 = 3 A,	f_{11} = 8 A

$$THD = \frac{\sqrt{10^2 + 3^2 + 8^2}}{100} = 13.2\%$$

For reference, the RMS value is:

$$RMS = \sqrt{100^2 + 10^2 + 3^2 + 8^2} = 100.9A$$

Another way to calculate the THD is to use the RMS value as reference instead of the fundamental frequency value. In the example above, the result would then be 13.0 %.

3.5 Demand values

The device calculates average i.e. demand values of phase currents I_{L1}, I_{L2}, I_{L3} and power values S, P and Q.

The demand time is configurable from 10 to 60 minutes with the parameter "Demand time".

Figure 6 - Demand values

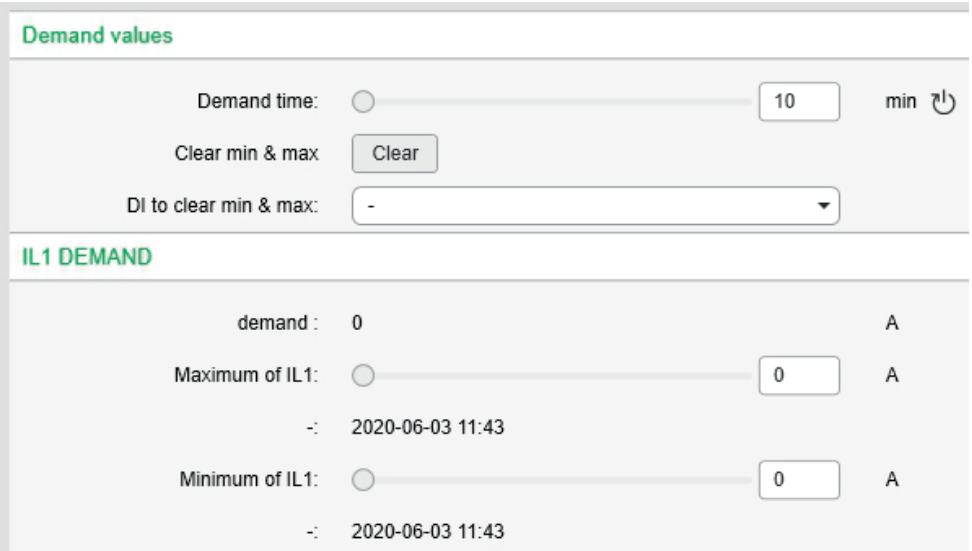

Table 28 - Demand value parameters

Parameter	Value	Unit	Description	Set[16)]
Time	10 – 30	min	Demand time (averaging time)	Set
Fundamental frequency values				
I_{L1}da		A	Demand of phase current I_{L1}	
I_{L2}da		A	Demand of phase current I_{L2}	
I_{L3}da		A	Demand of phase current I_{L3}	
Pda		kW	Demand of active power P	
PFda			Demand of power factor PF	
Qda		kvar	Demand of reactive power Q	
Sda		kVA	Demand of apparent power S	

Parameter	Value	Unit	Description	Set[16)]
RMS values				
I_{L1}RMSda		A	Demand of RMS phase current I_{L1}	
I_{L2}RMSda		A	Demand of RMS phase current I_{L2}	
I_{L3}RMSda		A	Demand of RMS phase current I_{L3}	
Prmsda		kW	Demand of RMS active power P	
Qrmsda		kvar	Demand of RMS reactive power Q	
Srmsda		kVA	Demand of RMS apparent power S	

[16)] Set = An editable parameter (password needed)

3.6 Minimum and maximum values

Minimum and maximum values are registered with time stamps since the latest manual clearing or since the relay has been restarted. The available registered values are listed in *Table 29*.

Figure 7 - Minimum and maximum values

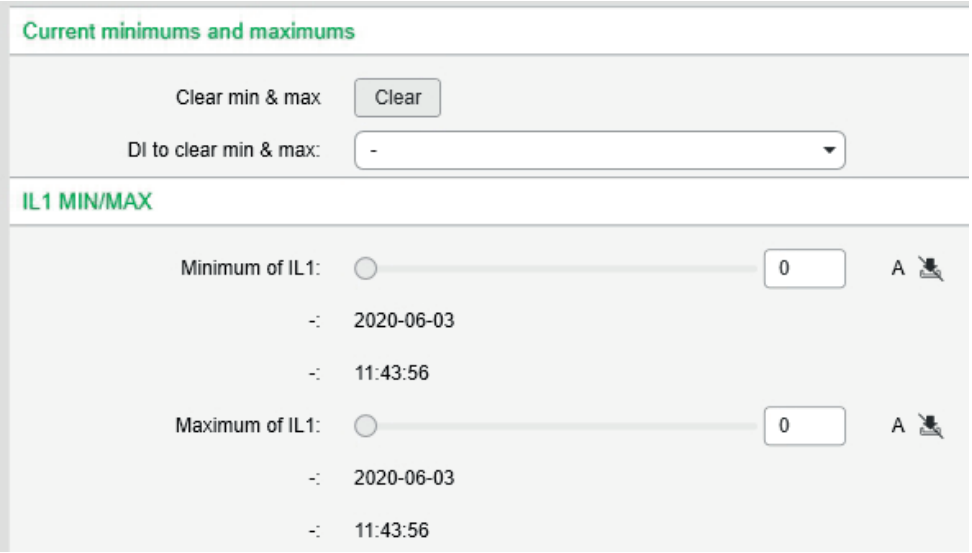

Table 29 - Minimum and maximum measurement values

Min & Max measurement	Description
I_{L1}, I_{L2}, I_{L3}	Phase current, fundamental frequency value
$I_{L1\ RMS}$, $I_{L2\ RMS}$, $I_{L3\ RMS}$	Phase current, RMS value
I_0	Earth fault overcurrent, fundamental value
U_A, U_B, U_C, U_D	Voltages, fundamental frequency values

Min & Max measurement	Description
U_ARMS, U_BRMS, U_CRMS, U_DRMS	Line-to-neutral voltages, RMS value
U_0	Neutral voltage displacement, fundamental value
f	Frequency
P, Q, S	Active, reactive, apparent power
IL1da, IL2da, ILda3	Demand values of phase currents
IL1da, IL2da, IL3da (rmsvalue)	Demand values of phase currents, rms values
PFda	Power factor demand value
P.F.	Power factor

The clearing parameter "ClrMax" is common for all these values.

Table 30 - Parameters

Parameter	Value	Description	Set[17)]
ClrMax	-; Clear	Reset all minimum and maximum values	Set

[17)] Set = An editable parameter (password needed).

3.7 Maximum values of the last 31 days and 12 months

The maximum and minimum values of the last 31 days and the last 12 months are stored in the relay's non-volatile memory. You can view them in the **Logs > Month max** setting view in eSetup Easergy Pro.

NOTE: The saving process starts every 30 minutes and it takes a while. If the relay's auxiliary supply power is switched off before all values have been saved, the old values remain for the unsaved ones.

Corresponding time stamps are stored for the last 31 days. The registered values are listed in *Table 31*.

Figure 8 - Maximum and minimum values of the past 31 days

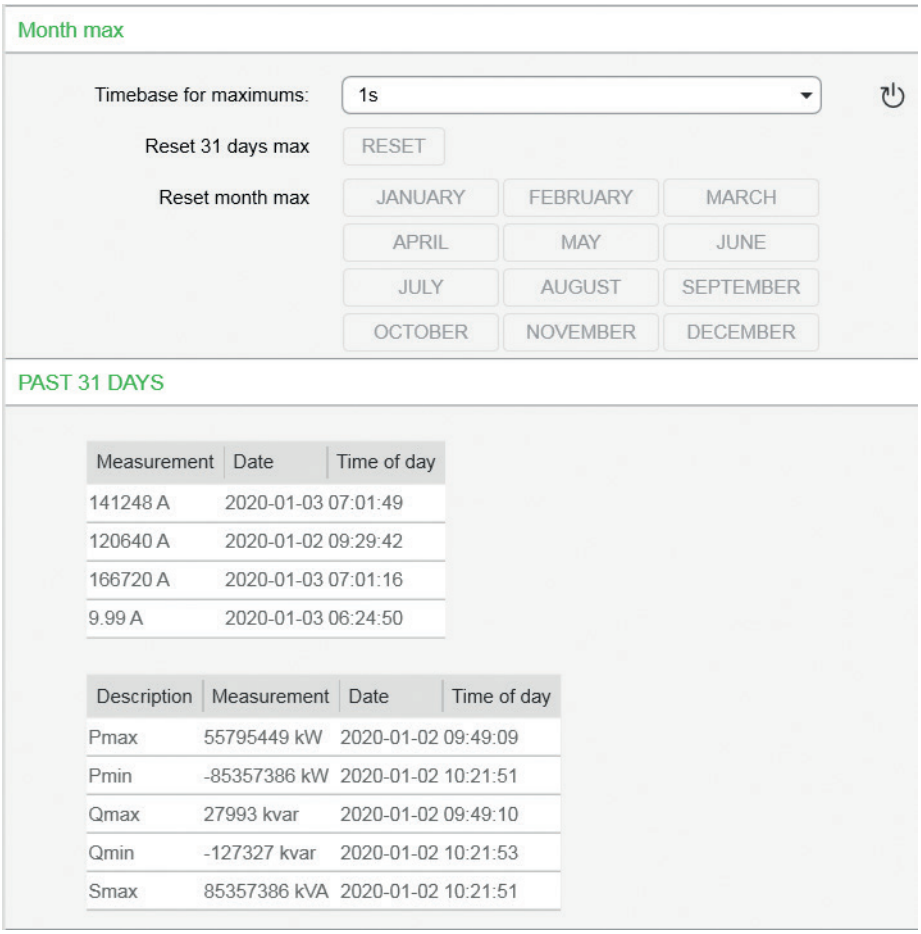

Measurement	Date	Time of day
141248 A	2020-01-03	07:01:49
120640 A	2020-01-02	09:29:42
166720 A	2020-01-03	07:01:16
9.99 A	2020-01-03	06:24:50

Description	Measurement	Date	Time of day
Pmax	55795449 kW	2020-01-02	09:49:09
Pmin	-85357386 kW	2020-01-02	10:21:51
Qmax	27993 kvar	2020-01-02	09:49:10
Qmin	-127327 kvar	2020-01-02	10:21:53
Smax	85357386 kVA	2020-01-02	10:21:51

Figure 9 - Maximum and minimum values of the past 12 months

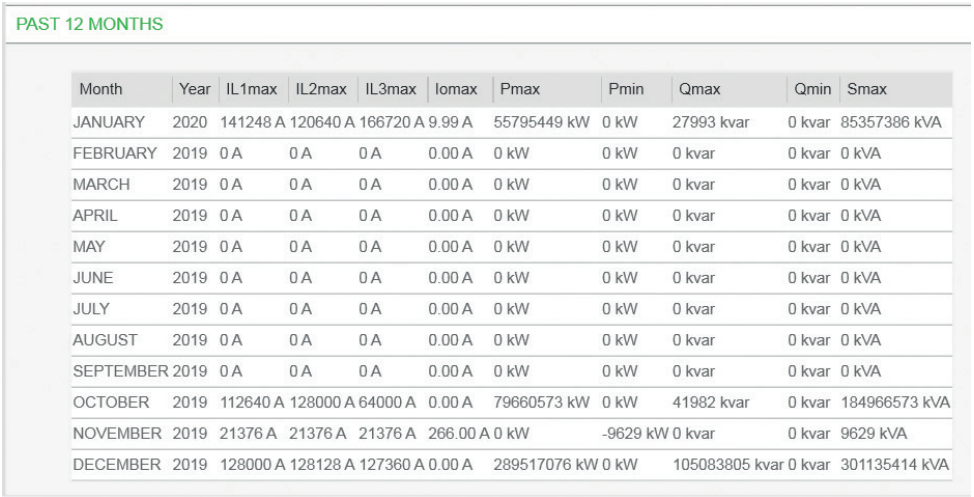

Month	Year	IL1max	IL2max	IL3max	Iomax	Pmax	Pmin	Qmax	Qmin	Smax
JANUARY	2020	141248 A	120640 A	166720 A	9.99 A	55795449 kW	0 kW	27993 kvar	0 kvar	85357386 kVA
FEBRUARY	2019	0 A	0 A	0 A	0.00 A	0 kW	0 kW	0 kvar	0 kvar	0 kVA
MARCH	2019	0 A	0 A	0 A	0.00 A	0 kW	0 kW	0 kvar	0 kvar	0 kVA
APRIL	2019	0 A	0 A	0 A	0.00 A	0 kW	0 kW	0 kvar	0 kvar	0 kVA
MAY	2019	0 A	0 A	0 A	0.00 A	0 kW	0 kW	0 kvar	0 kvar	0 kVA
JUNE	2019	0 A	0 A	0 A	0.00 A	0 kW	0 kW	0 kvar	0 kvar	0 kVA
JULY	2019	0 A	0 A	0 A	0.00 A	0 kW	0 kW	0 kvar	0 kvar	0 kVA
AUGUST	2019	0 A	0 A	0 A	0.00 A	0 kW	0 kW	0 kvar	0 kvar	0 kVA
SEPTEMBER	2019	0 A	0 A	0 A	0.00 A	0 kW	0 kW	0 kvar	0 kvar	0 kVA
OCTOBER	2019	112640 A	128000 A	64000 A	0.00 A	79660573 kW	0 kW	41982 kvar	0 kvar	184966573 kVA
NOVEMBER	2019	21376 A	21376 A	21376 A	266.00 A	0 kW	-9629 kW	0 kvar	0 kvar	9629 kVA
DECEMBER	2019	128000 A	128128 A	127360 A	0.00 A	289517076 kW	0 kW	105083805 kvar	0 kvar	301135414 kVA

Table 31 - Maximum registered values of the last 31 days and 12 months

12 months Measurement	Max	Min	Description	31 days	12 months
I_{L1}, I_{L2}, I_{L3}	X		Phase current (fundamental frequency value)		
I_0	X		Earth fault overcurrent		
S	X		Apparent power	X	X
P	X	X	Active power	X	X
Q	X	X	Reactive power	X	X

The timebase can be a value from one cycle to one minute. Also a demand value can be used as the timebase and its value can be set between 10 and 60 minutes. The demand value menu is located under the **Measurements** view.

Table 32 - Parameters of the day and month registers

Parameter	Value	Description	Set[18)]
Timebase		Parameter to select the type of the registered values	Set
	20 ms	Collect min & max of one cycle values[19)]	
	200 ms	Collect min & max of 200 ms average values	
	1 s	Collect min & max of 1 s average values	
	1 min	Collect min & max of 1 minute average values	
	demand	Collect min & max of demand values (*3.5 Demand values*)	

Parameter	Value	Description	Set[18)]
ResetDays		Reset the 31 day registers	Set
ResetMon		Reset the 12 month registers	Set

18) Set = An editable parameter (password needed)
19) This is the fundamental frequency RMS value of one cycle updated every 20 ms.

3.8 Memory management of measurements

Table 33 - Memory management of measured and recorded values

Measurement	Online	Non-volatile[20)]	Non-volatile[21)]
RMS phase current	x		
RMS earth fault overcurrent	x		
RMS line-to-line voltage	x		
RMS phase-to-neutral voltage	x		
RMS active power	x		
RMS reactive power	x		
RMS apparent power	x		
Frequency	x		
Fundamental frequency current values	x		
Fundamental frequency voltage values	x		
Fundamental frequency active, reactive and apparent power values	x		
Fundamental frequency active power values	x		
Fundamental frequency reactive power values	x		
Power factor	x		
Active energy		x	
Reactive energy		x	
Energy transmitted with pulse outputs		x	
Demand values: phase currents		x	
Active power demand		x	

Measurement	Online	Non-volatile[20)]	Non-volatile[21)]
Reactive power demand		x	
Apparent power demand		x	
Power factor demand		x	
Min. and max. demand values: phase currents		x	
Min. and max. demand values: RMS phase currents		x	
Min. and max. demand values: active, reactive, apparent power and power factor		x	
Max. demand values over the last 31 days and 12 months: active, reactive, apparent power			x
Min. demand values over the last 31 days and 12 months: active, reactive power			x
Max. and min. values: currents			x
Max. and min. values: voltages			x
Max. and min. values: frequency			x
Max. and min. values: active, reactive, apparent power and power factor			x
Harmonic values of phase current and THD		x	
Harmonic values of voltage and THD		x	
Voltage sags and swells		x	
Engine running counter		x	
Events		x	
Disturbance record		x	
Protection stage fault values and events		x	

[20)] Capacitor-backed-up for 5-10 days
[21)] FLASH

3.9 Power and current direction

Figure 10 shows the concept of three-phase current direction and sign of cosφ and power factor PF (the absolute value is equal to cosφ, but the sign is 'IND' for

inductive i.e. lagging current and 'CAP' for capacitive i.e. leading current). *Figure 11* shows the same concepts on a PQ power plane.

Figure 10 - Quadrants of voltage/current phasor plane

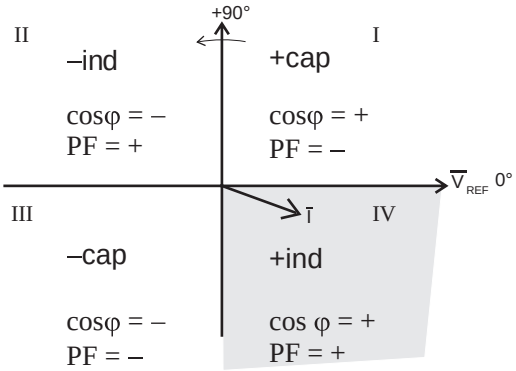

I:	Forward capacitive power, current is leading
II:	Reverse inductive power, current is leading
III:	Reverse capacitive power, current is lagging
IV:	Forward inductive power, current is lagging

Figure 11 - Quadrants of power plane

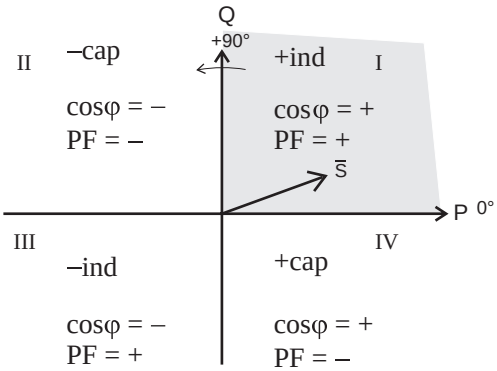

I:	Forward inductive power, current is lagging
II:	Reverse capacitive power, current is lagging
III:	Reverse inductive power, current is leading
IV:	Forward capacitive power, current is leading

Table 34 - Power quadrants

Power quadrant	Current related to voltage	Power direction	cosφ	Power factor PF
+ inductive	Lagging	Forward	+	+
+ capacitive	Leading	Forward	+	-
- inductive	Leading	Reverse	-	+
- capacitive	Lagging	Reverse	-	-

3.10 Symmetrical components

In a three-phase system, the voltage or current phasors may be divided into symmetrical components.

- Positive sequence 1
- Negative sequence 2
- Zero sequence 0

Symmetrical components are calculated according to the following equations:

$$\begin{bmatrix} \underline{S}_0 \\ \underline{S}_1 \\ \underline{S}_2 \end{bmatrix} = \frac{1}{3} \begin{bmatrix} 1 & 1 & 1 \\ 1 & \underline{a} & \underline{a}^2 \\ 1 & \underline{a}^2 & \underline{a} \end{bmatrix} \begin{bmatrix} \underline{S}_A \\ \underline{S}_B \\ \underline{S}_C \end{bmatrix}$$

$\underline{S}_0$ = zero sequence component

$\underline{S}_1$ = positive sequence component

$\underline{S}_2$ = negative sequence component

$$\underline{a} = 1\angle 120° = -\frac{1}{2} + j\frac{\sqrt{3}}{2}$$

, a phase rotating constant

$\underline{S}_A$ = phasor of phase L1 (phase current or voltage)

$\underline{S}_B$ = phasor of phase L2

$\underline{S}_C$ = phasor of phase L3

4 Control functions

4.1 Digital outputs

The digital outputs are also called controlling outputs, signaling outputs and self-supervision outputs. Trip contacts can be controlled by using the relay output matrix or logic functions. Also forced control is possible. To use forced control, you must enable it in the **Device/Test > Relays** setting view.

The digital outputs can be set to normal or reverse position with eSetup Easergy Pro and Web HMI by selecting "NO" or "NC" in the **Relays Polarity** view of **Device/Test menu**. As the relay polarity parameter is set to “NC”, the relay position will be set reverse.

Any internal signal can be connected to the digital outputs in the **Matrix > Output matrix** setting view. A digital output can be configured as latched or non-latched.

The digital output connections are configured either through the eSetup Easergy Pro setting tool or the relay's menus. Horizontal lines represent inputs and vertical lines represent outputs. When the crossing line of the horizontal input signal and vertical output line is touched, the connection changes in the following sequence:

The position of the contact can be checked in the **Output matrix** and **Relays** setting views. A digital output can be configured as latched or non-latched. Latched relay contacts can be set free by pressing the “enter” key of the relay or by releasing from the eSetup Easergy Pro setting tool.

The difference between trip contacts and signal contacts is the DC breaking capacity. The contacts are **single pole single throw (SPST)** normal open (NO) type, except signal relay A1 which has a changeover contact **single pole double throw (SPDT)**.

Programming matrix

1. Connected (single bullet)
2. Connected and latched (single bullet rounded with another circle)
3. Not connected (line crossing is empty)

Trip contacts can be connected to protection stages or other similar purpose in the **Output matrix** setting view.

Figure 12 - **Output matrix** view

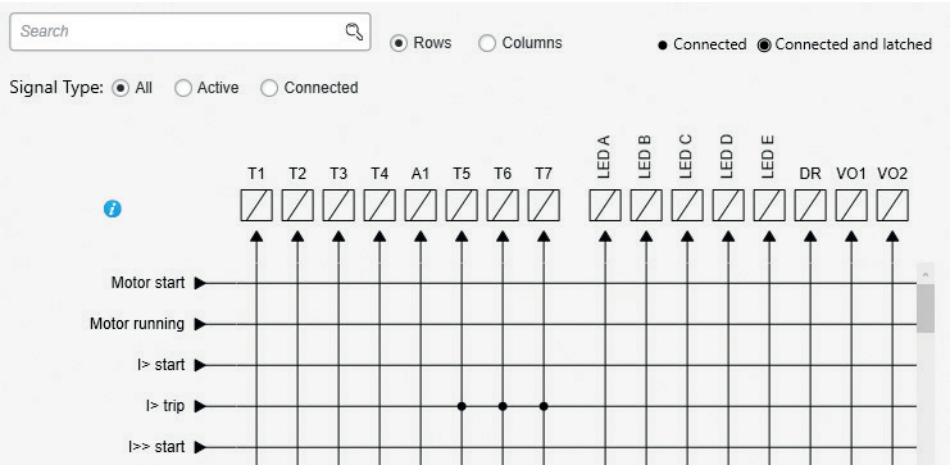

Figure 13 - Trip contacts assigned directly to outputs of logical operators

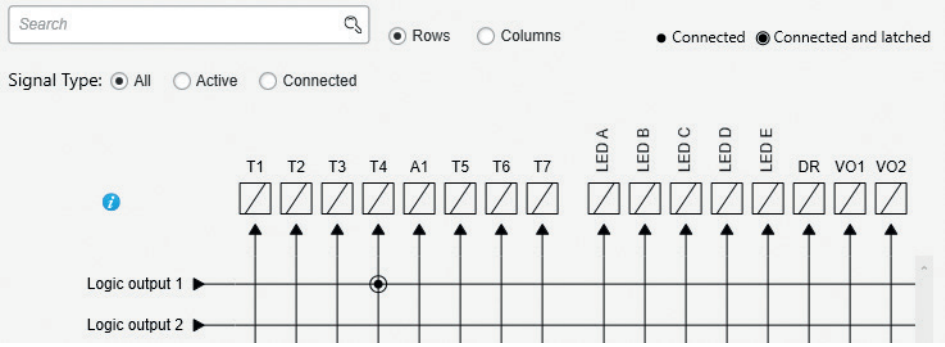

NOTE: Logic outputs are assigned automatically in the output matrix as well when logic is built.

Trip contact status can be viewed and forced to operate in the **Relays** setting view.

Figure 14 - **Relays** view

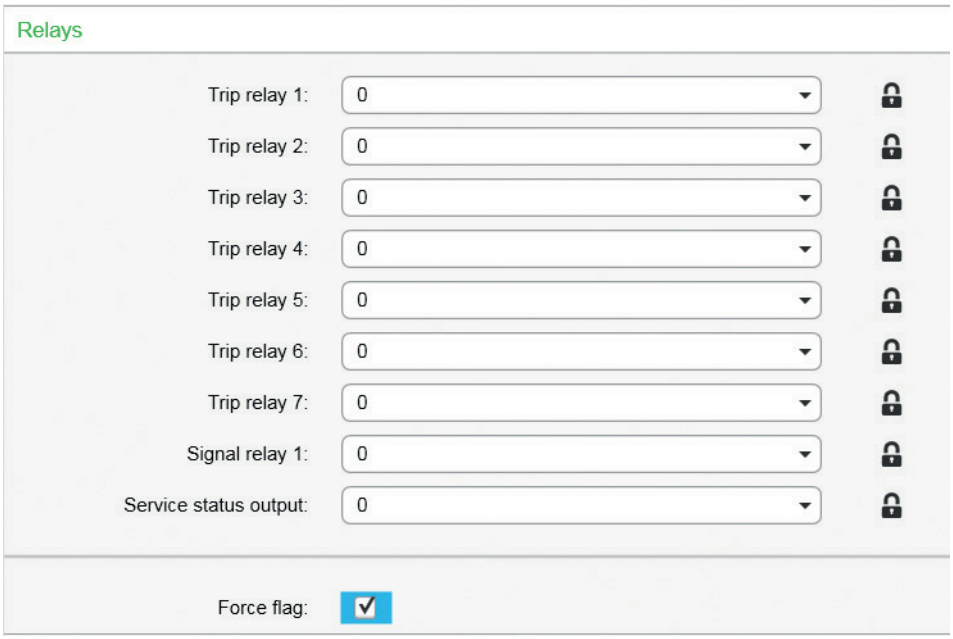

Power supply card outputs are not visible in the **Relay config** setting view.

Table 35 - Parameters of digital outputs

Parameter	Value	Unit	Description	Note
T1 – T7	0 1		Status of trip controlling output	F[22)]
A1	0 1		Status of alarm signalling output	F
SF	0 1		Status of the SF relay In eSetup Easergy Pro, it is called "Service status output"	F
Force	On Off		Force flag for digital output forcing for test purposes	Set[23)]
Names for output relays (editable with eSetup Easergy Pro only)				
Description	String of max. 32 characte rs		Names for DO on eSetup Easergy Pro screens. Default is	Set

[22)] F = Editable when force flag is on
[23)] Set = An editable parameter (password needed).

4.2 Digital inputs

Digital inputs are available for control purposes.

The polarity normal open (NO) / normal closed (NC) and a delay can be configured according to the application by using the front panel or eSetup Easergy Pro.

Digital inputs can be used in many operations. The status of the input can be checked in the **Output matrix** and **Digital inputs** setting views. The digital inputs make it possible to change group, block/enable/disable functions, to program logics, indicate object status, etc.

The digital inputs require an external control voltage (ac or dc). The digital inputs are activated after the activation voltage is exceeded. Deactivation follows when the voltage drops below threshold limit.

Digital inputs can be connected, latched or unlatched to trip contacts or other similar purpose in **Output matrix** setting view.

Figure 15 - **Output matrix** view

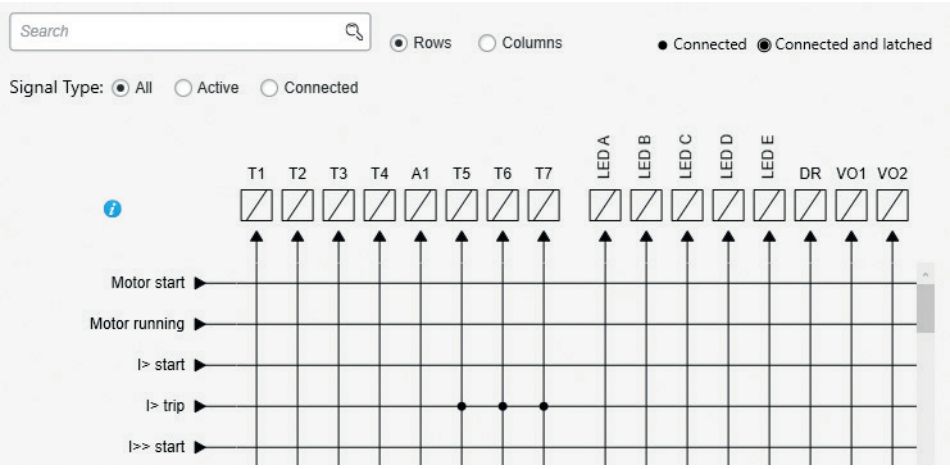

Digital inputs can be assigned, latched or unlatched directly to inputs/outputs of logical operators.

Figure 16 - Digital inputs assigned to outputs of logical operators

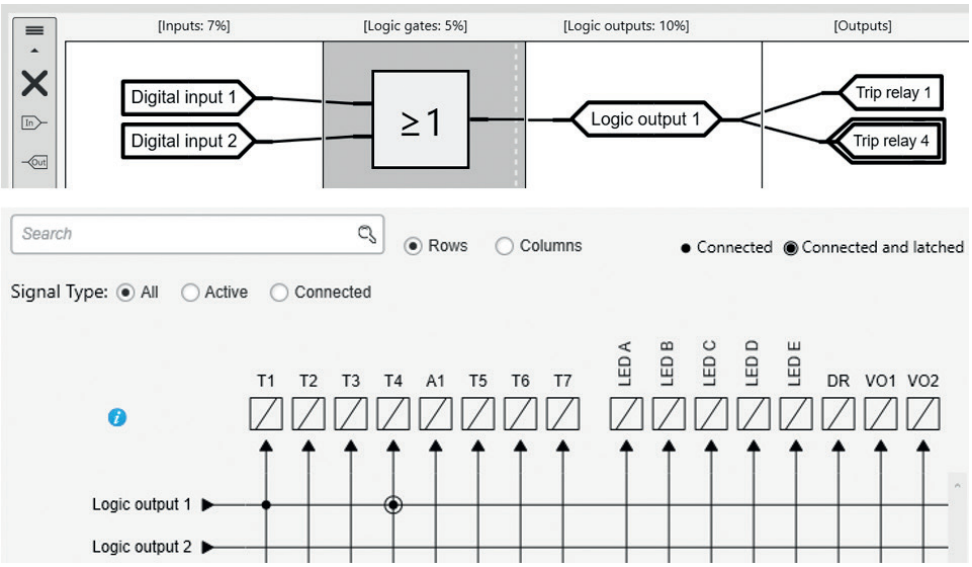

Digital inputs can be viewed, named and changed between NO/NC in the **Digital inputs** and **Names for digital inputs** setting views.

Figure 17 - **Names for digital inputs** view

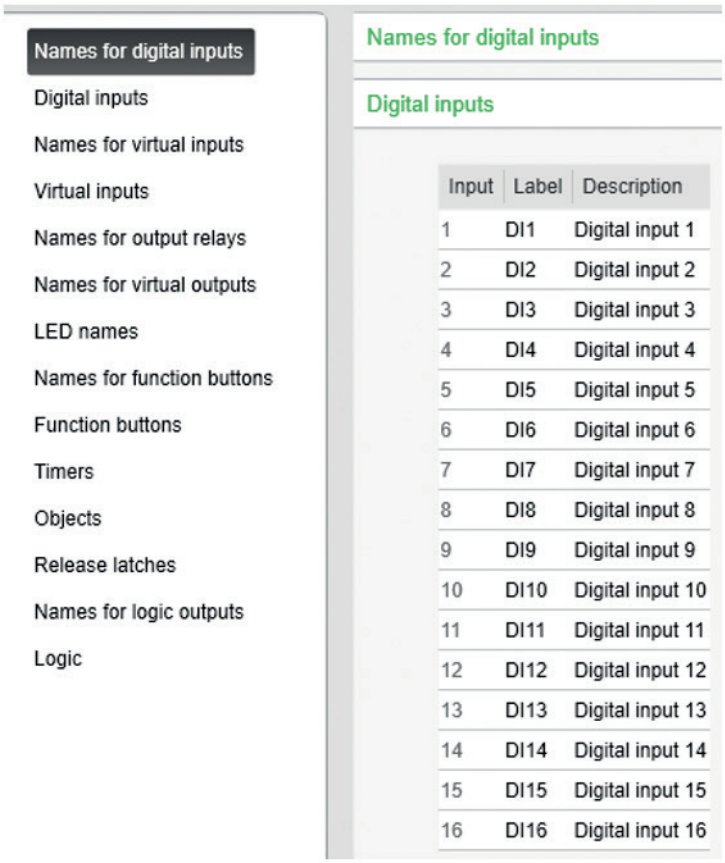

Input	Label	Description
1	DI1	Digital input 1
2	DI2	Digital input 2
3	DI3	Digital input 3
4	DI4	Digital input 4
5	DI5	Digital input 5
6	DI6	Digital input 6
7	DI7	Digital input 7
8	DI8	Digital input 8
9	DI9	Digital input 9
10	DI10	Digital input 10
11	DI11	Digital input 11
12	DI12	Digital input 12
13	DI13	Digital input 13
14	DI14	Digital input 14
15	DI15	Digital input 15
16	DI16	Digital input 16

Figure 18 - **Digital inputs** view

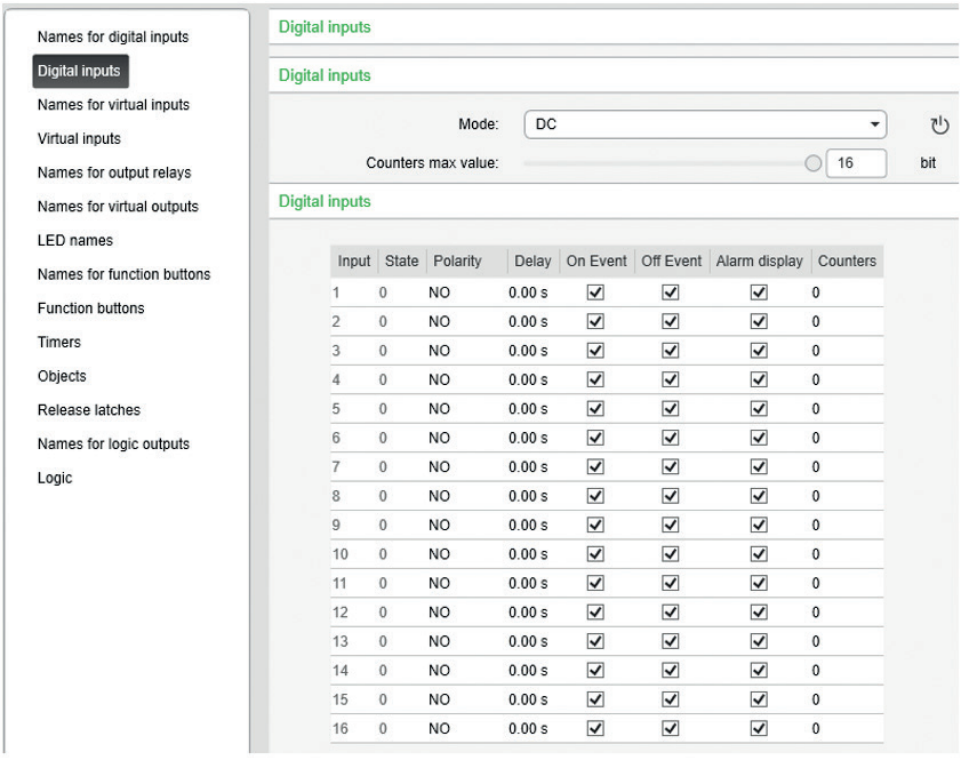

Input	State	Polarity	Delay	On Event	Off Event	Alarm display	Counters
1	0	NO	0.00 s	☑	☑	☑	0
2	0	NO	0.00 s	☑	☑	☑	0
3	0	NO	0.00 s	☑	☑	☑	0
4	0	NO	0.00 s	☑	☑	☑	0
5	0	NO	0.00 s	☑	☑	☑	0
6	0	NO	0.00 s	☑	☑	☑	0
7	0	NO	0.00 s	☑	☑	☑	0
8	0	NO	0.00 s	☑	☑	☑	0
9	0	NO	0.00 s	☑	☑	☑	0
10	0	NO	0.00 s	☑	☑	☑	0
11	0	NO	0.00 s	☑	☑	☑	0
12	0	NO	0.00 s	☑	☑	☑	0
13	0	NO	0.00 s	☑	☑	☑	0
14	0	NO	0.00 s	☑	☑	☑	0
15	0	NO	0.00 s	☑	☑	☑	0
16	0	NO	0.00 s	☑	☑	☑	0

If inputs are energized by using ac voltage, “mode” has to be selected as ac.

All essential information on digital inputs can be found in the same location in the **Digital inputs** setting view. DI on/off events and alarm display (pop-up) can be enabled and disabled in **Digital inputs** setting view. Individual operation counters are located in the same view as well.

Label and description texts can be edited with eSetup Easergy Pro according to the demand. Labels are the short parameter names used on the local panel and descriptions are the longer names used by eSetup Easergy Pro.

Digital input delay determines the activation and de-activation delay for the input. *Figure 19*shows how the digital input behaves when the delay is set to 1 second.

Figure 19 - Digital input’s behavior when delay is set to 1 second

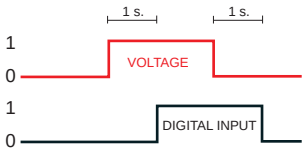

Table 36 - Parameters of digital inputs

Parameter	Value	Unit	Description	Note
Mode	dc, ac		Used voltage of digital inputs	Set[24)]
Input	DI1 – DI16		Number of digital input.	
State	0, 1		Status of digital input 1 – digital input x.	
Polarity	NO NC		For normal open contacts (NO). Active edge is 0 > 1 For normal closed contacts (NC) Active edge is 1 > 0	Set
Delay	0.00 – 60.00	s	Definite delay for both on and off transitions	Set
On event	On		Active edge event enabled	Set
	Off		Active edge event disabled	

Parameter	Value	Unit	Description	Note
Off event	On		Inactive edge event enabled	Set
	Off		Inactive edge event disabled	
Alarm display	no		No pop-up display	Set
	yes		Alarm pop-up display is activated at active DI edge	
Counters	0 – 65535		Cumulative active edge counter	(Set)
NAMES for DIGITAL INPUTS (editable with eSetup Easergy Pro only)				
Label	String of max. 10 characters		Short name for DIs on the local display Default is "DI1 – DIx". x is the maximum number of the digital input.	Set
Description	String of max. 32 characters		Long name for DIs. Default is "Digital input 1 – Digital input x". x is the maximum number of the digital input.	Set

[24)] Set = An editable parameter (password needed).

4.3 Virtual inputs and outputs

There are virtual inputs and virtual outputs that can in many places be used like their hardware equivalents except that they are located in the memory of the relay. The virtual inputs act like normal digital inputs. The status of the virtual input can be changed via the local display, communication bus and eSetup Easergy Pro. For example setting groups can be changed using virtual inputs.

Virtual inputs can be used in many operations. The status of the input can be checked in the **Matrix > Output matrix** and **Control > Virtual inputs** setting views. The status is also visible on local mimic display, if so selected. Virtual inputs can be selected to be operated with the function buttons F1 and F2, the

local mimic or simply by using the virtual input menu. Virtual inputs have similar functions as digital inputs: they enable changing groups, block/enable/disable functions, to program logics and other similar to digital inputs.

The activation and reset delay of the input is approximately 5 ms.

Table 37 - Virtual inputs and outputs

Number of inputs	20
Number of outputs	20
Activation time / Reset time	< 5 ms

Virtual inputs and outputs can be used for many purposes in the **Output matrix** setting view.

Figure 20 - Virtual inputs and outputs in **Output matrix** view

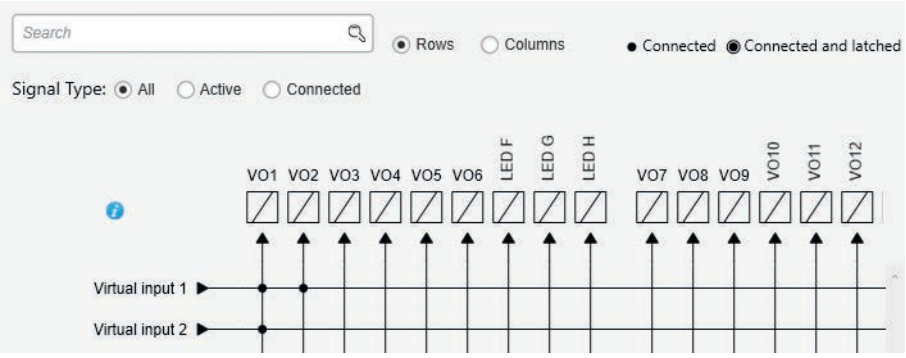

Virtual inputs and outputs can be assigned, latched or unlatched, directly to inputs/outputs of logical operators.

Figure 21 - Virtual inputs and outputs assigned to outputs of logical operators

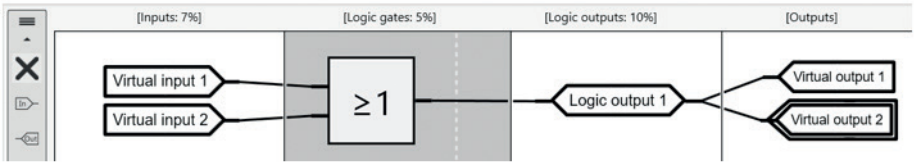

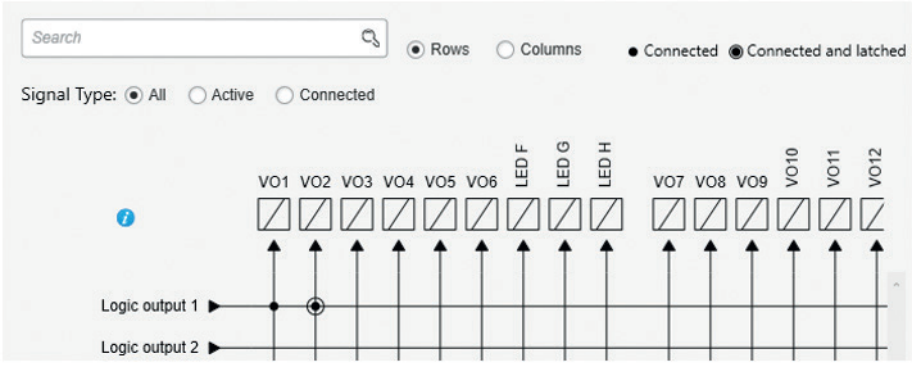

Virtual inputs

The virtual inputs can be viewed, named and controlled in the **Control > Virtual inputs** setting view.

Figure 22 - Configurable virtual inputs and non-configurable virtual inputs

Virtual inputs

Configurable VIs

VI no	State	Pulse Length(0=infinite)
1	0	10.0 s
2	0	0.0 s
3	0	0.0 s
4	0	0.0 s
5	0	0.0 s
6	0	0.0 s
7	0	0.0 s
8	0	0.0 s
9	0	0.0 s
10	0	0.0 s

Non-configurable VIs

Virtual input 11:	0
Virtual input 12:	0
Virtual input 13:	0
Virtual input 14:	0
Virtual input 15:	0
Virtual input 16:	0
Virtual input 17:	0
Virtual input 18:	0
Virtual input 19:	0
Virtual input 20:	0

Figure 23 - **Names for virtual inputs** view

Names for virtual inputs

Virtual inputs

Input	Label	Description
1	VI1	Virtual input 1
2	VI2	Virtual input 2
3	VI3	Virtual input 3
4	VI4	Virtual input 4
5	VI5	Virtual input 5
6	VI6	Virtual input 6
7	VI7	Virtual input 7
8	VI8	Virtual input 8
9	VI9	Virtual input 9
10	VI10	Virtual input 10
11	VI11	Virtual input 11
12	VI12	Virtual input 12
13	VI13	Virtual input 13
14	VI14	Virtual input 14
15	VI15	Virtual input 15
16	VI16	Virtual input 16
17	VI17	Virtual input 17
18	VI18	Virtual input 18
19	VI19	Virtual input 19
20	VI20	Virtual input 20

Table 38 - Parameters of virtual inputs

Parameter	Value	Unit	Description	Set[25)]
VI1-VI20	0 1		Status of virtual input	
Events	On Off		Event enabling	Set
Names for virtual inputs (editable with eSetup Easergy Pro only)				
Label	String of max. 10 characters		Short name for VIs on the local display Default is "VIn", n = 1–20	Set
Description	String of max. 32 characters		Long name for VIs. Default is "Virtual input n", n = 1–20	Set

[25)] Set = An editable parameter (password needed).

Virtual input pulse time operation

VI1 to VI10 are configurable virtual inputs. They can operate on pulse mode, which is achieved by a settable VI pulse length. When the VI pulse length is set to "0 = infinite", it keeps actual operation; and with any setting >0 s, the VI state gets automatically reset to 0 (low/ inactive), once the pulse timer expires.

Figure 24 - Layout of VI pulse time

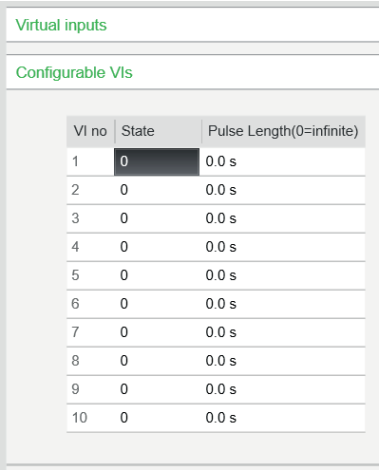

NOTE: The configurable VIs state is cleared once the power supply is lost when the timer is still counting down.

Table 39 - Characteristics of virtual inputs pulse length

Input	Pulse length
Setting range	0.0-600.0 s
Inaccuracy	Pulse length <100 ms
Configurable VI number	10

Virtual outputs

In eSetup Easergy Pro, the **Virtual outputs** setting view is located under **Control**.

Figure 25 - **Virtual outputs** view

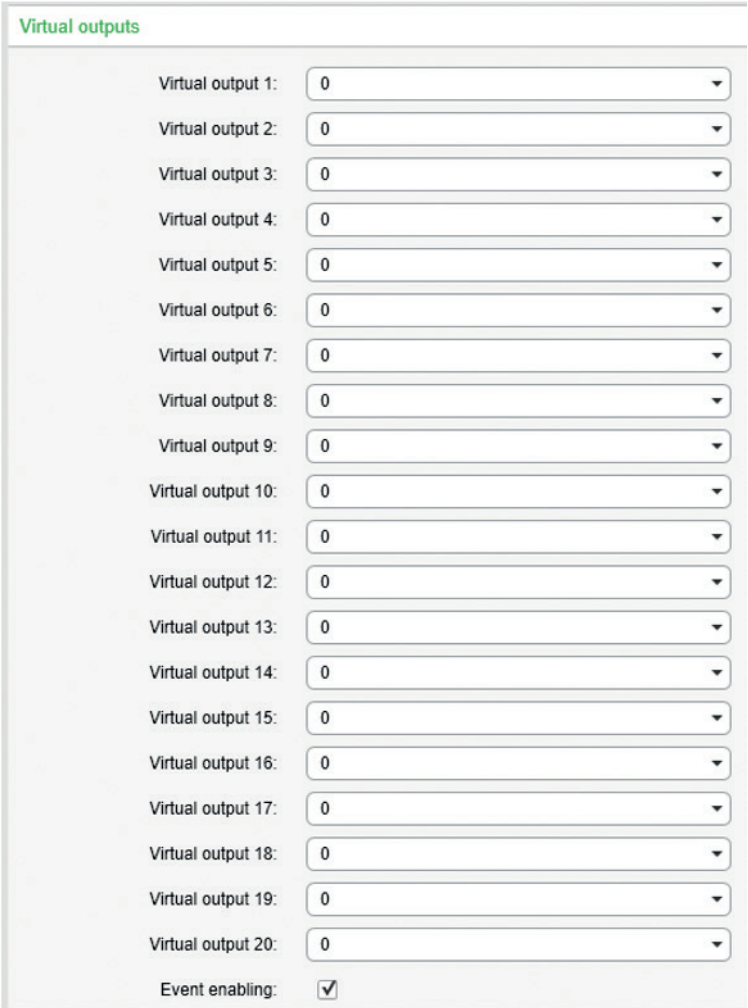

Figure 26 - **Names for virtual outputs** view

Names for virtual outputs

Virtual outputs

Input	Label	Description
1	VO1	Virtual output 1
2	VO2	Virtual output 2
3	VO3	Virtual output 3
4	VO4	Virtual output 4
5	VO5	Virtual output 5
6	VO6	Virtual output 6
7	VO7	Virtual output 7
8	VO8	Virtual output 8
9	VO9	Virtual output 9
10	VO10	Virtual output 10
11	VO11	Virtual output 11
12	VO12	Virtual output 12
13	VO13	Virtual output 13
14	VO14	Virtual output 14
15	VO15	Virtual output 15
16	VO16	Virtual output 16
17	VO17	Virtual output 17
18	VO18	Virtual output 18
19	VO19	Virtual output 19
20	VO20	Virtual output 20

Table 40 - Parameters of virtual outputs

Parameter	**Value**	**Unit**	**Description**	**Set[26)]**
VO1-VO20	0 1		Status of virtual output	F
Events	On Off		Event enabling	Set
NAMES for VIRTUAL OUTPUTS (editable with eSetup Easergy Pro only)				
Label	String of max. 10 characte rs		Short name for VOs on the local display Default is "VOn", n=1-20	Set
Description	String of max. 32 characte rs		Long name for VOs. Default is "Virtual output n", n=1-20	Set

[26)] Set = An editable parameter (password needed). F = Editable when force flag is on.

4.4 Matrix

The relay has several matrices that are used for configuring the relay:

- **Output matrix** used to link protection stage signals, digital inputs, virtual inputs, function buttons, object control, logic output, relay's internal alarms, GOOSE signals and release latch signals to outputs, disturbance recorder trig input and virtual outputs
- **Block matrix** used to block protection stages
- **Object block matrix** used to inhibit object control
- **Auto-recloser matrix** used to control auto-recloser
- **Arc matrix** used to control current and light signals to arc stages and arc stages to the high-speed outputs

Figure 27 - Blocking matrix and output matrix

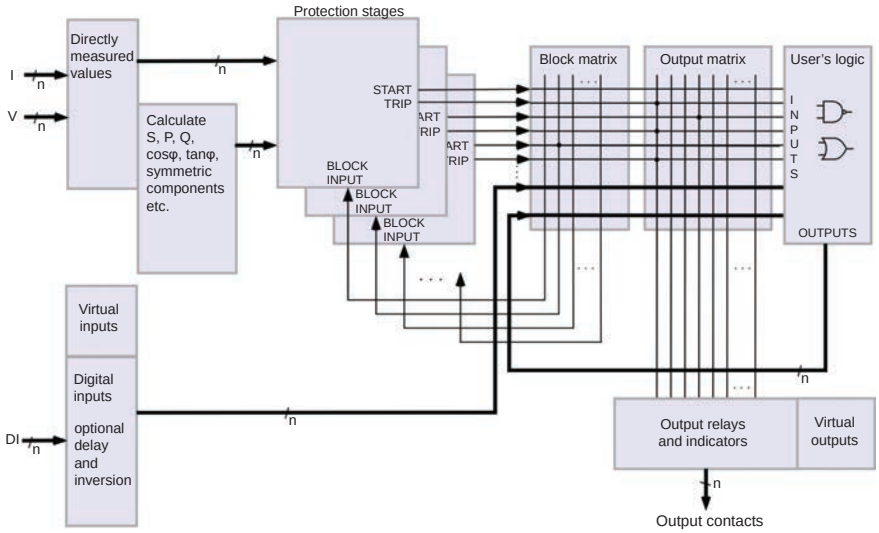

4.4.1 Output matrix

With the output matrix, the output signals of the various protection stages, digital inputs, logic outputs and other internal signals can be connected to the digital outputs, virtual outputs and so on.

LED A is specially used to indicate trip condition. There are general-purpose LED indicators – "B", "C" to ”H” – available for customer-specific indications on the front panel. Their usage is to define in a separate output matrix.

There are two LED indicators specified for keys F1 and F2. The triggering of the disturbance recorder (DR) and virtual outputs are configurable in the output matrix.

A digital output or indicator LED can be configured as latched or non-latched. A non-latched relay follows the controlling signal. A latched relay remains activated although the controlling signal releases.

There is a common "release all latches" signal to release all the latched relays. This release signal resets all the latched digital outputs and indicators. The reset signal can be given via a digital input, via front panel or remotely through

communication. For instructions on how to release latches, see *4.5 Releasing latches*.

Trip and alarm relays together with virtual outputs can be assigned in the output matrix. Also automatic triggering of disturbance recorder is done in the output matrix.

Figure 28 - **Output matrix** example view

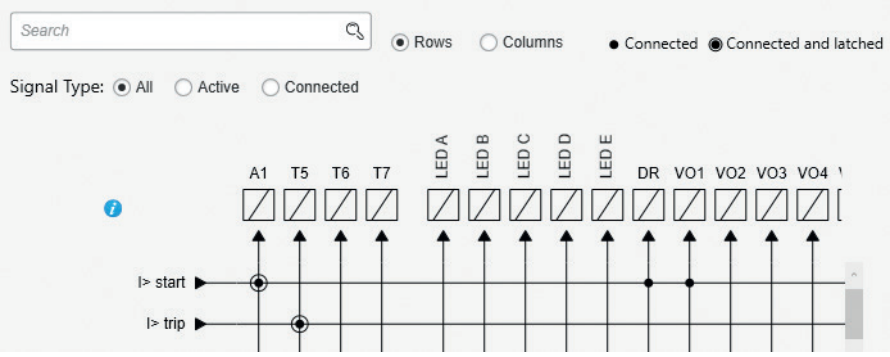

4.4.2 Blocking matrix

By means of a blocking matrix, the operation of any protection stage can be blocked. The blocking signal can originate from the digital inputs or it can be a start or trip signal from a protection stage or an output signal from the user's programmable logic. In *Figure 29* , an active blocking is indicated with a black dot (●) in the crossing point of a blocking signal and the signal to be blocked.

All protection stages can be blocked in the block matrix

Figure 29 - **Block matrix** view

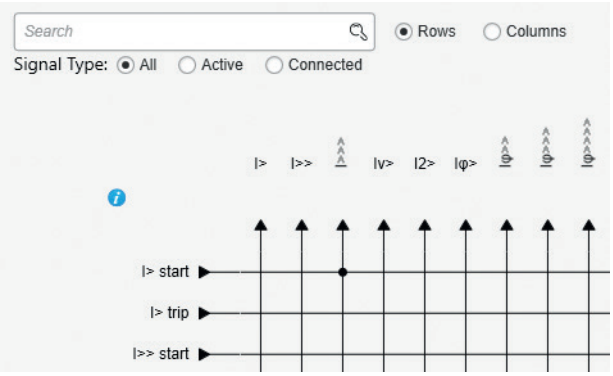

The Blocked status becomes visible only when the stage is about to activate.

Figure 30 - DI input blocking connection

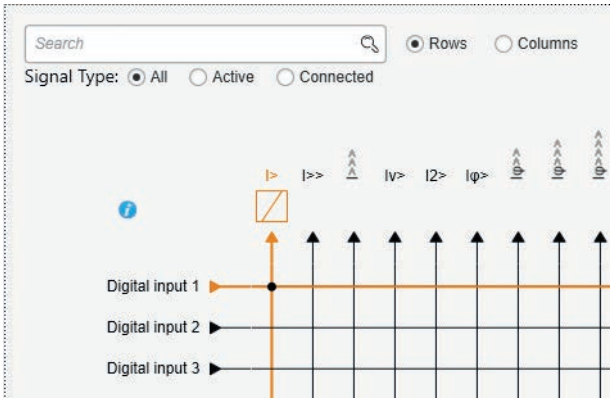

Figure 31 - Result for the I> stage when the DI is active and the stage exceeds its current start value

NOTICE
RISK OF NUISANCE TRIPPING Activate the protection stages first, then store the settings in a relay. After that, refresh the blocking matrix before configuring it. **Failure to follow these instructions can result in unwanted shutdown of the electrical installation.**

NOTE: The blocking matrix is dynamically controlled by selecting and deselecting protection stages.

4.4.3 Object block matrix

The object block matrix is used to link digital inputs, virtual inputs, function buttons, protection stage outputs, logic outputs, alarm signals and GOOSE signals to inhibit the control of objects, that is, circuit breakers, isolators and earthing switches.

Typical signals to inhibit controlling of the objects like circuit breaker are:

- protection stage activation
- statuses of other objects

- interlocking made with logic
- GOOSE signals

These and other signals are linked to objects in the object block matrix.

There are also event-type signals that do not block objects as they are on only for a short time, for example "Object1" open and "Object1 close" signals.

4.4.4 Auto-recloser matrix

The auto-recloser matrix is used to link digital inputs, virtual inputs, protection stage outputs, object statuses, logic outputs, alarm signals and GOOSE signals to control the auto-recloser. For more information, see *5.37 Auto-recloser function (ANSI 79)*.

4.5 Releasing latches

You can release latches using:
- eSetup Easergy Pro
- buttons and local panel display
- F1 or F2 buttons

4.5.1 Releasing latches using eSetup Easergy Pro

1. Connect eSetup Easergy Pro to the device.
2. From the eSetup Easergy Pro toolbar, select **Device** > **Release all latches**.

   Figure 32 - Releasing all latches

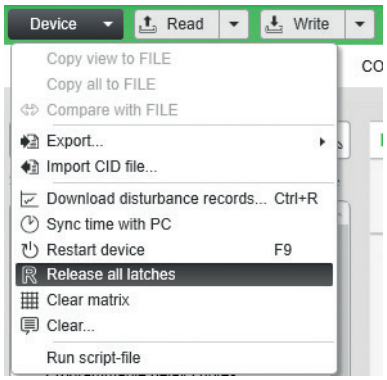

   Alternatively, go to **Control** > **Release latches**, and click the **Release** button.

Figure 33 - Release latches

4.5.2 Releasing latches using buttons and local panel display

Prerequisite: You have entered the correct password

1. Press .
2. Press .
3. Select **Release**, and press OK.
   All latches are released.

4.5.3 Releasing latches using F1 or F2 buttons

You can use the function buttons F1 or F2 to release all latches after configuring this function in eSetup Easergy Pro.

- To configure F1 to release latches:
  a. In eSetup Easergy Pro, go to **Control** > **Function buttons**.
  b. For F1, select **F1** from the **Selected control** drop-down menu.

     Figure 34 - **Function buttons** view

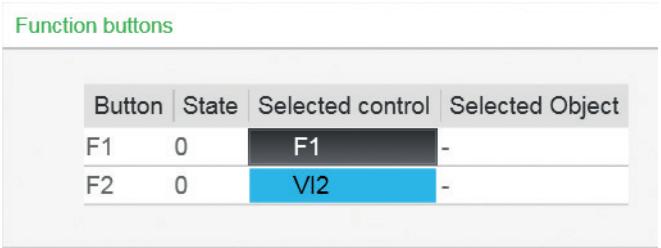

  c. Go to **Control** > **Release latches**.
  d. Select F1 from the **DI to release latches** drop-down menu.
  e. Set 1 s delay for **Latch release signal pulse**.

Figure 35 - **Release latches** view

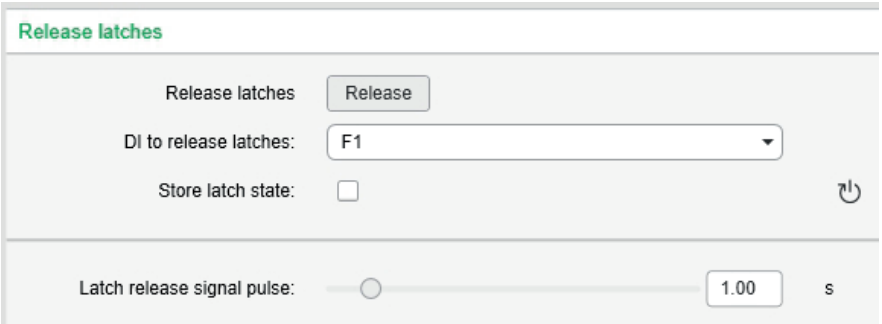

After this, pressing the F1 button on the relay's front panel releases all latches.

NOTE: The latch release signal can be activated only if the latched output is active.

4.6 Controllable objects

The relay allows controlling eight objects, that is, circuit breakers, disconnectors and earthing switches by the "select before operate" or "direct control" principle.

Controlling is possible in the following ways:

- through the object control buttons
- through front panel and display using single-line diagram
- through the function keys
- through digital input
- through remote communication
- through eSetup Easergy Pro setting tool
- through Web server
- through Smart APP

The connection of an object to specific controlling outputs is done via an output matrix (object 1–8 open output, object 1–8 close output). There is also an output signal "Object failed" that is activated if the control of an object is not completed.

Object states

Each object has the following states:

Setting	Value	Description
Object state	Undefined (00)	Actual state of the object
	Open	
	Close	
	Undefined (11)	

Basic settings for objects

Each object has the following settings:

Setting	Value	Description
DI for ‘obj open’	None, any digital input, virtual input or virtual output	Open information
DI for ‘obj close’		Close information
DI for ‘obj ready’		Ready information
Max ctrl pulse length	0.02–600 s	Pulse length for open and close commands. Control pulse stops once object changes its state
Completion timeout	0.02–600 s	Timeout of ready indication
Object control	Open/Close	Direct object control

If changing the states takes longer than the time defined by the “Max ctrl pulse length” setting, the object is inoperative and the “Object failure” matrix signal is set. Also, an undefined event is generated. “Completion timeout” is only used for the ready indication. If “DI for ‘obj ready’” is not set, the completion timeout has no meaning.

Output signals of objects

Each object has two control signals in matrix:

Output signal	Description
Object x Open	Open control signal for the object
Object x Close	Close control signal for the object

These signals send control pulse when an object is controlled by digital input, remote bus, auto-reclose etc.

4.6.1 Object control with digital inputs

Objects can be controlled with digital inputs, virtual inputs or virtual outputs. There are four settings for each object:

Setting	Active
DI for remote open / close control	In remote state
DI for local open / close control	In local state

If the relay is in local control state, the remote control inputs are ignored and vice versa. An object is controlled when a rising edge is detected from the selected input. The length of digital input pulse should be at least 60 ms.

4.6.2 Local or remote selection

In local mode, digital outputs can be controlled via the front panel but they cannot be controlled via a remote serial communication interface.

In remote mode, digital outputs cannot be controlled via a front panel but they can be controlled via a remote serial communication interface.

The local or remote mode can be selected by using the front panel or via one selectable digital input. The digital input is normally used to change a whole station to local or remote mode. You can select the L/R digital input in the **Control > Objects** setting view in eSetup Easergy Pro.

Table 41 - Local or remote selection

Action	**Control through eSetup Easergy Pro or SmartApp**		**Control through communication protocol**	
Local/Remote switch status	Local	Remote	Local	Remote
CB control	Yes	No	No	Yes
Setting or configuration changes	Yes	Yes	Yes	Yes
Communication configuration	Yes	Yes	Yes	Yes
Virtual inputs [27)]	Yes	No	No	Yes

[27)] Virtual inputs have a general parameter “Check L/R selection” for disabling the L/R check.

4.6.3 Object control with I and O buttons

The relay also has dedicated control buttons for objects. (I) stands for object closing and (O) controls object open command internally. Control buttons are configured in the **Control > Objects** setting view.

Table 42 - Parameters of function keys

Parameter	Value	Unit	Description	Set
Object for control buttons	Obj1–Obj8		Button I closes selected object if password is enabled Button O opens selected object if password is enabled	Set
Mode for control butons	Selective Direct		Control operation needs confirmation (select before operate) Control operation is done without confirmation	

4.6.4 Object control with F1 and F2

Objects can be controlled with the function buttons F1 and F2.

By default, the F1 and F2 buttons are configured to control F1 and F2 variables that can further be assigned to control objects.

Table 43 - Parameters of F1 and F2

Parameter	Value	State	Pulse length [28)]	Description
F1	F1, V_1-V_{20}, ObjCtrl	0.1	0-600 s	F1 controls F1, V_1-V_{20} or ObjCtrl parameters.
F2	F2, V_1-V_{20}, ObjCtrl	0.1	0-600 s	F2 controls F2, V_1-V_{20} and ObjCtrl parameters.

[28)] Pulse length applies to values F1 and F2 only

You can configure the button funtions in the **Control > Function buttons** setting view in eSetup Easergy Pro.

Figure 36 - **Function buttons** view

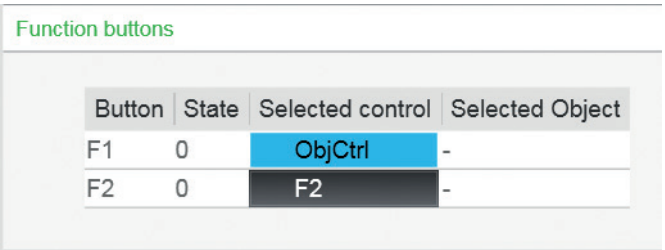

If **ObjCtrl** has been selected under **Selected control**, the selected object is shown under **Selected object**. Otherwise, this column is empty.

When selecting **ObjCtrl**, link the function button to the appropriate object in the **Control > Objects** setting view.

Figure 37 - **Ctrl object 2** view

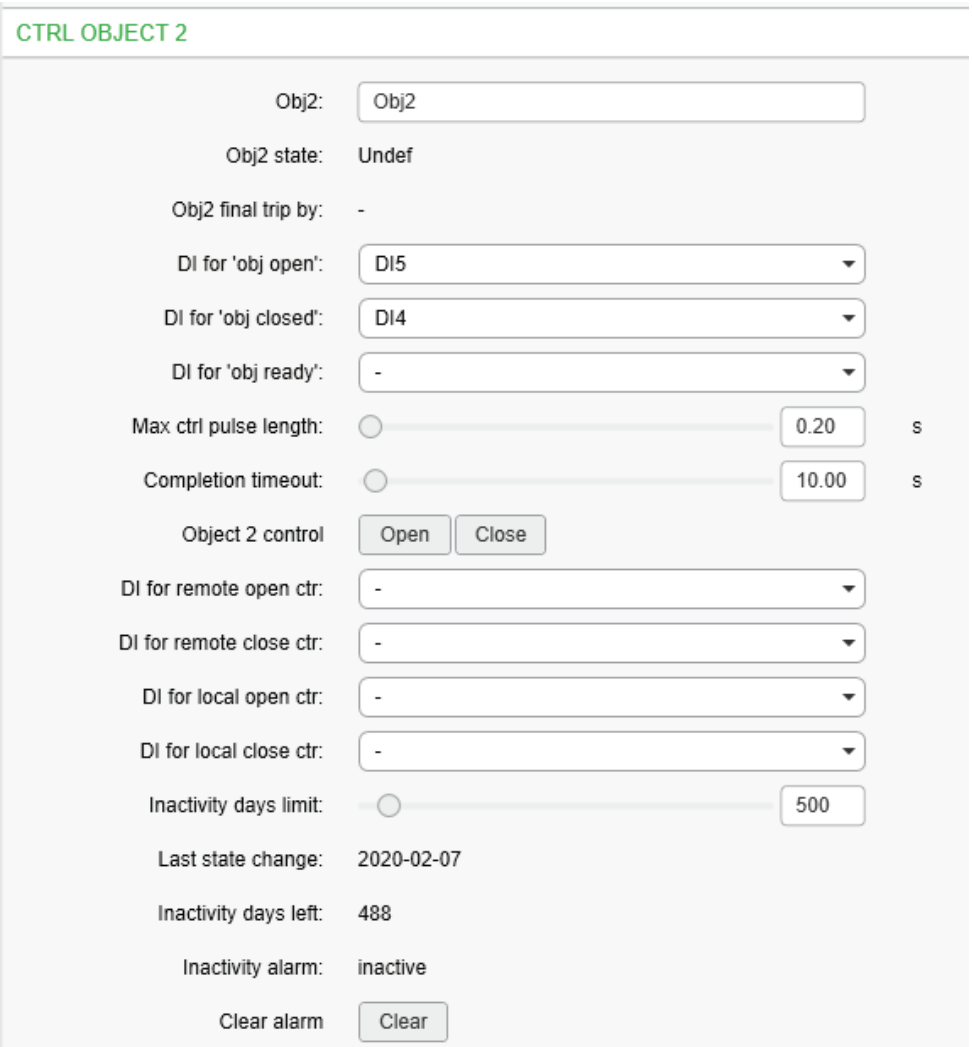

4.6.5 Adjustable time delay mechanism for the object's closing operation

For the safety of the operating personnel, the PowerLogic P3 offers an adjustable time delay mechanism to ensure the operating personnel has enough time to

evacuate safely. To adjust the local close delay time for the object's closing operation, navigate to the **CONTROL** > **Objects** setting view in eSetup Easergy Pro. By enabling the **Local close delay** setting, you can set the desired close delay time for the object within a range of 0 to 60 seconds.

Figure 38 - Local close delay setting

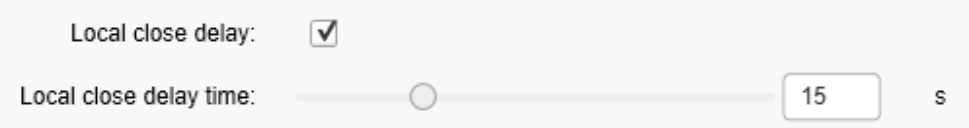

Note that the close delay time for the object is only available in Local mode. The closing operation of the object occurs asynchronously which can ensure smooth and uninterrupted system performance.

In **Output matrix** (for PowerLogic P3 Standard) / **LED matrix** (for PowerLogic P3 Advanced) page, eight matrix signals are incorporated specifically for delay operation, providing a dedicated interface for monitoring the delay close operations.

Taking the figure below as an example, if you set 15 seconds close delay for Object1, the assigned LED E on the device's front panel is active for the duration of the delay. After the elapsed 15 seconds, the state of the Object1 will change to "Close".

Figure 39 - Close delay for LED E

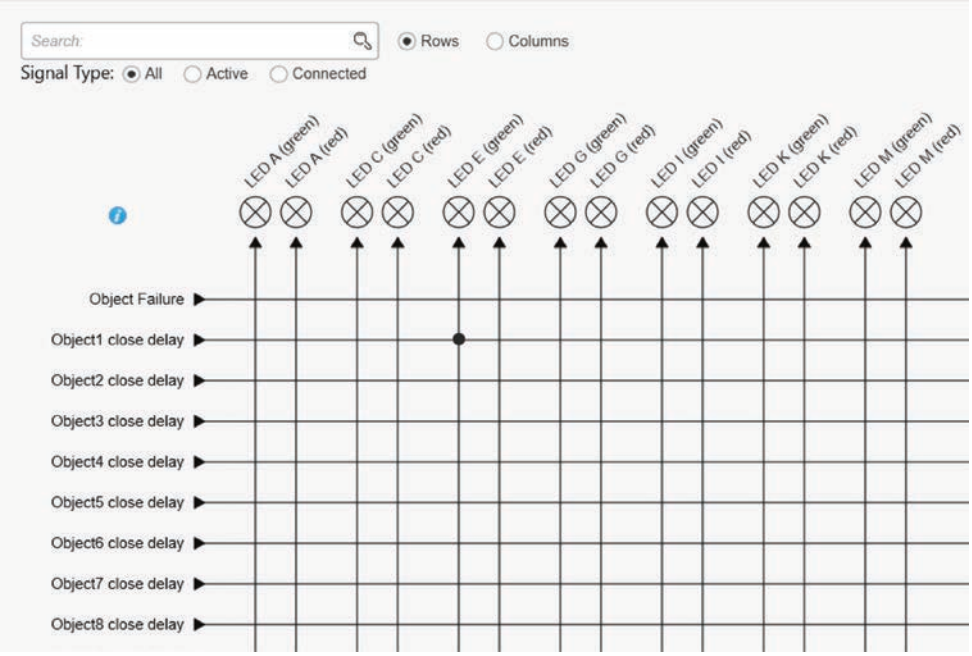

4.7 Logic functions

The relay supports customer-defined programmable logic for boolean signals. User-configurable logic can be used to create something that is not provided by

the relay as a default. You can see and modify the logic in the **Control > Logic** setting view in the eSetup Easergy Pro setting tool.

Table 44 - Available logic functions and their memory use

Logic functions	No. of gates reserved	Max. no. of input gates	Max. no. of logic outputs
AND	1	32 (An input gate can include any number of inputs.)	20
OR	1		
XOR	1		
AND+OR	2		
CT (Count+Reset)	2		
INVAND	2		
INVOR	2		
OR+AND	2		
RS (Reset+Set)	2		
RS_D (Set D+Load +Reset)	4		
R_OR	1		
F_OR	1		
E_OR	1		

The consumed memory is dynamically shown on the configuration view in percentage. The first value indicates the memory consumption of inputs, the second value the memory consumption of gates and the third value the memory consumption of outputs.

The logic is operational as long the memory consumption of the inputs, gates or outputs remains individually below or equal to 100%.

Figure 40 - Logic and memory consumption

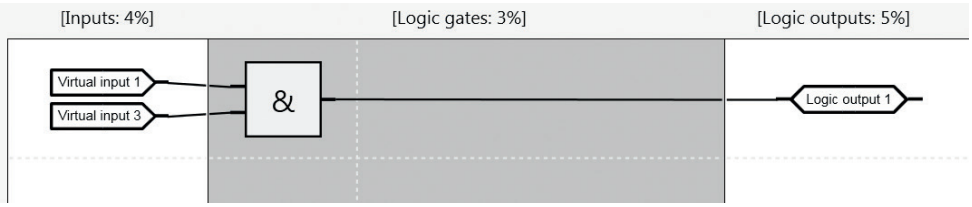

Truth tables

Table 45 - Truth table

Gate	Symbol	Truth table
AND	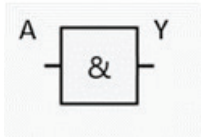	In: A; Out: Y 0 → 0 1 → 1
	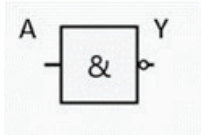	In: A; Out: Y 0 → 1 1 → 0
	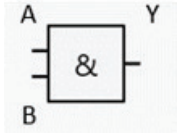	In: A, B; Out: Y 0, 1 → 0 1, 0 → 0 1, 1 → 1 0, 0 → 0
	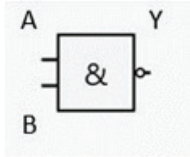	In: A, B; Out: Y 0, 1 → 1 1, 0 → 1 1, 1 → 0 0, 0 → 1
AND+OR	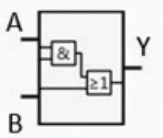	In: A, B; Out: Y 0, 0 → 0 1, 1 → 1 1, 0 → 1 0, 1 → 1

<table>
<tr><th>Gate</th><th>Symbol</th><th>Truth table</th></tr>
<tr><td>CT (Count+Reset)</td><td> 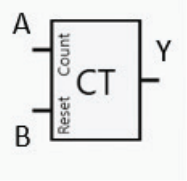
</td><td>
<table>
<tr><td colspan="2">In</td><td colspan="2">Out</td></tr>
<tr><td>A</td><td>B</td><td>Y</td><td>Y</td></tr>
<tr><td>Count</td><td>Reset</td><td>Setting</td><td>New</td></tr>
<tr><td>1</td><td></td><td>3</td><td>0</td></tr>
<tr><td>1</td><td></td><td>3</td><td>0</td></tr>
<tr><td>1</td><td></td><td>3</td><td>1</td></tr>
<tr><td></td><td>1</td><td>3</td><td>0</td></tr>
</table>
</td></tr>
<tr><td>INVAND</td><td> 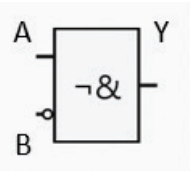
</td><td>
<table>
<tr><td colspan="2">In</td><td>Out</td></tr>
<tr><td>A</td><td>B</td><td>Y</td></tr>
<tr><td>0</td><td>0</td><td>0</td></tr>
<tr><td>1</td><td>0</td><td>1</td></tr>
<tr><td>1</td><td>1</td><td>0</td></tr>
<tr><td>0</td><td>1</td><td>0</td></tr>
</table>
</td></tr>
<tr><td>INVOR</td><td> 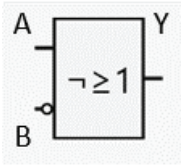
</td><td>
<table>
<tr><td colspan="2">In</td><td>Out</td></tr>
<tr><td>A</td><td>B</td><td>Y</td></tr>
<tr><td>0</td><td>0</td><td>1</td></tr>
<tr><td>1</td><td>1</td><td>1</td></tr>
<tr><td>1</td><td>0</td><td>1</td></tr>
<tr><td>0</td><td>1</td><td>0</td></tr>
</table>
</td></tr>
</table>

Gate	Symbol	Truth table
OR	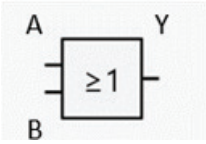	

In		Out
A	B	Y
0	0	0
1	1	1
1	0	1
0	1	1

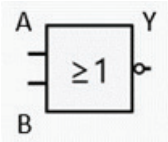

In		Out
A	B	Y
0	0	1
1	1	0
1	0	0
0	1	0

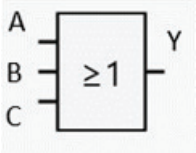

In			Out
A	B	C	Y
0	0	0	1
1	1	0	1
1	0	0	1
0	1	0	1
1	1	1	1

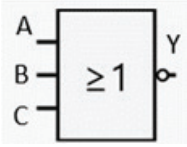

In			Out
A	B	C	Y
0	0	0	1
1	0	0	0
1	1	0	0
0	1	0	0
1	1	1	0

<table>
<tr><th>Gate</th><th>Symbol</th><th>Truth table</th></tr>
<tr><td>OR+AND</td><td> 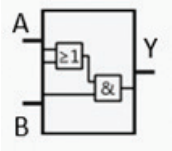
</td><td>
<table>
<tr><td colspan="2">In</td><td>Out</td></tr>
<tr><td>A</td><td>B</td><td>Y</td></tr>
<tr><td>0</td><td>0</td><td>0</td></tr>
<tr><td>1</td><td>1</td><td>1</td></tr>
<tr><td>1</td><td>0</td><td>0</td></tr>
<tr><td>0</td><td>1</td><td>0</td></tr>
</table>
</td></tr>
<tr><td>RS (Reset+Set)</td><td> 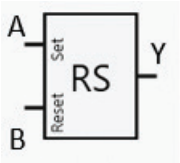
</td><td>
<table>
<tr><td colspan="2">In</td><td>Out</td></tr>
<tr><td>A</td><td>B</td><td>Y</td></tr>
<tr><td>Set</td><td>Reset</td><td>Y</td></tr>
<tr><td>1</td><td>0</td><td>1</td></tr>
<tr><td>0</td><td>0</td><td>1[29)]</td></tr>
<tr><td>0</td><td>0</td><td>0[30)]</td></tr>
<tr><td>X</td><td>1</td><td>0[31)]</td></tr>
</table>
[29)] Output = 1 (latched), if previous state was 1, 0, 1.
[30)] Output = 0, if previous state was X, 1, 0.
[31)] Output = 0, if RESET = 1 regardless of state of SET.
</td></tr>
<tr><td>RS_D (Set+D+Load+Reset)</td><td> 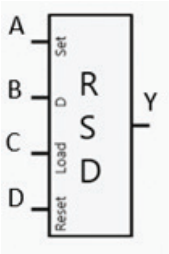
</td><td>
<table>
<tr><td>A</td><td>B</td><td>C</td><td>D</td><td>Y</td></tr>
<tr><td>Set</td><td>D</td><td>Load</td><td>Reset</td><td>State</td></tr>
<tr><td>0</td><td>0</td><td>0</td><td>0</td><td>0[32)]</td></tr>
<tr><td>1</td><td>X</td><td>X</td><td>0</td><td>1</td></tr>
<tr><td>1</td><td>X</td><td>X</td><td>1</td><td>0</td></tr>
<tr><td>0</td><td>1</td><td>0</td><td>0</td><td>0</td></tr>
<tr><td>0</td><td>1</td><td>1</td><td>0</td><td>1</td></tr>
<tr><td>0</td><td>1</td><td>1</td><td>1</td><td>0[33)]</td></tr>
</table>
[32)] Initial state
[33)] The state remains 1 until Reset is set active

X = Any state

If Set or D + Load are high, the state returns to high if Reset returns to low.
</td></tr>
</table>

<table>
<tr><th>Gate</th><th>Symbol</th><th>Truth table</th></tr>
<tr><td>XOR</td><td> 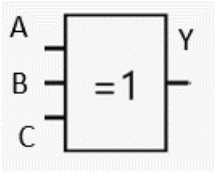
</td><td>
<table>
<tr><td colspan="3">In</td><td>Out</td></tr>
<tr><td>A</td><td>B</td><td>C</td><td>Y</td></tr>
<tr><td>0</td><td>0</td><td>0</td><td>0</td></tr>
<tr><td>0</td><td>0</td><td>1</td><td>1</td></tr>
<tr><td>0</td><td>1</td><td>0</td><td>1</td></tr>
<tr><td>0</td><td>1</td><td>1</td><td>0</td></tr>
<tr><td>1</td><td>0</td><td>0</td><td>1</td></tr>
<tr><td>1</td><td>0</td><td>1</td><td>0</td></tr>
<tr><td>1</td><td>1</td><td>0</td><td>0</td></tr>
<tr><td>1</td><td>1</td><td>1</td><td>1</td></tr>
</table>
</td></tr>
<tr><td rowspan="4">Pulse OR</td><td> 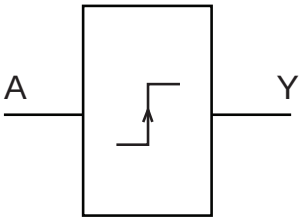
</td><td>When the input is set to a rising edge, output will generate a 20ms positive pulse. Falling edge will not trigger a pulse.</td></tr>
<tr><td> 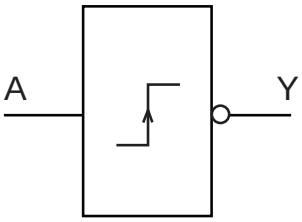
</td><td>When the input is set to a rising edge, output will generate a 20ms negative pulse. Falling edge will not trigger a pulse.</td></tr>
<tr><td> 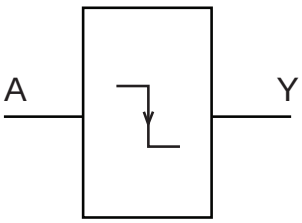
</td><td>When the input is set to a falling edge, output will generate a 20ms positive pulse. Rising edge will not trigger a pulse.</td></tr>
<tr><td> 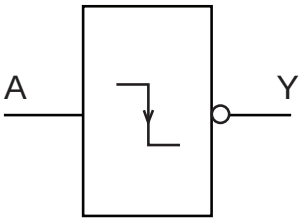
</td><td>When the input is set to a falling edge, output will generate a 20ms negative pulse. Rising edge will not trigger a pulse.</td></tr>
</table>

Gate	Symbol	Truth table
	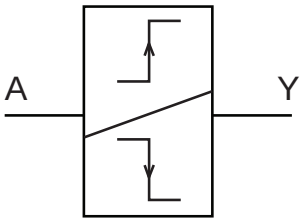	When the input is set to a rising or falling edge, output will generate a 20ms positive pulse.
	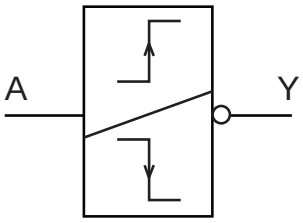	When the input is set to a rising or falling edge, output will generate a 20ms negative pulse.

29) Output = 1 (latched), if previous state was 1, 0, 1.
30) Output = 0, if previous state was X, 1, 0.
31) Output = 0, if RESET = 1 regardless of state of SET.
32) Initial state
33) The state remains 1 until Reset is set active

Logic element properties

After you have selected the required logic gate in eSetup Easergy Pro, you can change the function of the gate in the **Element properties** window by clicking the gate.

Figure 41 - Logic element properties

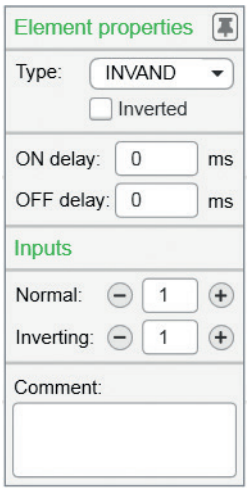

Table 46 - Settings available for the logical gates depending on the selected element

Property	Description
Element properties	
Type	Change the logical function of the gate
Inverted	Inverts the output state of the logical gate

Property	Description
ON delay	Time delay to activate the output after logical conditions are met
OFF delay	Time delay for how long the gate remain active even the logical condition is reset
Count	Setting for counter (CT gate only)
Reverse	Use to reverse AND and OR gates (AND +OR gate only)
Inputs	
Normal - / +	Use to increase or decrease number of inputs
Inverting - / +	Use to increase or decrease number of inverted inputs. This setting is visible for INVAND and INVOR gates only
Count	Use to increase or decrease number of count inputs (CT gate only)
Reset	Use to increase or decrease number of count inputs (CT gate only)
AND	Use to increase or decrease number of inputs for AND gates (AND+OR gate only)
OR	Use to increase or decrease number of inputs for OR gates (AND+OR gate only)
Set	Use to increase or decrease number of Set inputs (RS_D gate only)
D	Use to increase or decrease number of Data inputs (RS_D gate only)
Load	Use to increase or decrease number of Load inputs (RS_D gate only)
Reset	Use to increase or decrease number of Reset inputs (RS_D gate only)

4.8 Local panel

PowerLogic P3U20 and P3U30 have one LCD matrix display.

All the main menus are located on the left side of the display. To get to a submenu, move up and down the main menus.

Figure 42 - Local panel's main menu

4.8.1 Mimic view

The mimic view is set as the local panel's main view as default. You can modify the mimic according to the application or disable it, if it is not needed, via the eSetup Easergy Pro setting tool.

You can modify the mimic in the **General > Mimic** setting view in eSetup Easergy Pro and disable the mimic view in the **General > Local panel conf** setting view.

NOTE: The mimic itself or the local mimic settings cannot be modified via the local panel.

Figure 43 - **Mimic** view

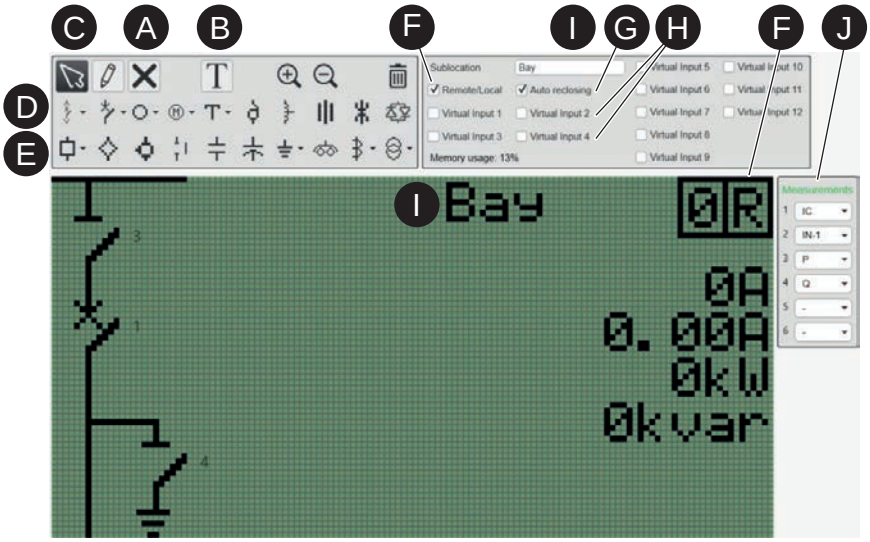

A. To clear an object or drawing, first point an empty square (A) with the mouse. Then point the object item with the mouse. The color of the object item turns red. To clear the whole mimic, click on the empty area.

B. Text tool

C. To move an existing drawing or object, point it with the mouse. The color turns green. Hold down the left mouse button and move the object.

F. The remote/local selection defines whether certain actions are granted or not. In remote state, it is not possible to locally enable or disable auto-reclosing or to control objects. The remote/local state can be changed in **Control > Objects**.

G. Creates auto-reclosing on/off selection to mimic.

H. Creates virtual input activation on the local mimic view.

D. Different type of configurable objects. The object's number corresponds to the number in **Control > Objects**.
E. Some predefined drawings.
I. Describes the relay's location. Text comes from the relay info menu.
J. Up to six configurable measurements.

Table 47 - Mimic functionality

Parameter	Value	Unit	Description	Set
Sublocation	Text field		Up to 9 characters. Fixed location.	Set
Object 1–8	1–8		Double-click on top of the object to change the control number between 1 and 8. Number 1 corresponds to object 1 in **General > Objects**.	Set
Remote/Local mode	L R		Local / Remote control. R stands for remote. Remote local state can be changed in **General > Objects** as well. Position can be changed.	Set
Auto reclosing	0 1		Possible to enable/disable auto-reclosure localy in local mode (L) or remotely in remote mode (R). Position can be changed.	Set

Parameter	Value	Unit	Description	Set
Measurement display 1–6	I_{L1}–I_{L3} I_0 IL1-IL3Flt Runh U_{12}, U_{23}, U_{31}, U_{L1}, U_{L2}, U_{L3}, U_0 f, P, Q, S, P.F. CosPhi E+, Eq+, E-, Eq- ARStart, ARFaill, ARShot1–5 IFLT Starts, Trips I_{0Calc} $I_{L1–IL3}$da, IL Pda, Qda, Sda T fSYNC, USYNC IL1–IL3Min, IL1–IL3Max, IL1–IL3daMax VAI1–VAI5 ExtAI1–6[34)]		Up to 6 freely selectable measurements.	Set
Virtual input 1–12	0 1		Change the status of virtual inputs while the password is enabled. Position can be changed.	Set

[34)] Requires serial communication interface and External IO protocol activated.

Set = Settable.

NOTE: The measurement view's data selection depends on the voltage measurement mode selected in the **General > Scaling** setting view.

4.8.2 Local panel configuration

You can modify the local panel configuration in the **General > Local panel conf** setting view in eSetup Easergy Pro.

Figure 44 - **Local panel configuration** view

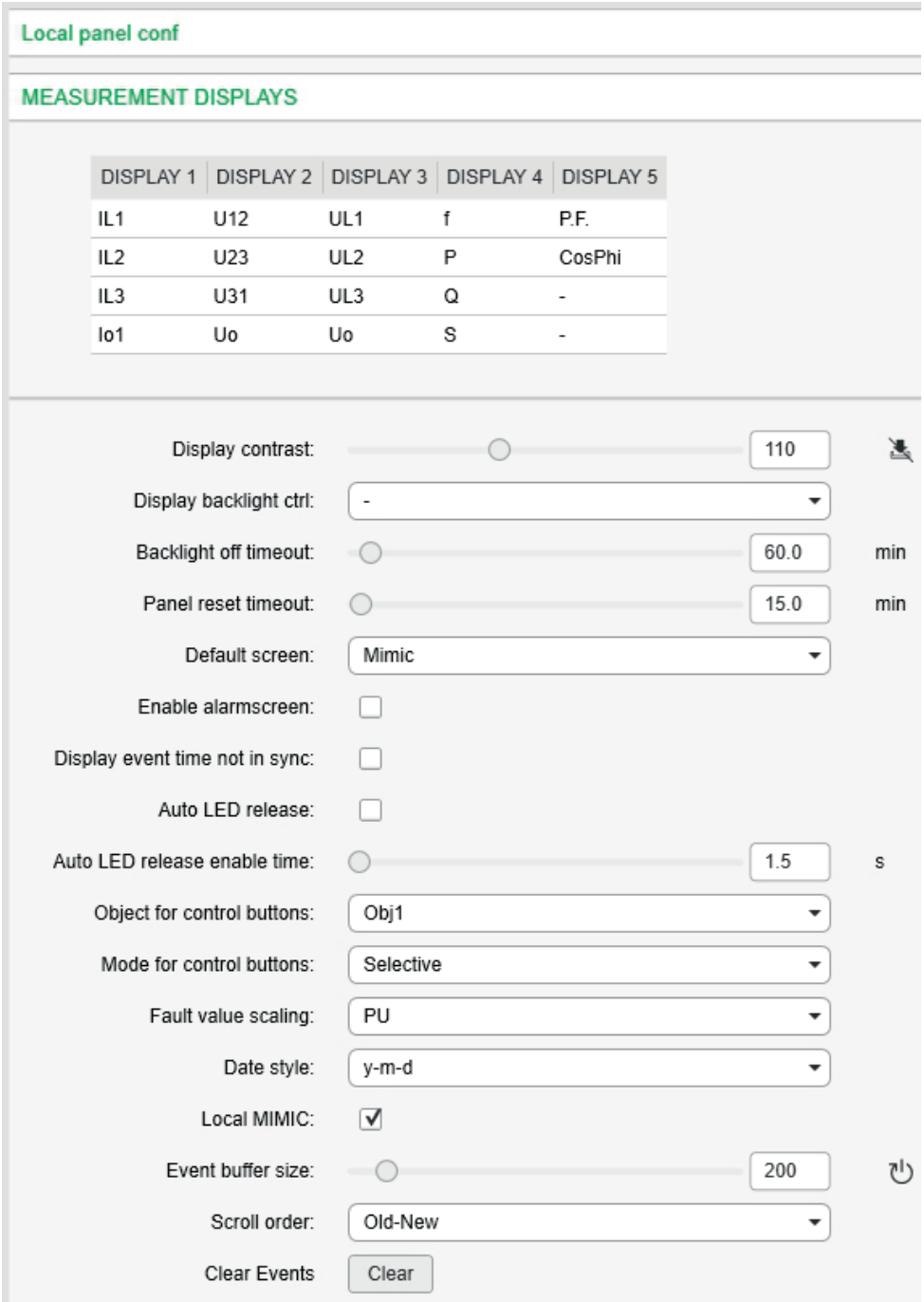

Table 48 - Local panel configuration parameters

Parameter	Value	Unit	Description	Set[35)]
Display 1–5	$I_{L1–3}$ I_0 IL1-IL3Flt Runh U_{12}, U_{23}, U_{31}, U_{L1}, U_{L2}, U_{L3}, U_0 f, P, Q, S, P.F. CosPhi E+, Eq+, E-, Eq- ARStart, ARFaill, ARShot1–5 IFLT Starts, Trips $I_{0\ Calc}$ IL IL1–3da IL1–3 max IL1–3 min IL1–3daMax Pda, Qda, Sda T fSYNC, USYNC VAI1–5 ExtAI1–6[36)] SetGrp		20 (5 x 4) freely configurable measurement values can be selected	Set[37)]
Display contrast	50–210		Contrast can be changed in the relay menu as well.	Set
Display backlight control	DI1–16 VI1–4 VO1–6		Activates the backlight of the display.	Set[37)]

Parameter	Value	Unit	Description	Set[35)]
Panel reset timeout	Value range: 0.0–2000.0 Default value: 15.0	min	Configurable delay for the front panel to return to the default screen when the front panel is not used. When this value is zero (0.0), this timeout never occurs.	Set
Default screen	Value range: Mimic, Meas disp1, Meas disp2, Meas disp3, Meas disp4, Meas disp5 Default value: Mimic		Default screen for the front panel. If the selected screen would result in a blank screen, the title screen is used as the default screen.	Set
Backlight off timeout	0.0–2000.0	min	Configurable delay for backlight to turns off when the relay is not used. Default value is 60 minutes. When value is zero (0.0) backlight stays on all the time.	Set
Enable alarm screen	Selected Unselected		Pop-up text box for events. pop-up events can be checked individually by pressing enter, but holding the button for 2 seconds checks all the events at once.	Set

Parameter	Value	Unit	Description	Set[35)]
AR info for mimic display	Selected Unselected		Auto reclosure status visible on top of the local mimic view.	Set
Sync I info for mimic display	Selected Unselected		Synchro-check status visible on top of the local mimic view. Operates together with auto-reclosure.	Set
Auto LED release	Selected Unselected		Enables automatix LED release functionality.	Set
Auto LED release enable time	0.1–600	s	Default 1.5 s. When new LEDs are latched, the previous active latches are released automatically if the set time has passed.	Set
Fault value scaling	PU, Pri		Fault values per unit or primary scsaled.	Set

Parameter	Value	Unit	Description	Set[35)]
Local MIMIC	Selected Unselected		Enable or disable the local mimic (enabled as default). When selected, the mimic is the local panel's default main view. When unselected, the measurement view is the default main view.	Set
Event buffer size	50–2000		Event buffer size. Default setting is 200 events.	Set[38)]

35) Set = Settable
36) Requires serial communication interface and External IO protocol activated.
37) Inputs vary according to the relay type.
38) The existing events are lost if the event buffer size is changed.

5 Protection functions

Each protection stage can independently be enabled or disabled according to the requirements of the intended application.

5.1 Current transformer requirements for overcurrent elements

The current transformer (CT) must be sized according to the rules described here for definite time (DT) or inverse definite minimum time (IDMT) to avoid saturation during steady-state short-circuit currents where accuracy is required.

The nominal CT primary and secondary must be selected according to the maximum short-circuit secondary current to meet the thermal withstand specified in *Table 151*.

The condition to be fulfilled by the CT saturation current (I_{sat}) depends on the type of overcurrent protection operate time.

Table 49 - Condition to be fulfilled by CT saturation current

Time delay	Condition to be fulfilled
DT	I_{sat} > 1.5 x set point (I_s)
IDMT	I_{sat} > 1.5 x the curve value which is the smallest of these two values: • I_{sc} max., maximum installation short-circuit current • 20 x Is (IDMT curve dynamic range)

Figure 45 - Overcurrent characteristics

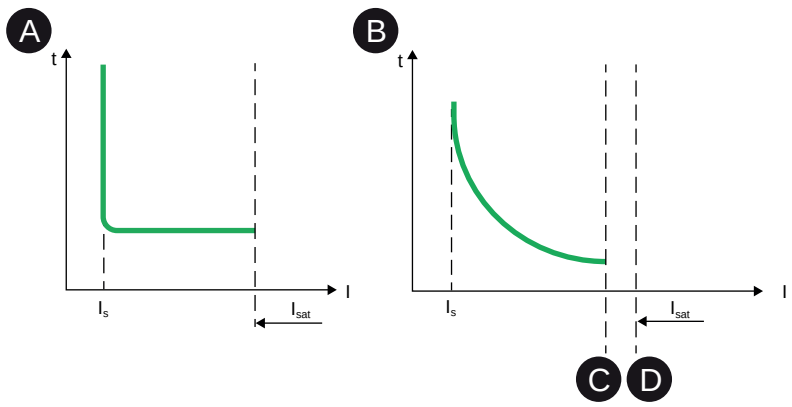

A. DT **C.** Minimum (I_{sc} max., 20 I_s)
B. IDMT **D.** 1.5 minimum (I_{sc} max., 20 I_s)

The method for calculating the saturation current depends on the CT accuracy class.

5.1.1 CT requirements when settings are unknown

If no other information about the settings is available, these characteristics are suitable for most situations.

Class P accuracy class

Table 50 - CT requirements

Rated secondary current (I_{ns})	Rated burden (VA_{ct})	Accuracy class and accuracy limit factor	CT secondary resistance (R_{ct})	Wiring resistance (R_w)
1 A	2.5 VA	5P20	< 3 Ω	< 0.075 Ω
5 A	7.5 VA	5P20	< 0.2 Ω	< 0.075 Ω

Class PX accuracy class

$Vk / (R_{ct} + R_w) > 30 \times I_{ns}$

For 1 A: $Vk > 30 \times (R_{ct} + R_w)$; for example: 30 x 3.9 = 117 V

For 5 A: $Vk > 150 \times (R_{ct} + R_w)$; for example: 150 x 0.53 = 79.5 V

5.1.2 Principle for calculating the saturation current in class P

A class P CT is characterized by:

- I_{np}: rated primary current (in A)
- I_{ns}: rated secondary current (in A)
- accuracy class, expressed by a percentage, 5P or 10P, followed by the accuracy limit factor (ALF), whose usual values are 5, 10, 15, 20, 30
- VA_{ct}: rated burden, whose usual values are 2.5/5/7.5/10/15/30 VA
- R_{ct}: maximum resistance of the secondary winding (in Ω)

The installation is characterized by the load resistance R_w at the CT secondary (wiring + protection device). If the CT load complies with the rated burden, that is, $R_w \times I_{ns}^2 <= VA_{ct}$, the saturation current is higher than ALF x I_{np}.

If the resistance R_{ct} is known, it is possible to calculate the actual CT ALF which takes account of the actual CT load. The saturation current equals the actual ALF x I_{np}.

Equation 2

$$Actual\ ALF = ALF \times \frac{Rct \times Ins^2 + VAct}{(Rct + Rw) \times Ins^2}$$

5.1.3 Examples of calculating the saturation current in class P

The saturation current for a CT is calculated with:

- transformation ratio: 100 A/5 A
- rated burden: 2.5 VA
- accuracy class and accuracy-limit factor: 5P20
- resistance of the secondary winding: 0.1 Ω

To have an ALF of at least 20, that is, a saturation current of 20 x I_{np} = 2 kA, the load resistance R_w of the CT must be less than *Equation 3*.

Equation 3

$$Rw, max = \frac{VAct}{Ins^2} = \frac{2.5}{5^2} = 0.1\Omega$$

This represents 12 m (39 ft) of wire with cross-section 2.5 mm² (AWG 14) for a resistance per unit length of approximately 8 Ω/km (2.4 mΩ/ft). For an installation with 50 m (164 ft) of wiring with section 2.5 mm² (AWG 14), Rw = 0.4 Ω.

As a result, the actual ALF is as presented in *Equation 4*.

Equation 4

$$Actual\ ALF = ALF \times \frac{Rct \times Ins^2 + VAct}{(Rct + Rw) \times Ins^2} = 20 \times \frac{0.1 \times 25 + 2.5}{(0.1 + 0.4) \times 25} = 8$$

Therefore, the saturation current I_{sat} = 8 x I_{np} = 800 A.

NOTE: The impedance of a PowerLogic P3 protection device's current inputs (0.004 Ω) is often negligible compared to the wiring resistance.

5.1.4 Principle for calculating the saturation current in class PX

A class PX CT is characterized by:

- I_{np}: rated primary current (in A)
- I_{ns}: rated secondary current (in A)
- V_k: rated knee-point voltage (in V)
- R_{ct}: maximum resistance of the secondary winding (in Ω)

The saturation current is calculated by the load resistance R_w at the CT secondary (wiring + protection device) as shown in *Equation 5*.

Equation 5

$$Isat = \frac{Vk}{Rct + Rw} \times \frac{Inp}{Ins}$$

5.1.5 Examples of calculating the saturation current in class PX

Table 51 - Examples of calculating the saturation current in class PX

CT Transformation ratio	Vk	R_{ct}	R_w	Saturation current
100 A/1 A	90 V	3.5 Ω	0.4 Ω	I_{sat} = 90 / (3,5 + 0,4) / 1 x I_{np} = 23,08 x I_{np}
100 A/5 A	60 V	0.13 Ω	0.4 Ω	I_{sat} = 60 / (0,13 + 0,4) / 5 x I_{np} = 22,6 x I_{np}

5.2 Maximum number of protection stages in one application

The relay limits the maximum number of enabled protection stages to about 30. The exact number depends on the central processing unit's load consumption and available memory as well as the type of the stages.

The individual protection stage and total load status can be found in the **Protection > Protection stage status** setting view in the eSetup Easergy Pro setting tool.

5.3 General features of protection stages

Setting groups

Setting groups are controlled by using digital inputs, function keys or virtual inputs, via the front panel or custom logic. When none of the assigned inputs are active, the setting group is defined by the parameter ‘SetGrp no control state’. When controlled input activates, the corresponding setting group is activated as well. If the control signal of the setting group is lost, the setting “Keep last” forces the last active group into use. If multiple inputs are active at the same time, the active setting group is defined by ‘SetGrp priority’. By using virtual I/O, the active setting group can be controlled using the local panel display, any communication protocol or the built-in programmable logic functions. All protection stages have four setting groups.

Figure 46 - **Setting groups** view

Example

Any digital input can be used to control setting groups but in this example, DI1, DI2, DI3 and DI4 are chosen to control setting groups 1 to 4. This setting is done with the parameter “Set group x DI control” where x refers to the desired setting group.

Figure 47 - DI1, DI2, DI3, DI4 configured to control Groups 1 to 4 respectively

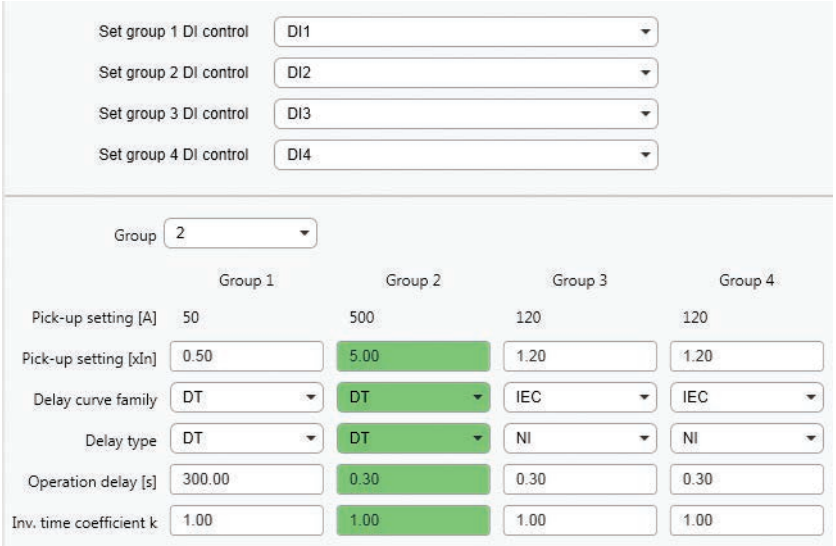

Use the 'SetGrp common change' parameter to force all protection stages to group 1, 2, 3 or 4. The control becomes active if there is no local control in the protection stage. You can activate this parameter using eSetup Easergy Pro.

“SetGrp priority” is used to give a condition to a situation where two or more digital inputs, controlling setting groups, are active at the same time. SetGrp priority could have values “1 to 4” or “4 to 1”.

Figure 48 - SetGrp priority setting in the **Valid Protection stages** view

Assuming that DI2 and DI3 are active at the same time and SetGrp priority is set to “1 to 4”, setting group 2 becomes active. If SetGrp priority is reversed, that is, set to “4 to 1”, the setting group 3 becomes active.

Accept zero delay

User can set the delay time to 0 by enabling this selection. For normal operation, the user can only set the delay time to the minimum value of the setting range.

Protection stage statuses

The status of a protection stage can be one of the followings:

- **Ok = ‘-‘**

  The stage is idle and is measuring the analog quantity for the protection. No power system fault detected.
- **Blocked**

  The stage is detecting a fault but blocked for some reason.
- **Start**

  The stage is counting the operation delay.
- **Trip**

  The stage has tripped and the fault is still on.

The blocking reason may be an active signal via the block matrix from other stages, the programmable logic or any digital input. Some stages also have built-in blocking logic. For more details about the block matrix, see *4.4.2 Blocking matrix*.

Protection stage counters

Each protection stage has start and trip counters that are incremented when the stage starts or trips. The start and trip counters are reset on relay reboot.

The user can also view and reset the start and trip counters through eSetup Easergy Pro on Protection > Protection stage status 2, and clear fault logs as well.

Overcurrent status supervision

The firmware records and shows the last fault current and earth fault current values. The user can view this through eSetup Easergy Pro on Protection > Protection stage status 2.

The user can supervise line alarm and fault through the above page; once overcurrent stage starts, overcurrent alarm (L1,L2,L3) is issued. Earth fault alarm works for the same mechanism. When the overcurrent stage trips, overcurrent fault is issued and the corresponding fault is issued at the same time. The user can also set the reset time for alarms and faults, and as the set time has elapsed, the alarms and faults are set to zero.

Fault current recording

Firmware provides fault current recording. After one stage trips and releases, it will record L1~L3 current and residual currents. It also provides a clearing delay for the fault value, and after the delay has elapsed, it can record new fault values, otherwise, if new fault current happens during the countdown, the value will not be recorded.

Forcing start or trip condition for testing purposes

There is a "Forcing flag" parameter which, when activated, allows forcing the status of any protection stage to be "start" or "trip" for half a second. By using this forcing feature, current or voltage injection is not necessary to check the output matrix configuration, to check the wiring from the digital outputs to the circuit breaker and also to check that communication protocols are correctly transferring event information to a SCADA system.

After testing, the forcing flag is automatically reset five minutes after the last local panel push button activity.

The force flag also enables forcing the digital outputs and the optional mA outputs.

The force flag can be found in the **Device/Test > Relays** setting view.

Figure 49 - Force flag

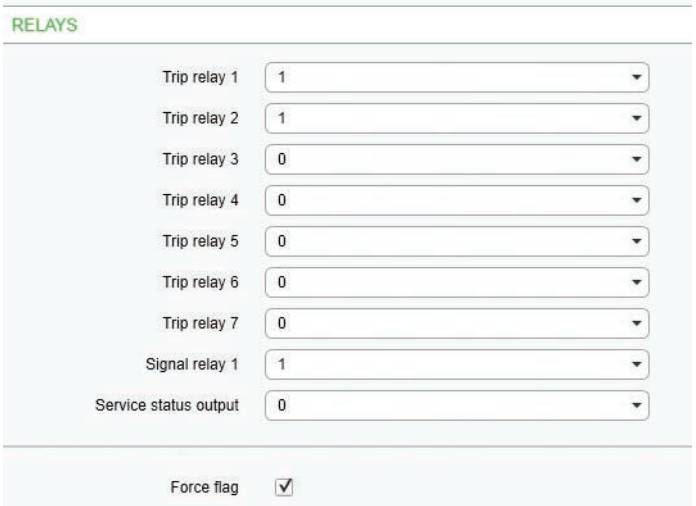

Start and trip signals

Every protection stage has two internal binary output signals: start and trip. The start signal is issued when a fault has been detected. The trip signal is issued after the configured operation delay unless the fault disappears before the end of the delay time.

The hysteresis, as indicated in the protection stage's characteristics data, means that the signal is regarded as a fault until the signal drops below the start setting determined by the hysteresis value.

Figure 50 - Example behavior of an over-protection with hysteresis

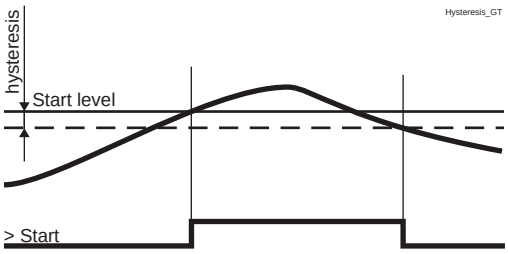

Output matrix

Using the output matrix, you can connect the internal start and trip signals to the digital outputs and indicators. For more details, see *4.4.1 Output matrix*.

Blocking

Any protection function can be blocked with internal and external signals using the block matrix (*4.4.2 Blocking matrix*). Internal signals are for example logic outputs and start and trip signals from other stages and external signals are for example digital and virtual inputs as well as GOOSE signals.

Some protection stages have also built-in blocking functions. For example under-frequency protection has built-in under-voltage blocking to avoid tripping when the voltage is off.

When a protection stage is blocked, it does not trip if a fault condition is detected. If blocking is activated during the operation delay, the delay counting is frozen until the blocking goes off or the start reason, that is the fault condition, disappears. If the stage is already tripping, the blocking has no effect.

Use 100 ms safety margin delay when the downstream relay’s protection start signal is hardwired to interlock protection stages at the upstream relay.

Dependent time operation

The operate time in the dependent time mode is dependent on the magnitude of the injected signal. The bigger the signal, the faster the stage issues a trip signal and vice versa. The tripping time calculation resets if the injected quantity drops below the start level.

Definite time operation

Figure 51 - Dependent time and definite time operation curves

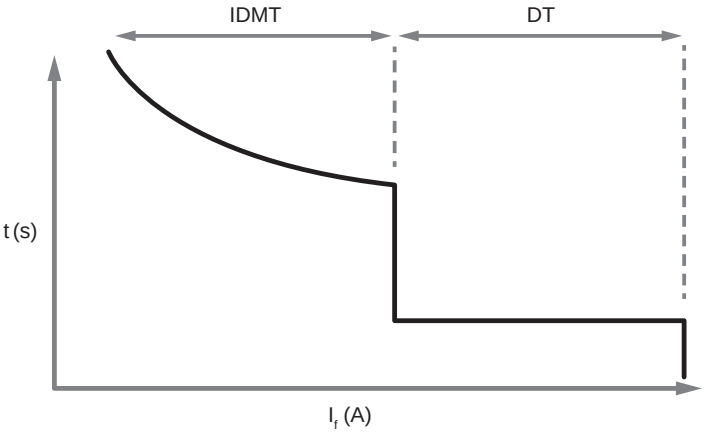

The operate time in the definite time mode is fixed by the **Operation delay** setting. The timer starts when the protection stage activates and counts until the set time has elapsed. After that, the stage issues a trip command. Should the protection stage reset before the definite time operation has elapsed, then the stage resets.

By default, the definite time delay cannot be set to zero because the value contains processing time of the function and operate time of the output contact. This means that the time indicated in the **Definite time** setting view is the actual operate time of the function. Use the **Accept zero delay** setting in the protection stage setting view to accept the zero setting for definite time function. In this case, the minimum operate time of the function must be tested separately.

Overshoot time

Overshoot time is the time the protection device needs to notice that a fault has been cleared during the operate time delay. This parameter is important when grading the operate time delay settings between devices.

Figure 52 - Overshoot time

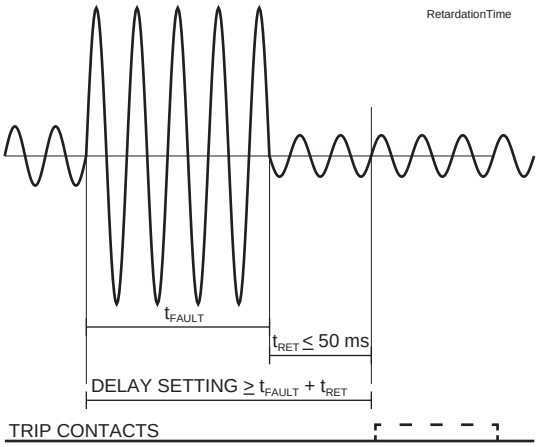

If the delay setting would be slightly shorter, an unselective trip might occur (the dash line pulse).

For example, when there is a big fault in an outgoing feeder, it might start both the incoming and outgoing feeder relay. However, the fault must be cleared by the outgoing feeder relay and the incoming feeder relay must not trip. Although the operating delay setting of the incoming feeder is more than at the outgoing feeder, the incoming feeder might still trip if the operate time difference is not big enough. The difference must be more than the overshoot time of the incoming feeder relay plus the operate time of the outgoing feeder circuit breaker.

Figure 52 shows an overcurrent fault seen by the incoming feeder when the outgoing feeder clears the fault. If the operation delay setting would be slightly shorter or if the fault duration would be slightly longer than in the figure, an unselective trip might happen (the dashed 40 ms pulse in the figure). In PowerLogic P3 devices, the overshoot time is less than 50 ms.

Reset time

Figure 53 shows an example of reset time, that is, release delay when the relay is clearing an overcurrent fault. When the relay's trip contacts are closed, the circuit breaker (CB) starts to open. After the CB contacts are open, the fault current still flows through an arc between the opened contacts. The current is finally cut off when the arc extinguishes at the next zero crossing of the current. This is the start moment of the reset delay. After the reset delay the trip contacts and start contact are opened unless latching is configured. The precise reset time depends on the fault size; after a big fault, the reset time is longer. The reset time also depends on the specific protection stage.

The maximum reset time for each stage is specified under the characteristics of every protection function. For most stages, it is less than 95 ms.

Figure 53 - Reset time

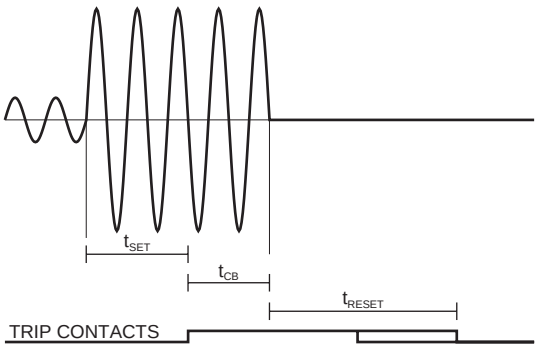

Reset time is the time it takes the trip or start relay contacts to open after the fault has been cleared.

Hysteresis or dead band

When comparing a measured value against a start value, some amount of hysteresis is needed to avoid oscillation near equilibrium situation. With zero hysteresis, any noise in the measured signal or any noise in the measurement itself would cause unwanted oscillation between fault-on and fault-off situations.

Figure 54 - Example behavior of an over-protection with hysteresis

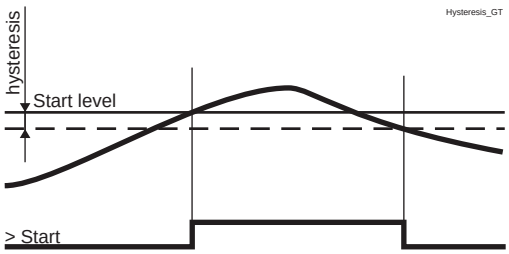

Figure 55 - Example behavior of an under-protection with hysteresis

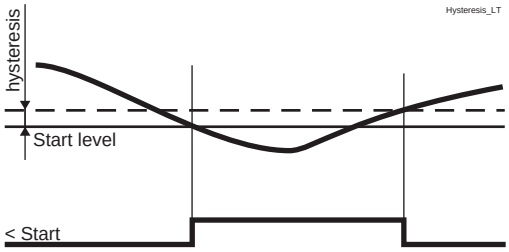

Time grading

When a fault occurs, the protection scheme only needs to trip circuit breakers whose operation is required to isolate the fault. This selective tripping is also called discrimination or protection coordination and is typically achived by time grading. Protection systems in successive zones are arranged to operate in times that are graded through the sequence of equipment so that upon the occurrence of a fault, although a number of protections devices respond, only those relevant to the faulty zone complete the tripping function.

The recommended discrimination time between two PowerLogic P3 devices in an MV network is 170–200 ms. This is based on the following facts:

- T_c: circuit breaker operating time, 60 ms
- T_m: upstream protection overshoot time (retardation time), 50 ms
- δt: time delay tolerance, 25 ms
- m: safety margin, 10 ms
- Δt: discrimination time, 170–200 ms

Figure 56 - Time grading

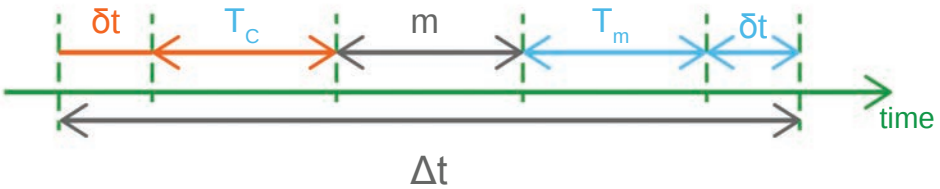

Recorded values of the last eight faults

There is detailed information available on the last eight faults for each protection stage. The recorded values are specific for the protection stages and can contain

information like time stamp, fault value, elapsed delay, fault current, fault voltage, phase angle and setting group.

NOTE: The recorded values are lost if the relay power is switched off.

Squelch limit

Current inputs have a squelch limit (noise filter) at 0.005 x I_N. When the measured signal goes below this threshold level, the signal is forced to zero.

NOTE: If I_{CALC} is used to measure the residual current, the squelch limit for the I_{CALC} signal is same as for the phase currents. The I_0 setting range begins at the level of phase currents' squelch limit. This can cause instability if the minimum setting is used with the $I_{0\ CALC}$ mode.

5.4 Application modes

The application modes available are the feeder protection mode and the motor protection mode. In the feeder protection mode, all current dependent protection functions are relative to nominal current I_N derived by CT ratios. The motor protection functions are unavailable in the feeder protection mode. In the motor protection mode all current-dependent protection functions are relative to the motor’s nominal current I_{MOT}. The motor protection mode enables motor protection functions. All functions which are available in the feeder protection mode are also available in the motor protection mode. Default value of the application mode is the feeder protection mode.

The application mode can be changed with eSetup Easergy Pro software or from CONF menu of the relay. Changing the application mode requires configurator password.

5.5 Current protection function dependencies

The current-based protection functions are relative to the application mode. In the motor mode, all of the current-based functions are relative to the motor's nominal current (I_{MOT}) and in the feeder mode to the current transformer's nominal current (I_N).

5.6 Dependent operate time

The dependent operate time – that is, the inverse definite minimum time (IDMT) type of operation – is available for several protection functions. The common principle, formula and graphic representations of the available dependent delay types are described in this chapter.

Dependent delay means that the operate time depends on the measured real time process values during a fault. For example, with an overcurrent stage using dependent delay, a bigger a fault current gives faster operation. The alternative to dependent delay is definite delay. With definite delay, a preset time is used and the operate time does not depend on the size of a fault.

Stage-specific dependent delay

Some protection functions have their own specific type of dependent delay. Details of these dedicated dependent delays are described with the appropriate protection function.

Operation modes

There are three operation modes to use the dependent time characteristics:

- Standard delays

  Using standard delay characteristics by selecting a curve family (IEC, IEEE, IEEE2, RI) and a delay type (Normal inverse, Very inverse etc). See *5.6.1 Standard dependent delays using IEC, IEEE, IEEE2 and RI curves*.
- Standard delay formulae with free parameters

  selecting a curve family (IEC, IEEE, IEEE2) and defining one's own parameters for the selected delay formula. This mode is activated by setting delay type to ‘Parameters’, and then editing the delay function parameters A – E. See *5.6.2 Free parameterization using IEC, IEEE and IEEE2 curves*.
- Fully programmable dependent delay characteristics

  Building the characteristics by setting 16 [current, time] points. The relay interpolates the values between given points with inverse curve which is reciprocal of 2nd degree polynomial. The interpolation function is reciprocal of 2nd degree polynomial

$$T\left(I/I_{Start}\right) = \frac{1}{f\left(I/I_{Start}\right)}$$

where

$$f\left(I/I_{Start}\right)$$

is the 2nd degree polynomial.

This mode is activated by setting the curve family to ‘PrgN’. There is a maximum of three different programmable curves available at the same time. Each programmed curve can be used by any number of protection stages. See *5.6.3 Programmable dependent time curves*.

⚠ CAUTION

UNINTENDED EQUIPMENT OPERATION

When changing the dependent time (inverse curves) operation mode settings manually through the device HMI, change both the Curve (Curve delay family) and Type (Delay type) setting.

Failure to follow these instructions can result in injury or equipment damage.

Dependent time limitation

The maximum dependent time is limited to 600 seconds.

Local panel graph

The relay shows a graph of the currently used dependent delay on the local panel display. The up and down keys can be used for zooming. Also the delays at 20 x I_{SET}, 4 x I_{SET} and 2 x I_{SET} are shown.

Dependent time setting error signal

If there are any errors in the dependent delay configuration, the appropriate protection stage uses the definite time delay.

There is a signal ‘Setting Error’ available in the output matrix that indicates different situations:

1. Settings are currently changed with eSetup Easergy Pro or local panel.
2. There is temporarily an illegal combination of curve points. For example, if previous setting was IEC/NI and then curve family is changed to IEEE, this causes a setting error because there is no NI type available for IEEE curves. After changing valid delay type for IEEE mode (for example MI), the ‘Setting Error’ signal releases.
3. There are errors in formula parameters A – E, and the relay is not able to build the delay curve.
4. There are errors in the programmable curve configuration, and the relay is not able to interpolate values between the given points.

Limitations

The maximum measured secondary phase current is 50 x I_N and the maximum directly measured earth fault current is 10 x I_{0N} for earth fault overcurrent input. The full scope of dependent delay curves goes up to 20 times the setting. At a high setting, the maximum measurement capability limits the scope of dependent curves according to *Table 52*.

Table 52 - Maximum measured secondary currents and settings for phase and earth fault overcurrent inputs

Current input	Maximum measured secondary current	Maximum secondary scaled setting enabling dependent delay times up to full 20x setting
I_{L1}, I_{L2}, I_{L3} and $I_{0\ Calc}$	250 A	12.5 A
I_0 = 5 A	50 A	2.5 A
I_0 = 1 A	10 A	0.5 A

1. **Example of limitation**

   CT = 750 / 5

   CT_0 = 100 / 1 (cable CT is used for earth fault overcurrent)

For overcurrent stage I>, *Table 52* gives 12.5 A. Thus, the maximum setting the for I> stage giving full dependent delay range is 12.5 A / 5 A = 2.5 xI_N = 1875 $A_{Primary}$.

For earth fault stage I_0>, *Table 52* gives 0.5 A. Thus, the maximum setting for the I_0> stage giving full dependent delay range is 0.5 A / 1 A = 0.5 xI_{0N} = 50 $A_{Primary}$.

2. **Example of limitation**

   CT = 750 / 5

   Application mode is Motor

   Rated current of the motor = 600 A

   I_{0Calc} = (I_{L1} + I_{L2} + I_{L3}) is used for earth fault overcurrent.

   At secondary level, the rated motor current is 600 / 750*5 = 4 A

   For overcurrent stage I>, *Table 52* gives 12.5 A. Thus, the maximum setting giving full dependent delay range is 12.5 A / 4 A = 3.13 x I_{MOT} = 1875 $A_{Primary}$.

   For earth fault stage I_0>, *Table 52* gives 12.5 A. Thus, the maximum setting for the I_0> stage giving full dependent delay range is 12.5 A / 5 A = 2.5 x I_{0N} = 1875 $A_{Primary}$.

5.6.1 Standard dependent delays using IEC, IEEE, IEEE2 and RI curves

The available standard dependent delays are divided in four categories called dependent curve families: IEC, IEEE, IEEE2 and RI. Each category contains a set of different delay types according to *Table 53*.

Dependent time setting error signal

The dependent time setting error signal activates if the delay category is changed and the old delay type does not exist in the new category. See *5.6 Dependent operate time* for more details.

Limitations

The minimum definite time delay starts when the measured value is twenty times the setting, at the latest. However, there are limitations at high setting values due to the measurement range. See *5.6 Dependent operate time* for more details.

Table 53 - Available standard delay families and the available delay types within each family

Delay type		**Curve family**				
		DT	**IEC**	**IEEE**	**IEEE2**	**RI**
DT	Definite time	X				
NI	Normal inverse		X		X	

Delay type		Curve family				
		DT	IEC	IEEE	IEEE2	RI
VI	Very inverse		X	X	X	
EI	Extremely inverse		X	X	X	
LTI	Long time inverse		X	X		
LTEI	Long time extremely inverse			X		
LTVI	Long time very inverse			X		
MI	Moderately inverse			X	X	
STI	Short time inverse			X		
STEI	Short time extremely inverse			X		
RI	Old ASEA type					X
RXIDG	Old ASEA type					X

IEC dependent operate time

The operate time depends on the measured value and other parameters according to *Equation 6*. Actually this equation can only be used to draw graphs or when the measured value I is constant during the fault. A modified version is implemented in the relay for real time usage.

Equation 6

$$t = \frac{k\ A}{\left(\frac{I}{I_{START}}\right)^{B} - 1}$$

t = Operation delay in seconds

k = User’s multiplier Inv. time coefficient k

I = Measured value

I_{START} = Start setting

A, B = Constants parameters according to *Table 54*.

There are three different dependent delay types according to IEC 60255-3, Normal inverse (NI), Extremely inverse (EI), Very inverse (VI) and a VI extension. In addition, there is a de facto standard Long time inverse (LTI).

Table 54 - Constants for IEC dependent delay equation

Delay type		Parameter	
		A	**B**
NI	Normal inverse	0.14	0.02
EI	Extremely inverse	80	2
VI	Very inverse	13.5	1
LTI	Long time inverse	120	1

Example of the delay type "Normal inverse (NI)":

k = 0.50

I = 4 pu (constant current)

I_{PICKUP} = 2 pu

A = 0.14

B = 0.02

Equation 7

$$t = \frac{0.50 \cdot 0.14}{\left(\frac{4}{2}\right)^{0.02} - 1} = 5.0$$

The operate time in this example is five seconds. The same result can be read from *Figure 57*.

Figure 57 - IEC normal inverse delay

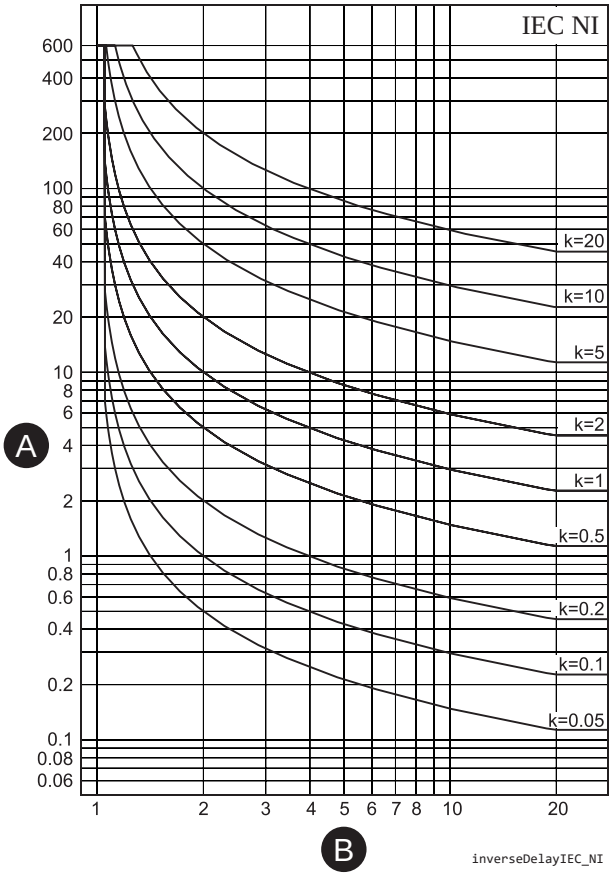

A. Delay (s) **B.** I / I_{set}

Figure 58 - IEC extremely inverse delay

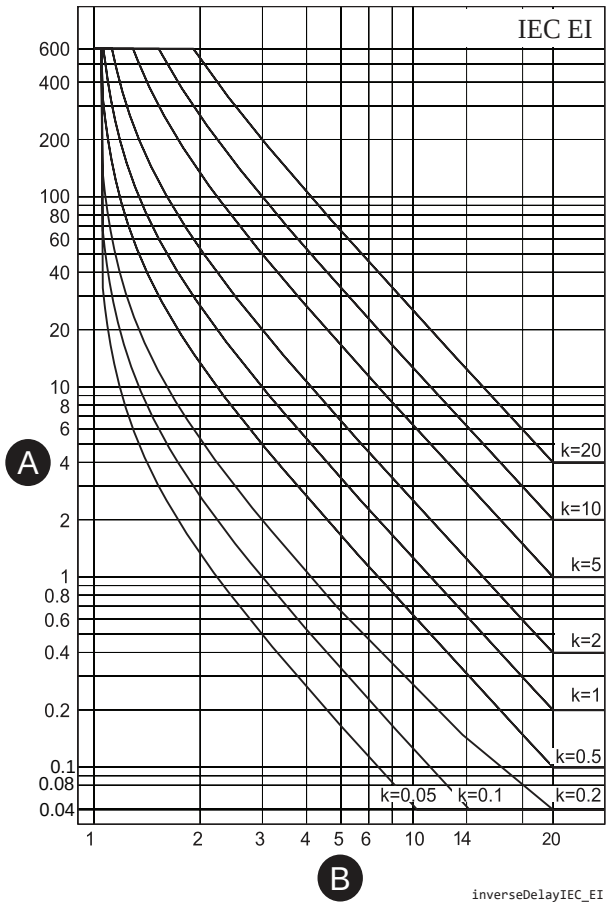

A. Delay (s) **B.** I / I_{set}

Figure 59 - IEC very inverse delay

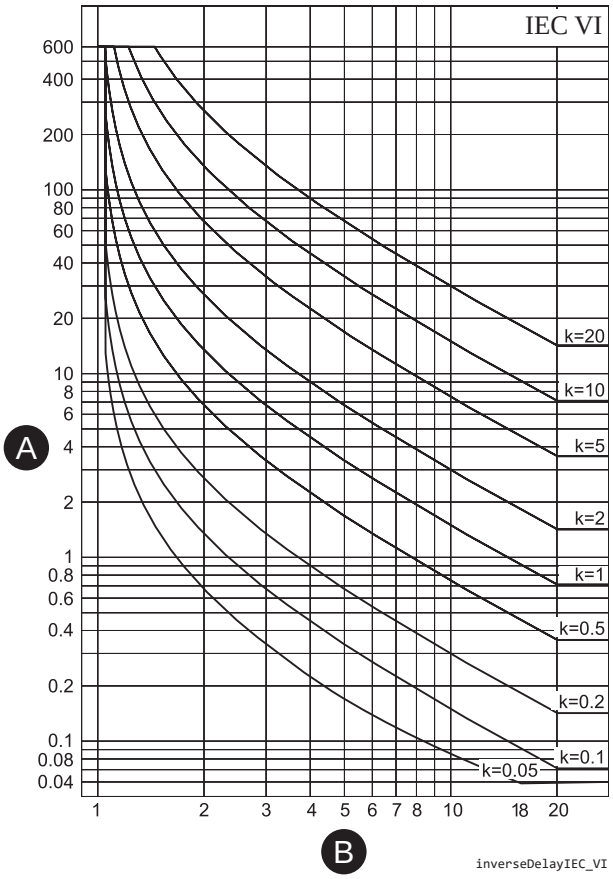

A. Delay (s) **B.** I / I_{set}

Figure 60 - IEC long time inverse delay

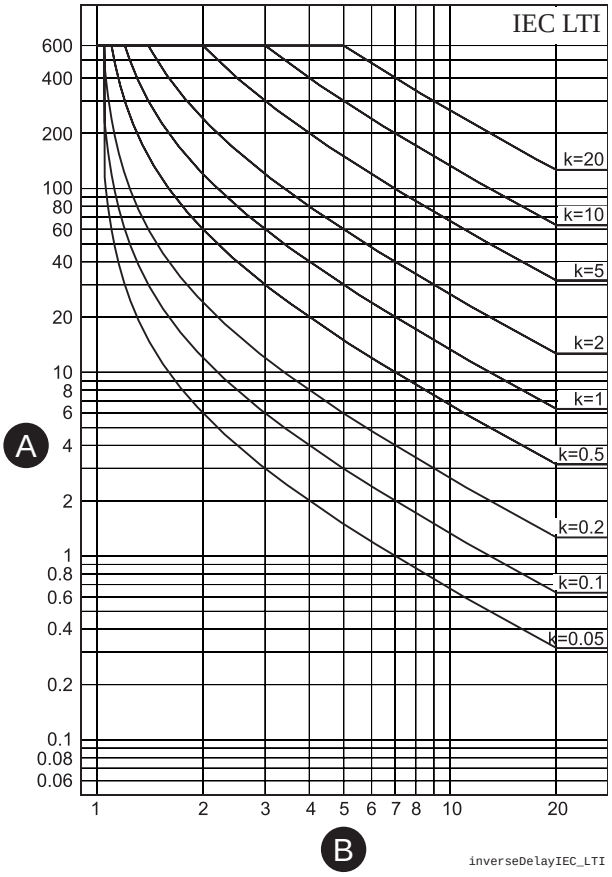

A. Delay (s) **B.** I / I_{set}

IEEE/ANSI dependent operate time

There are three different delay types according to IEEE Std C37.112-1996 (MI, VI, EI) and many de facto versions according to *Table 55*. The IEEE standard defines dependent delay for both trip and release operations. However, in the PowerLogic P3 relay only the trip time is dependent according to the standard but the reset time is constant.

The operate delay depends on the measured value and other parameters according to *Equation 8*. Actually, this equation can only be used to draw graphs or when the measured value I is constant during the fault. A modified version is implemented in the relay for real-time usage.

Equation 8

$$t = k\left[\frac{A}{\left(\frac{I}{I_{START}}\right)^{C} - 1} + B\right]$$

t = Operation delay in seconds

k = User's multiplier

I = Measured value

I_{START} = Start setting

A,B,C = Constant parameter according to *Table 55*

Table 55 - Constants for IEEE/ANSI inverse delay equation

Delay type		Parameter		
		A	B	C
LTI	Long time inverse	0.086	0.185	0.02
LTVI	Long time very inverse	28.55	0.712	2
LTEI	Long time extremely inverse	64.07	0.250	2
MI	Moderately inverse	0.0515	0.1140	0.02
VI	Very inverse	19.61	0.491	2
EI	Extremely inverse	28.2	0.1217	2
STI	Short time inverse	0.16758	0.11858	0.02
STEI	Short time extremely inverse	1.281	0.005	2

Example of the delay type "Moderately inverse (MI)":

k = 0.50

I = 4 pu

I_{PICKUP} = 2 pu

A = 0.0515

B = 0.114

C = 0.02

Equation 9

$$t = 0.50 \cdot \left[\frac{0.0515}{\left(\frac{4}{2}\right)^{0.02} - 1} + 0.1140 \right] = 1.9$$

The operate time in this example is 1.9 seconds. The same result can be read from *Figure 64*.

Figure 61 - ANSI/IEEE long time inverse delay

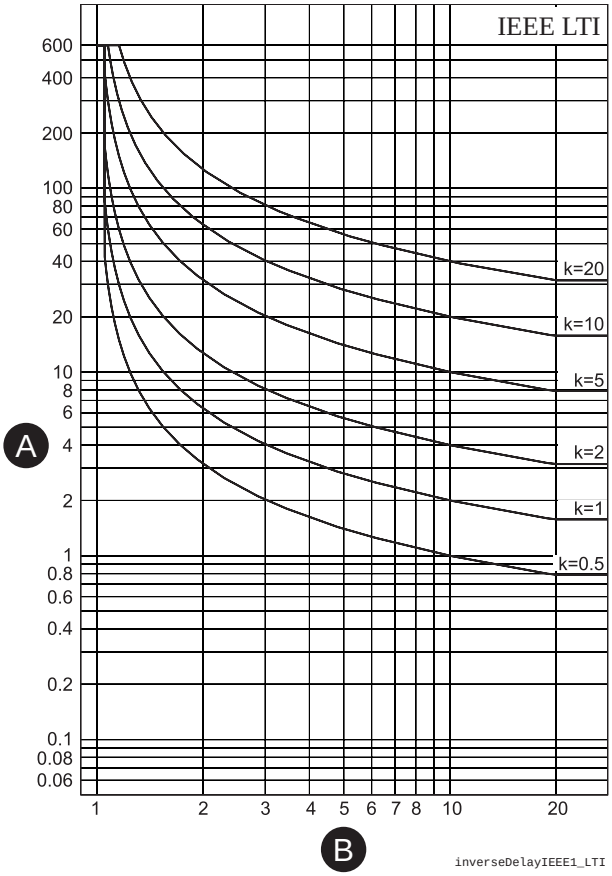

A. Delay (s) **B.** I / I_{set}

Figure 62 - ANSI/IEEE long time very inverse delay

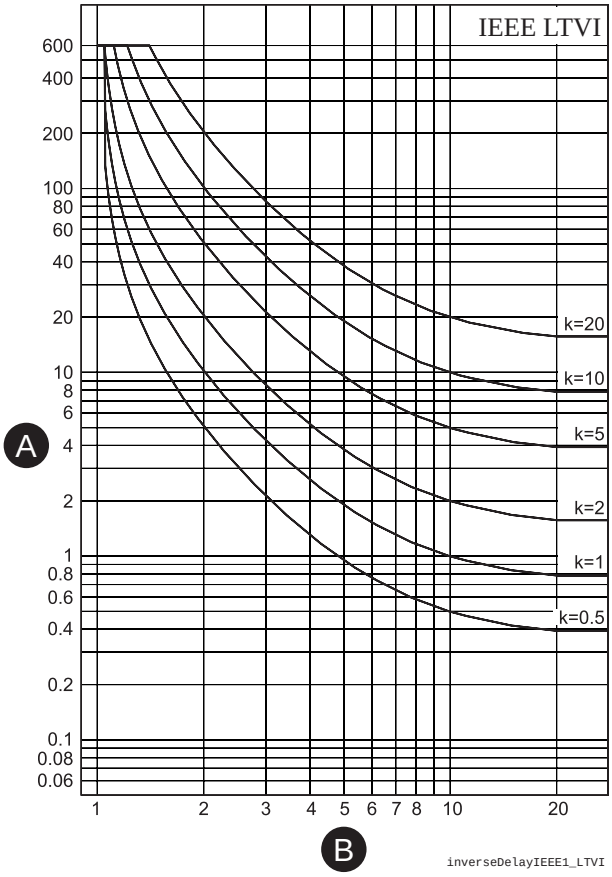

A. Delay (s) **B.** I / I_{set}

Figure 63 - ANSI/IEEE long time extremely inverse delay

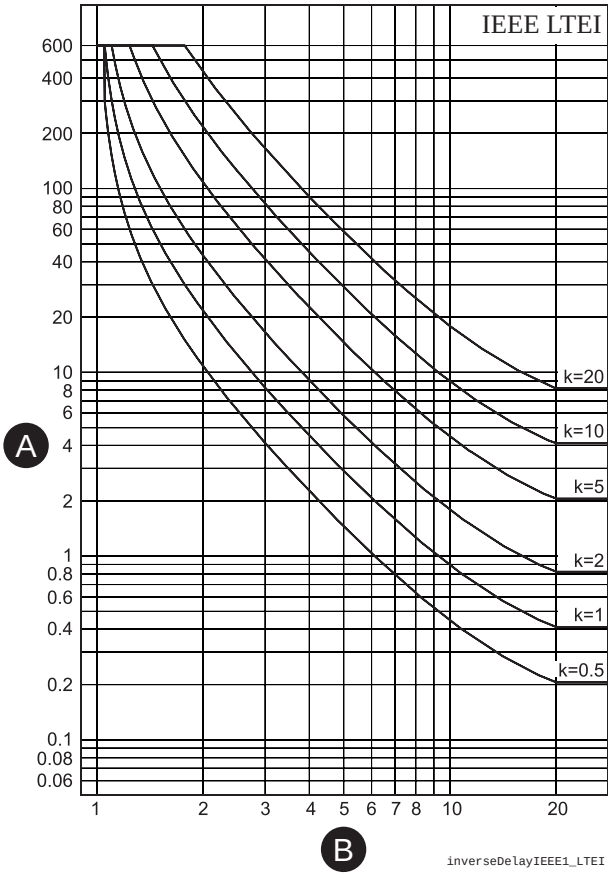

A. Delay (s) **B.** I / I_{set}

Figure 64 - ANSI/IEEE moderately inverse delay

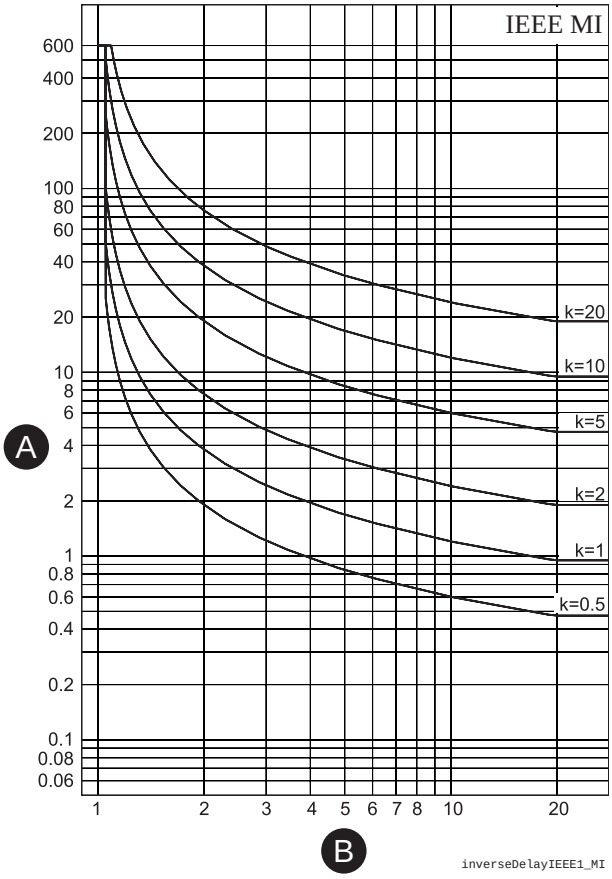

A. Delay (s) **B.** I / I_{set}

Figure 65 - ANSI/IEEE short time inverse delay

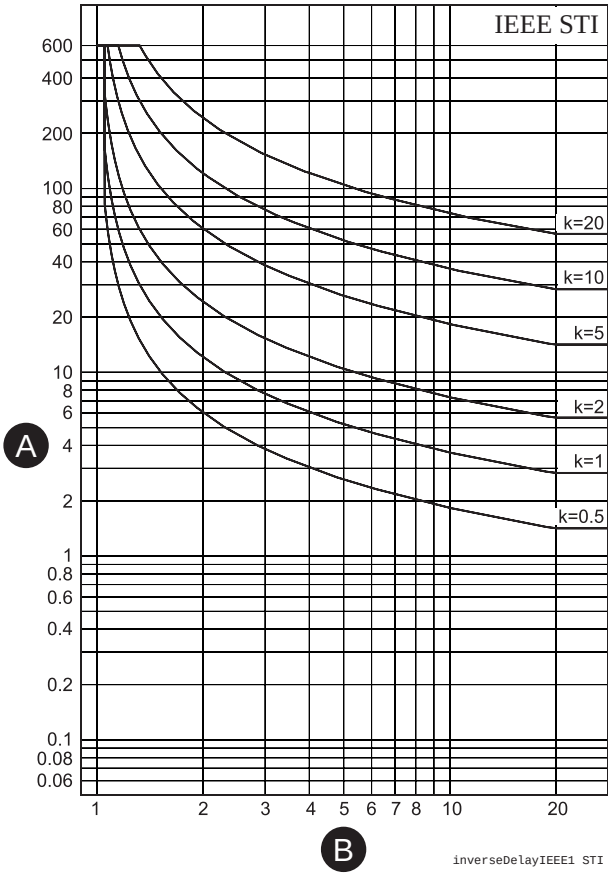

A. Delay (s) **B.** I / I_{set}

Figure 66 - ANSI/IEEE short time extremely inverse delay

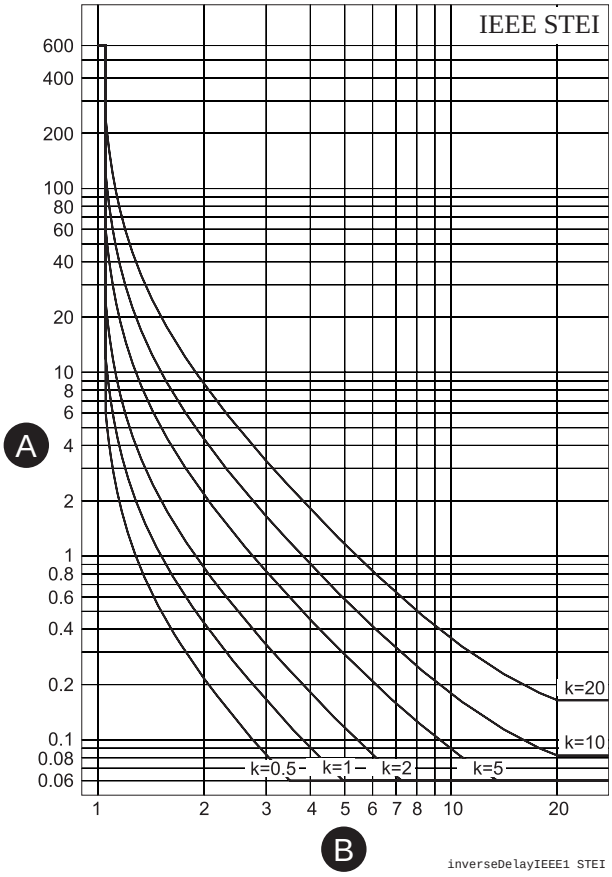

A. Delay (s) **B.** I / I_{set}

IEEE2 dependent operate time

Before the year 1996 and ANSI standard C37.112 microprocessor relays were using equations approximating the behavior of various induction disc type relays. A quite popular approximation is *Equation 10* which in PowerLogic P3 relays is called IEEE2. Another name could be IAC because the old General Electric IAC relays have been modeled using the same equation.

There are four different delay types according to *Table 56*. The old electromechanical induction disc relays have dependent delay for both trip and release operations. However, in PowerLogic P3 relays, only the trip time is dependent and the reset time is constant.

The operate delay depends on the measured value and other parameters according to *Equation 10*. Actually, this equation can only be used to draw graphs or when the measured value I is constant during the fault. A modified version is implemented in the relay for real-time usage.

Equation 10

$$t = k\left[A + \frac{B}{\left(\frac{I}{I_{START}} - C\right)} + \frac{D}{\left(\frac{I}{I_{START}} - C\right)^2} + \frac{E}{\left(\frac{I}{I_{START}} - C\right)^3}\right]$$

t = Operation delay in seconds

k = User's multiplier

I = Measured value

I_{START} = User's start setting

A, B, C, D = Constant parameter according to *Table 56*.

Table 56 - Constants for IEEE2 inverse delay equation

Delay type		Parameter				
		A	**B**	**C**	**D**	**E**
MI	Moderately inverse	0.1735	0.6791	0.8	-0.08	0.1271
NI	Normally inverse	0.0274	2.2614	0.3	-4.1899	9.1272
VI	Very inverse	0.0615	0.7989	0.34	-0.284	4.0505
EI	Extremely inverse	0.0399	0.2294	0.5	3.0094	0.7222

Example of the delay type "Moderately inverse (MI)":

k = 0.50

I = 4 pu

I_{START} = 2 pu

A = 0.1735

B = 0.6791

C = 0.8

D = -0.08

E = 0.127

Equation 11

$$t = 0.5 \cdot \left[0.1735 + \frac{0.6791}{\left(\frac{4}{2} - 0.8\right)} + \frac{-0.08}{\left(\frac{4}{2} - 0.8\right)^2} + \frac{0.127}{\left(\frac{4}{2} - 0.8\right)^3} \right] = 0.38$$

The operate time in this example is 0.38 seconds. The same result can be read from *Figure 67*.

Figure 67 - IEEE2 moderately inverse delay

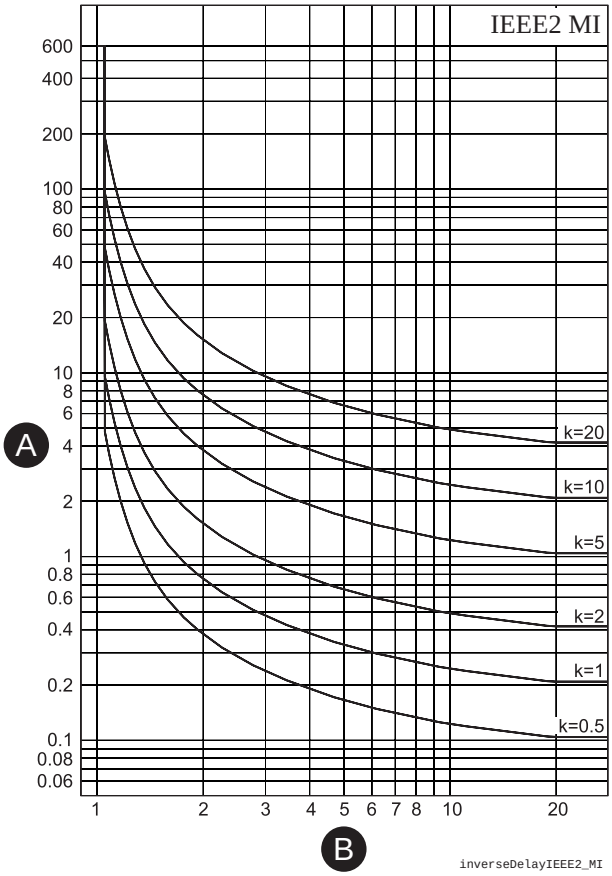

A. Delay (s) **B.** I / I_{set}

Figure 68 - IEEE2 normal inverse delay

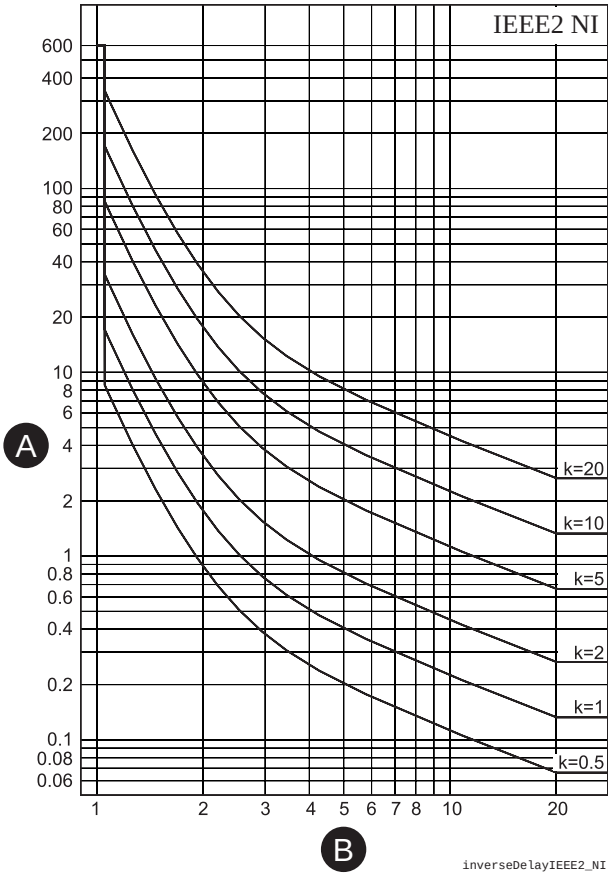

A. Delay (s) **B.** I / I_{set}

Figure 69 - IEEE2 very inverse delay

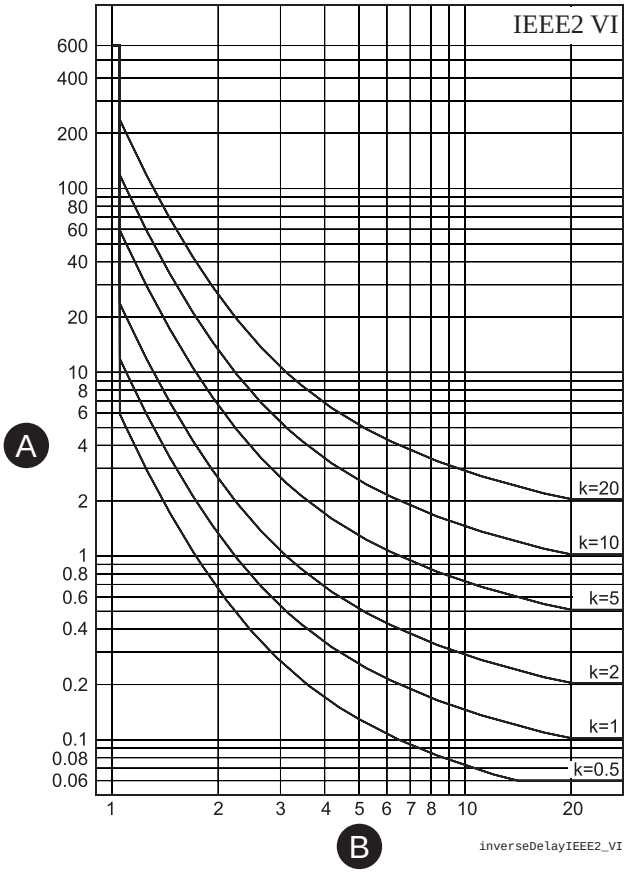

A. Delay (s) **B.** I / I_{set}

Figure 70 - IEEE2 extremely inverse delay

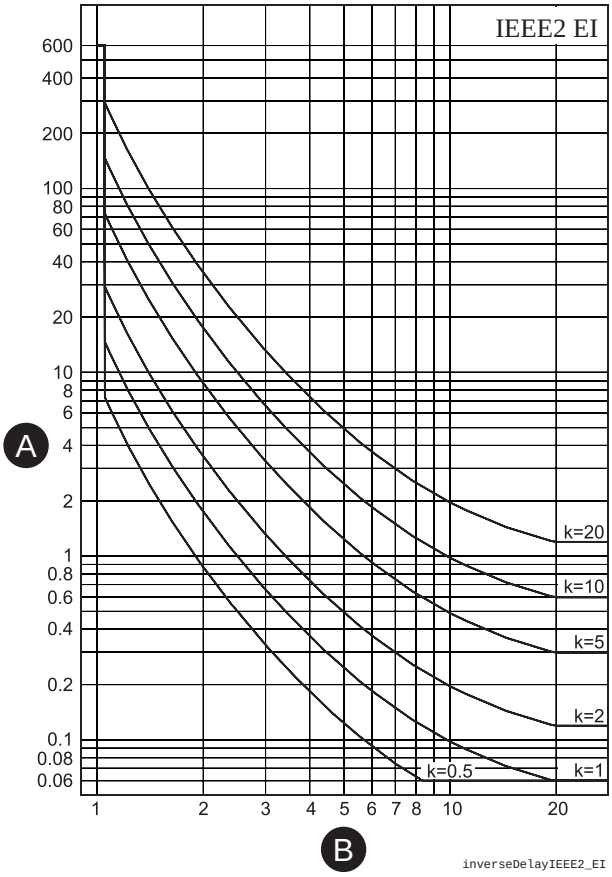

A. Delay (s) **B.** I / I_{set}

RI and RXIDG type dependent operate time

These two dependent delay types have their origin in old ASEA (nowadays ABB) earth fault relays.

The operate delay of types RI and RXIDG depends on the measured value and other parameters according to *Equation 12* and *Equation 13*. Actually, these equations can only be used to draw graphs or when the measured value I is constant during the fault. Modified versions are implemented in the relay for real-time usage.

Equation 12

$$t_{RI} = \frac{k}{0.339 - \frac{0.236}{\left(\frac{I}{I_{START}}\right)}}$$

Equation 13

$$t_{RXIDG} = 5.8 - 1.35 \ln \frac{I}{k\, I_{START}}$$

t = Operate delay in seconds

k = User's multiplier

I = Measured value

I_{START} = Start setting

Example of the delay type RI

k = 0.50

I = 4 pu

I_{START} = 2 pu

Equation 14

$$t_{RI} = \frac{0.5}{0.339 - \frac{0.236}{\left(\frac{4}{2}\right)}} = 2.3$$

The operate time in this example is 2.3 seconds. The same result can be read from *Figure 71*.

Example of the delay type RXIDG

k = 0.50

I = 4 pu

I_{START} = 2 pu

Equation 15

$$t_{RXIDG} = 5.8 - 1.35 \ln \frac{4}{0.5 \cdot 2} = 3.9$$

The operate time in this example is 3.9 seconds. The same result can be read from *Figure 72*.

Figure 71 - RI dependent delay

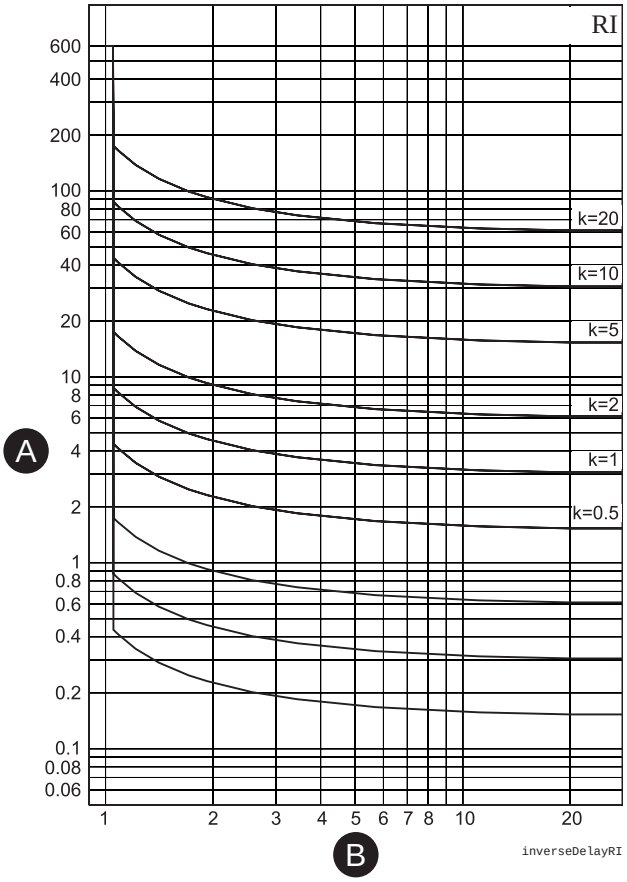

A. Delay (s) **B.** I / I_{set}

Figure 72 - RXIDG dependent delay

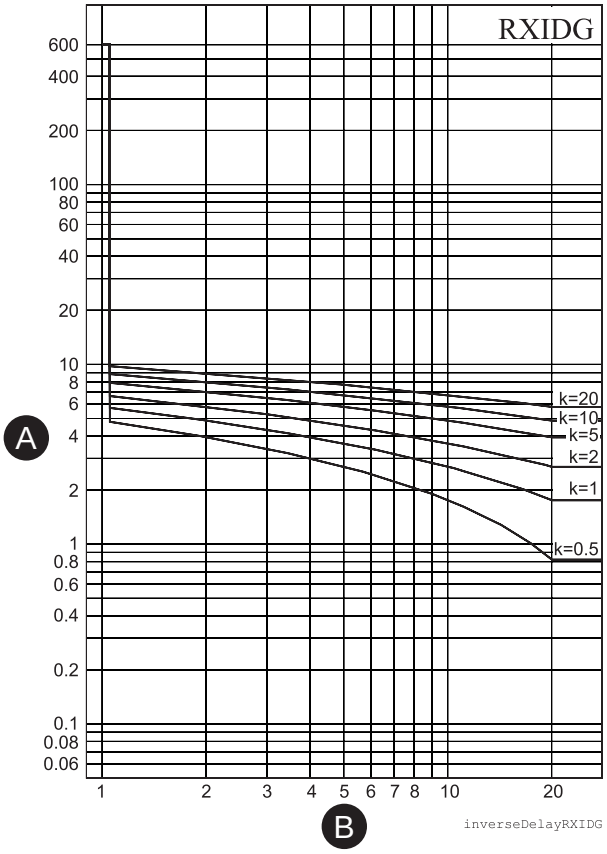

A. Delay (s) **B.** I / I_{set}

5.6.2 Free parameterization using IEC, IEEE and IEEE2 curves

This mode is activated by the setting delay type to ‘Parameters’, and then editing the delay function constants, that is, the parameters A – E. The idea is to use the standard equations with one’s own constants instead of the standardized constants as in the previous chapter.

Example of the GE-IAC51 delay type:

k = 0.50

I = 4 pu

I_{START} = 2 pu

A = 0.2078

B = 0.8630

C = 0.8000

D = - 0.4180

E = 0.1947

Equation 16

$$t = 0.5 \cdot \left[0.2078 + \frac{0.8630}{\left(\frac{4}{2} - 0.8\right)} + \frac{-0.4180}{\left(\frac{4}{2} - 0.8\right)^2} + \frac{0.1947}{\left(\frac{4}{2} - 0.8\right)^3} \right] = 0.37$$

The operate time in this example is 0.37 seconds.

The resulting time/current characteristic of this example matches quite well the characteristic of the old electromechanical IAC51 induction disc relay.

Dependent time setting error signal

The dependent time setting error signal actives if interpolation with the given parameters is not possible. See *5.6 Dependent operate time* for more details.

Limitations

The minimum definite time delay starts at the latest when the measured value is twenty times the setting. However, there are limitations at high setting values due to the measurement range. See *5.6 Dependent operate time* for more details.

5.6.3 Programmable dependent time curves

Programming dependent time curves requires eSetup Easergy Pro setting tool and rebooting the unit.

The [current, time] curve points are programmed using eSetup Easergy Pro PC program.

The user gives the desired current-time point in the form of a table. The listed points are used to interpolate all possible current-time values that fall between the given points.

Interpolation is septically designed to fit curves with inverse time nature. *Figure 73* depicts an example of the inverse time curve. Interpolation of non-inverse time curves is possible, but curve fitting is not as good as with inverse curves.

There are some rules for defining the curve points:

- the configuration must begin from the topmost line
- the line order must be as follows: the smallest current (longest operate time) on the top and the largest current (shortest operate time) on the bottom
- all unused lines (on the bottom) should be filled with [1.00 0.00s]
- given current-time points are recommended to have inverse time nature.

Figure 73 - Inverse and non-inverse curve

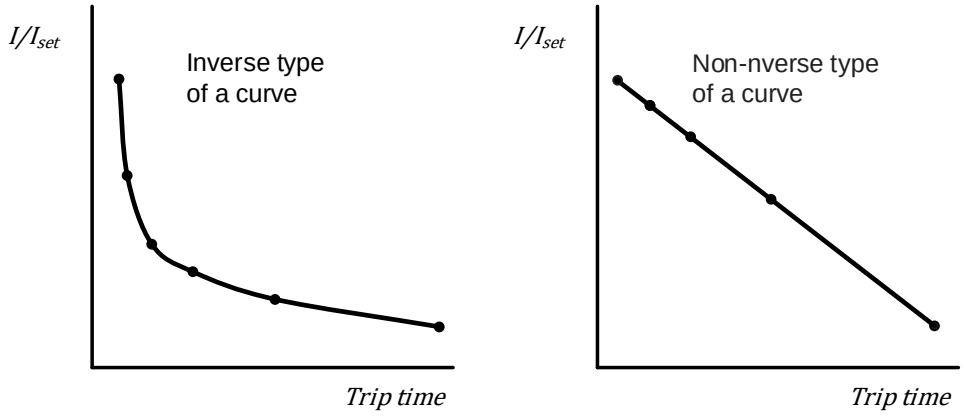

Here is an example configuration of curve points:

Point	Current I/I_{START}	Operate delay
1	1.00	10.00 s
2	2.00	6.50 s
3	5.00	4.00 s
4	10.00	3.00 s
5	20.00	2.00 s
6	40.00	1.00 s
7	1.00	0.00 s
8	1.00	0.00 s
9	1.00	0.00 s
10	1.00	0.00 s
11	1.00	0.00 s
12	1.00	0.00 s
13	1.00	0.00 s
14	1.00	0.00 s
15	1.00	0.00 s
16	1.00	0.00 s

Dependent time setting error signal

The dependent time setting error signal activates if interpolation with the given points fails. See *5.6 Dependent operate time* for more details.

Limitations

The minimum definite time delay starts at the latest when the measured value is twenty times the setting. However, there are limitations at high setting values due to the measurement range. See *5.6 Dependent operate time* for more details.

Programmable delay curve

This table is an example of the programmable dependent time curve.

	I in the curve		y in the curve
Point	**I/I_{START}**	**Op time (s)**	**Reciprocal of op time**
1	I_1 1.00	10.00	y_1 0.1
2	I_2 2.00	9.00	y_2 0.111111
3	I_3 3.00	8.00	y_3 0.125
4	4.00	7.00	0.142857
5	5.00	6.00	0.166667
6	6.00	5.00	0.2
7	7.00	4.00	0.25
8	10.00	1.00	1.00

Curve 1 for the first three points, point 1, point 2 and point 3, is like this.

$$\begin{cases} x = \dfrac{4*(I - I_1)}{I_3} \\ y = ax - bx^2 + y_1 \end{cases}$$

Using the first three points, we can then get the coefficients a, b.

$$a = \frac{I_3 * (y_{21} * I_{31}^2 - y_{31} * I_{21}^2)}{4 * I_{21} * I_{31} * I_{32}}$$

$$b = \frac{4a * I_3 * I_{31} - y_{31} * I_3^2}{16 * I_{31}^2}$$

Note: $I_{21} = I_2 - I_1$,

$y_{21} = y_2 - y_1$

etc.

Thus, we get the formula for curve 1 among the first three points.

All the I/I_{START} values between point 1 and point 3 can use this formula to get the operate time.

In the same way, using point 3, point 4 and point 5, we can get another formula for curve2 among these three points. In the formula, I_3 takes the place of I_1, I_5 takes the place of I_3, etc.

Using point 5, point 6 and point 7, we can get another formula for curve 3 among these three points.

Like in the table, at last if there is only one point left, to get the curve between point 7 and point 8, we must use point 6, point 7 and point 8 to get the formula.

But if the user only gives two points, like in the following table, then we get another point this way.

	I in the curve		**y in the curve**
Point	**I/I_{START}**	**Op time (s)**	**Reciprocal of op time**
1	I_1 1.00	10.00	y_1 0.1
	$I_2 = (I_1 + I_3) / 2 = 5.5$		$y_2 =(y_1 + y_3) / 2 =$ 0.55
2	I_3 10.00	1.00	y_3 1.0

In the end, there are two special things to clarify:

1. If you define N points in your curve, and when N is even, the curve for the test point between N-2 and N-1 is defined by N-2, N-1, N, and not by N-3, N-2, N-1.
2. If the test point current is lower than the first point, the operate time will be equal to the first point. If the test point current is higher than the last point, the operate time will be equal to the last point.

5.7 Synchrocheck (ANSI 25)

ANSI 25	Feeder	Motor
P3U20		
P3U30	x	x

Description

The relay includes a function that checks the synchronism before giving or enabling the circuit breaker close command. The function monitors the voltage amplitude, frequency and phase angle difference between two voltages. Since there are two stages available, it is possible to monitor three voltages. The voltages can be busbar and line or busbar and busbar (bus coupler).

Figure 74 - Synchrocheck function

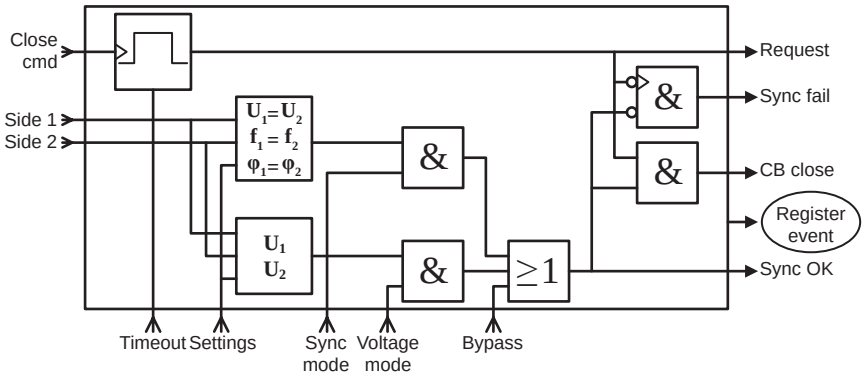

The synchrocheck stage includes two separate synchronism criteria that can be used separately or combined:

- voltage only
- voltage, frequency, and phase

The voltage check simply compares voltage conditions of the supervised objects. The supervised object is considered dead (not energized) when the measured voltage is below the U_{dead} setting limit. Similarly, the supervised object is considered live (energized) when the measured voltage is above the U_{live} setting limit. Based on the measured voltage conditions and the selected voltage check criteria, synchronism is declared.

When the network sections to be connected are part of the same network, the frequency and phase are the same. Therefore, the voltage check criteria is safe to use without frequency and phase check.

The frequency and phase check compares the voltages, frequency and phase of the supervised objects. Synchronism is declared if the voltages are above the U_{live} limit and all three difference criteria are within the given limits. This synchronism check is dynamic by nature, and the object close command is given at a certain moment of time, depending on the selected mode of operation.

When two networks are running at slightly different frequencies, there is also a phase difference between these two networks. Because of the different frequency, the phase angle tends to rotate. The time for one cycle depends on the frequency

difference. The stress for electrical components is lowest when two networks are connected at zero phase difference.

In the “Sync” mode, the circuit breaker closing is aimed at the moment of zero phase difference. Therefore, the close command is advanced by the time defined by the CB close time setting. In the “Async” mode, the circuit breaker closing is aimed at the moment when the synchronism conditions are met, that is, when the phase difference is within the given phase difference limit.

When two network sections to be connected are from different sources or generators, the voltage criteria alone is not safe, so also frequency and phase check must be used.

When two networks with different frequencies are to be connected, the request timeout setting must be long enough to allow the synchronism criteria to be met. For example, if the frequency difference is 0.1 Hz, the synchronism criteria is met only once in ten seconds.

The synchrocheck stage starts from an object close command that generates a request to close the selected circuit breaker (as per CONTROL SETTINGS view) when the synchronism conditions are met. The synchrocheck stage provides a "request" signal that is active from the stage start until the synchronism conditions are met or the request timeout has elapsed. When the synchronism conditions are not met within the request timeout, a “fail” pulse is generated. The fail pulse has a fixed length of 200 ms. When the synchronism conditions are met in a timely manner, the object close command is initiated for the selected object. This signal is purely internal and not available outside the synchrocheck stage. When the synchronism conditions are met, the “OK” signal is always active. The activation of the bypass input bybasses the synchronism check and declares synchronism at all times.

The request, OK, and fail signals are available in the output matrix.

The synchronized circuit breaker close execution order is shown in *Figure 75*.

Figure 75 - Synchrocheck execution order

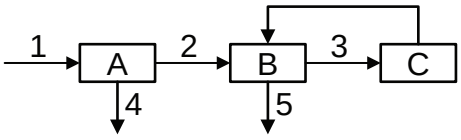

A. Synchrocheck stage

B. Object

C. Circuit breaker (physical) as selected in the CB Object 1 or CB Object 2 setting in the CONTROL SETTINGS view of the synchro-check stage.

NOTE: A synchronisim check is made only if a CB is selected in the CONTROL SETTING view.

1. Object close command from mimic, digital inputs or communication protocol
2. Synchronism declared
3. Circuit breaker close command
4. Sync fail signal if request timeout elapsed before synchronism conditions met
5. Object fail signal if CB failed to operate

Figure 76 - Synchrocheck function principle

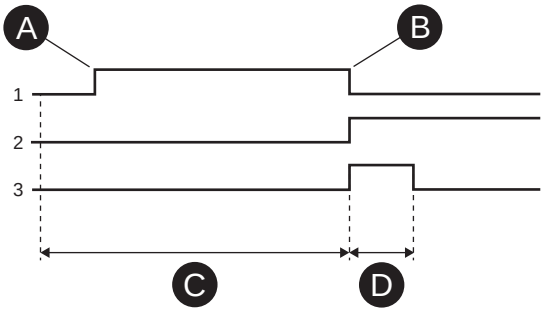

1. Sync request
2. Sync OK
3. Object close command

A. The object close command given (mimic or bus) actually only makes a sync request.

B. The sync request ends when the synchronism conditions are met and CB command is given or if the request timeout elapsed.

C. If the request timeout elapsed before synchronism conditions are met, sync fail pulse is generated.

D. Normal object close operation

The synchrocheck function is available when one of the following analog measurement modules and a suitable measuring mode are in use:

Table 57 - Voltage measuring modes

Voltage measuring mode	Number of synchrocheck stages
3LN+LLy	1
3LN+LNy	1
2LL+U_0+LLy	1
2LL+U_0+LNy	1
LL+U_0+LLy+LLz	2
LN+U_0+LNy+LNz	2

Table 58 - Voltage measuring modes with LPVT

Voltage measuring mode	Number of synchrocheck stages
3LN+LLy	1
3LN+LNy	1
LL+U_0+LLy+LLz	2
LN+U_0+LNy+LNz	2

Connections for synchrocheck

The voltage used for synchrochecking is always line-to-line voltage U_{12} even when U_{L1} is measured. The sychrocheck stage 1 always compares U_{12} with U_{12y}.

The compared voltages for the stage 2 can be selected (U_{12}/U_{12y}, U_{12}/U_{12z}, U_{12y}/U_{12z}). See *9.13 Voltage measurement modes*.

NOTE: To perform its operation, the synchrocheck stage 2 converts the voltages LNy and LNz to line-to-line voltage U12. As such, the measured voltage for LNy and LNz must be U1-N.

NOTE: The wiring of the secondary circuits of voltage transformers to the relay terminal depends on the selected voltage measuring mode.

See the synchrocheck stage's connection diagrams in *9.13 Voltage measurement modes*.

Characteristics

Table 59 - Synchrocheck function Δf, ΔU, Δφ (25)

Synchrocheck mode (S_{MODE})	Off; Async; Sync [39) 40) 41)]
Voltage check mode (U_{MODE})	DD; DL; LD; DD/DL; DD/LD; DL/LD; DD/DL/LD [42) 43) 44) 45)]
CB closing time	0.04–0.6 s
U_{DEAD} limit setting	10–120% U_N
U_{LIVE} limit setting	10–120% U_N
Frequency difference	0.01–1.00 Hz
Voltage difference	1–60% U_N
Phase angle difference	2°–90°
Request timeout	0.1–600.0 s
Stage operation range	46.0–64.0 Hz
Reset ratio (U)	0.97
Inaccuracy: - voltage - frequency - phase angle - operate time	 ±3% U_N ±20 mHz ±2° (when Δf < 0.2 Hz, else ±5°) ±1% or ±30 ms

[39)] Off – Frequency and phase criteria not in use
[40)] Async – d_F, d_U and d angle criteria are used. Circuit breaker close is aimed at the moment when the phase angle is within phase angle difference limit. Slip frequency d_F determines how much the close command needs to be advanced to make the actual connection at the moment when the phase angle is within the phase angle limit
[41)] Sync mode – d_F, d_U and d angle criteria are used. Circuit breaker close is aimed at the moment when the phase angle becomes zero. Slip frequency d_F determines how much the close command needs to be advanced to make the actual connection at zero phase angle.
[42)] The first letter refers to the reference voltage and the second letter to the comparison voltage.
[43)] D means that the side must be “dead” when closing (dead = The voltage is below the dead voltage limit setting).
[44)] L means that the side must be “live” when closing (live = The voltage is higher than the live voltage limit setting).
[45)] Example: DL mode for stage 1: The U12 side must be “dead” and the U12y side must be “live”.

5.8 Undervoltage (ANSI 27)

ANSI 27	Feeder	Motor
P3U20		
P3U30	x	x

Description

Undervoltage protection is used to detect voltage dips or sense abnormally low voltages to trip or trigger load shedding or load transfer. The function measures the three line-to-line voltages, and whenever the smallest of them drops below the start setting of a particular stage, this stage starts and a start signal is issued. If the fault situation remains on longer than the operate time delay setting, a trip signal is issued.

Blocking during voltage transformer fuse failure

As all the protection stages, the undervoltage function can be blocked with any internal or external signal using the block matrix. For example if the secondary voltage of one of the measuring transformers disappears because of a fuse failure (See the voltage transformer supervision function in *6.8 Voltage transformer supervision (ANSI 60FL)*). The blocking signal can also be a signal from the custom logic (see *4.7 Logic functions*).

Low-voltage self blocking

The stages can be blocked with a separate low-limit setting. With this setting, the particular stage is blocked when the biggest of the three line-to-line voltages drops below the given limit. The idea is to avoid unwanted tripping when the voltage is switched off. If the operate time is less than 0.08 s, the blocking level setting should not be less than 15% for the blocking action to be fast enough. The self blocking can be disabled by setting the low-voltage block limit equal to zero.

Figure 77 - Example of low-voltage self blocking

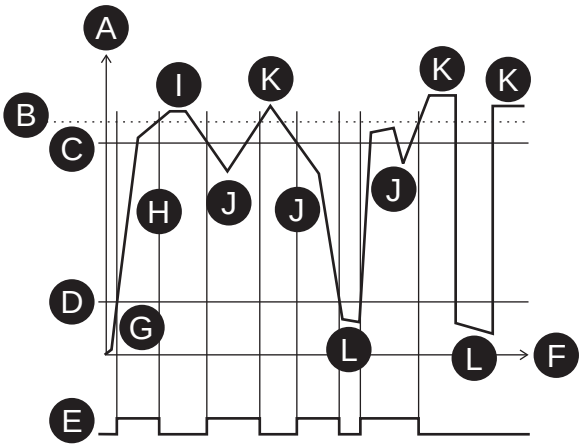

A. U_{LLmax} = max (U_{12}, U_{23}, U_{31})

B. Deadband

C. U< setting

D. Block limit

E. U< undervoltage state

F. Time

G. The maximum of the three line-to-line voltages U_{LLmax} is below the block limit. This is not regarded as an undervoltage situation.

H. The voltage U_{LLmax} is above the block limit but below the start level. This is an undervoltage situation.

I. The voltage is OK because it is above the start limit.

J. This is an undervoltage situation.

K. The voltage is OK.

L. The voltage U_{LLmax} is under the block limit and this is not regarded as an undervoltage situation.

Three independent stages

There are three separately adjustable stages: U<, U<< and U<<<. All these stages can be configured for the definite time (DT) operation characteristic.

Setting groups

There are four setting groups available for all stages.

Characteristics

Table 60 - Undervoltage U< (27)

Start value	20–120% U_N (step 1%)
Definite time characteristic: - Operate time	 0.08[46] – 300.00 s (step 0.02)
Hysteresis (reset ratio)	1.001–1.200 (0.1–20.0%, step 0.1%)
Self-blocking value of the undervoltage	0–80% U_N
Start time	Typically 60 ms
Release delay	0.06–300.00 s (step 0.02 s)
Reset time	< 95 ms
Overshoot time	< 50 ms
Reset ratio (Block limit)	0.5 V or 1.03 (3%)
Reset ratio	1.03 (depends on the hysteresis setting)
Inaccuracy: - Starting - Blocking - Operate time	 ±3% of the set value ±3% of set value or ±0.5 V ±1% or ±30 ms

[46] This is the instantaneous time, that is, the minimum total operate time including the fault detection time and the operate time of the trip contacts. Use the **Accept zero delay** setting in the protection stage setting view in eSetup Easergy Pro to accept the zero operate time setting for the DT function.

Table 61 - Undervoltage U<< (27)

Start value	20–120% U_N (step 1%)
Definite time characteristic: - Operate time	 0.06[47] – 300.00 s (step 0.02)
Hysteresis (reset ratio)	1.001–1.200 (0.1–20.0%, step 0.1%)
Self-blocking value of the undervoltage	0–80% U_N
Start time	Typically 60 ms
Reset time	< 95 ms
Overshoot time	< 50 ms
Reset ratio (Block limit)	0.5 V or 1.03 (3%)
Reset ratio	1.03 (depends on the hysteresis setting)
Inaccuracy: - Starting - Blocking - Operate time	 ±3% of the set value ±3% of set value or ±0.5 V ±1% or ±30 ms

[47] This is the instantaneous time, that is, the minimum total operate time including the fault detection time and the operate time of the trip contacts. Use the **Accept zero delay** setting in the protection stage setting view in eSetup Easergy Pro to accept the zero operate time setting for the DT function.

Table 62 - Undervoltage U<<< (27)

Start value	20–120% U_N (step 1%)
Definite time characteristic: - Operate time	 0.04[48] – 300.00 s (step 0.01)
Hysteresis (reset ratio)	1.001–1.200 (0.1–20.0%, step 0.1%)
Self-blocking value of the undervoltage	0–80% U_N
Start time	Typically 50 ms
Reset time	< 95 ms
Overshoot time	< 50 ms
Reset ratio (Block limit)	0.5 V or 1.03 (3%)
Reset ratio	1.03 (depends on the hysteresis setting)
Inaccuracy: - Starting - Blocking - Operate time	 ±3% of the set value ±3% of set value or ±0.5 V ±1% or ±25 ms

[48] This is the instantaneous time, that is, the minimum total operate time including the fault detection time and the operate time of the trip contacts. Use the **Accept zero delay** setting in the protection stage setting view in eSetup Easergy Pro to accept the zero operate time setting for the DT function.

5.9 Directional power (ANSI 32L, ANSI 32R)

ANSI 32L, ANSI 32R	Feeder	Motor
P3U20		
P3U30	x	x

Description

The directional power function can be used, for example, to disconnect a motor if the supply voltage is lost and thus prevent power generation by the motor. It can also be used to detect loss of load of a motor.

The directional power function is sensitive to active power. For the directional power function, the start value is negative. For the underpower function, a positive start value is used. Whenever the active power goes under the start value, the stage starts and issues a start signal. If the fault situation stays on longer than the delay setting, a trip signal is issued.

The start setting range is from -200% to +200% of the nominal shaft power P_M. If the P_M value is not known, set it equal to the machine's nominal power. The directional power stages use this value as reference for 1.00 per unit.

There are two identical stages available with independent setting parameters.

Setting groups

There are four setting groups available for all stages.

Characteristics

Table 63 - Directional power stages P<, P<< (32L, 32R)

Start value	-200.0 to +200.0% P_M (step 0.5)
Definite time function: - Operate time	 0.3–300.0 s (step 0.1)
Start time	Typically 200 ms
Reset time	< 500 ms
Reset ratio	1.05
Inaccuracy: - Starting - Operate time at definite time function	- ±3% of set value or ±0.5% of rated value ±1% or ±150 ms

NOTE: When the start setting is +1 to +200% , an internal block is activated if the maximum voltage of all phases drops below 5% of rated.

5.10 Phase undercurrent (ANSI 37)

ANSI 37	Feeder	Motor
P3U20	x	x
P3U30	x	x

Description

The phase undercurrent stage measures the fundamental component of the phase currents.

The stage I< can be configured for definite time characteristic.

The undercurrent stage protects rather the relay driven by the motor, for example a submersible pump, than the motor itself.

Setting groups

There are four setting groups available for each stage.

Characteristics

Table 64 - Phase undercurrent I< (37)

Current setting range	20 – 70 %I_N or %I_{MOT} (step 1%)
Definite time characteristic: - operate time	- 0.3 – 300.0 s (step 0.1)
Block limit	15 % (fixed)
Start time	Typically 200 ms
Reset time	< 450 ms
Reset ratio	>1.05
Accuracy: - Starting - Operate time	- ±2% of set value or ±0.5% of the rated value ±1 % or ±150 ms

NOTE: Stage Blocking is functional when all phase currents are below the block limit.

5.11 Broken conductor (ANSI 46BC)

ANSI 46BC	Feeder	Motor
P3U20	x	
P3U30	x	

Description

The purpose of the unbalance stage is to detect unbalanced load conditions, for example a broken conductor of a heavy-loaded overhead line if there is no earth fault. The operation of the unbalanced load function is based on the negative phase sequence component I_2 related to the positive phase sequence component I_1. This is calculated from the phase currents using the method of symmetrical components. The function requires that the measuring inputs are connected correctly so that the rotation direction of the phase currents are as in *9.6.7 Connection examples*. The unbalance protection has definite time operation characteristic.

Equation 17

$$K2 = \frac{I_2}{I_1}$$

$I_1 = I_{L1} + aI_{L2} + a^2I_{L3}$

$I_2 = I_{L1} + a^2I_{L2} + aI_{L3}$

Equation 18

$$\underline{a} = 1\angle 120° = -\frac{1}{2} + j\frac{\sqrt{3}}{2}$$

, a phasor rotating constant

Characteristics

Table 65 - Broken conductor (46BC) in feeder mode

Settings: - Setting range I_2 / I_1>	2–70% (step 1%)
Definite time function: - Operate time	1.0–600.0 s (step 0.1 s)
Start time	Typically 300 ms
Reset time	< 450 ms

Reset ratio	0.95
Inaccuracy: - Starting - Operate time	- ±1% - unit ±5% or ±200 ms

5.12 Negative sequence overcurrent (ANSI 46)

ANSI 46	Feeder	Motor
P3U20		x
P3U30		x

Description

Negative sequence overcurrent in a motor causes double frequency currents in the rotor. This warms up the surface of the rotor, and the available thermal capacity of the rotor is much less than the thermal capacity of the whole motor. Thus, RMS-current-based overload protection (see *5.16 Thermal overload (ANSI 49 RMS)*) is not capable of protecting a motor against negative sequence overcurrent.

The negative sequence overcurrent protection is based on the negative sequence of the base frequency phase currents. Both definite time and dependent time characteristics are available.

Dependent time delay

The dependent time delay is based on the following equation:

Equation 19

$$T = \frac{K_1}{\left(\frac{I_2}{I_{MOT}}\right)^2 - K_2^2}$$

T = Operate time

K_1 = Delay multiplier

I_2 = Measured and calculated negative sequence phase current of fundamental frequency

K_2 = Start setting I_2 > in pu. The maximum allowed degree of unbalance.

Example

K_1 = 15 s

I_2 = 22.9 % = 0.229 x I_{MOT}

K_2 = 5 % = 0.05 x I_{MOT}

$$t = \frac{15}{\left(\frac{0.229}{1}\right)^2 - 0.05^2} = 300.4$$

The operate time in this example is five minutes.

More stages (definite time delay only)

If more than one definite time delay stages are needed for negative sequence overcurrent protection, the freely programmable stages can be used (*5.41 Programmable stages (ANSI 99)*).

Figure 78 - Dependent operation delay of negative sequence overcurrent I_2 > (ANSI 46). The longest delay is limited to 1000 seconds (=16min 40s).

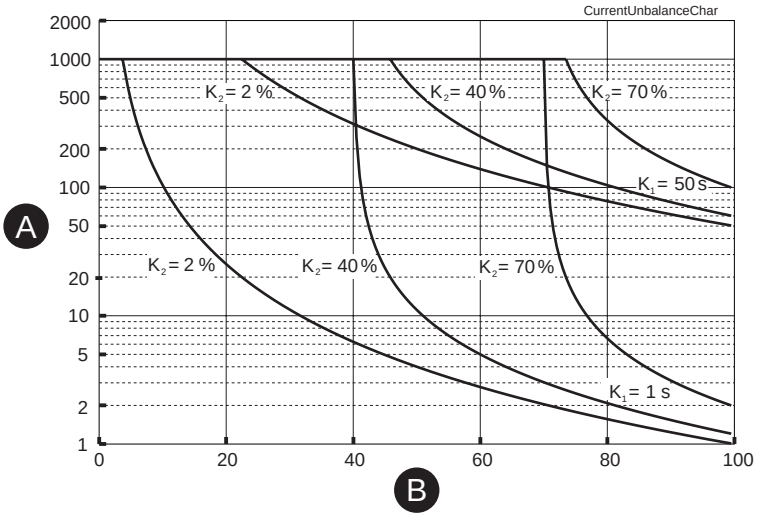

A. Operate time (s) **B.** Negative sequence current I_2%

Setting groups

There are four setting groups available.

Characteristics

Table 66 - Negative sequence overcurrent I_2 > (46) in motor mode

Start value	2–70% (step 1%)
Definite time characteristic: - Operate time	 1.0–600.0 s (step 0.1 s)
Dependent time characteristic: - 1 characteristic curve - Time multiplier - Upper limit for dependent time	 Inv 1–50 s (step 1) 1000 s
Start time	Typically 300 ms
Reset time	< 450 ms
Reset ratio	0.95
Inaccuracy: - Starting - Operate time	 ±1% - unit ±5% or ±200 ms

NOTE: The stage is operational when all secondary currents are above 250 mA.

5.13 Incorrect phase sequence (ANSI 47)

ANSI 47	Feeder	Motor
P3U20		x
P3U30		x

Description

The incorrect phase sequence detection prevents the motor from being started to wrong direction, thus protecting the load.

When the ratio between negative and positive sequence current exceeds 80% and the average of three phase currents exceeds 0.2 x I_{MOT} in the start-up situation, the phase sequence stage starts and trips 100 ms after start-up.

Setting groups

This stage has one setting group.

Characteristics

Table 67 - Incorrect phase sequence I_2>> (47)

Setting:	80 % (fixed)
Operate time	<120 ms
Reset time	< 105 ms

NOTE: Stage is blocked when motor has been running for 2 seconds.

Stage is operational only when least one of the currents is above 0.2 x I_{MOT}

5.14 Negative sequence overvoltage protection (ANSI 47)

ANSI 47	Feeder	Motor
P3U20		
P3U30	x	x

Description

This protection stage can be used to detect voltage unbalance and phase reversal situations. It calculates the fundamental frequency value of the negative sequence component U_2 based on the measured voltages (for calculation of U_2, see *3.10 Symmetrical components*).

Whenever the negative sequence voltage U_2 raises above the user's start setting of a particular stage, this stage starts, and a start signal is issued. If the fault situation remains on longer than the user's operate time delay setting, a trip signal is issued.

Blocking during VT fuse failure

Like all the protection stages, the negative sequence overvoltage can be blocked with any internal or external signal using the block matrix, for example, if the secondary voltage of one of the measuring transformers disappears because of a fuse failure (See VT supervision function in *6.8 Voltage transformer supervision (ANSI 60FL)*).

The blocking signal can also be a signal from the user's logic (see *4.7 Logic functions*).

Three independent stages

There are three separately adjustable stages: U_2>, U_2>>, and U_2>>>. Both stages can be configured for the definite time (DT) operation characteristic.

Setting groups

There are four settings groups available for all stages. Switching between setting groups can be controlled by digital inputs, virtual inputs (mimic display, communication, logic) and manually.

Characteristics

Table 68 - Negative sequence overvoltage protection U_2> (47)

Start value: U_2>, U_2>>, U_2>>>	2–120%
Operate time	0.08–300 s
Reset ratio	0.95
Inaccuracy: - Starting - Operate time	 ±1% - unit ±5% or ±200 ms

5.15 Motor start-up supervision (ANSI 48)

ANSI 48	Feeder	Motor
P3U20		x
P3U30		x

Description

The motor start-up supervision I_{ST}> protects the motor against prolonged direct-on-line (DOL) starts caused by, for example, a stalled rotor, too high inertia of the load or too low voltage. It measures the fundamental frequency component of the phase currents.

The I_{ST}> stage can be configured for definite operate time or dependent operate time characteristic. For a weak voltage supply, the dependent characteristic is useful allowing more start time when a voltage drop decreases the start current and increases the start time. *Equation 20* defines the dependent operate time. *Figure 79* shows an example of the dependent characteristic.

Figure 79 - Example of a dependent operate time delay of the motor start-up supervision stage

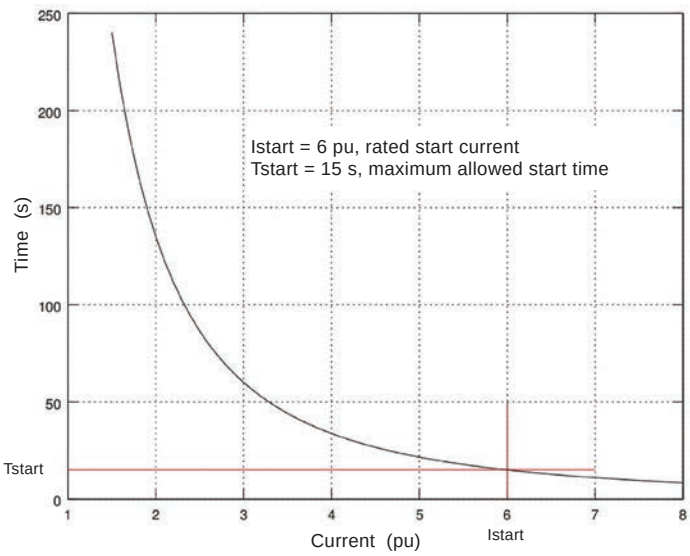

If the measured current is less than the specified start current I_{START}, the operate time is longer than the specified start time T_{START} and vice versa.

Equation 20

$$T = \left(\frac{I_{START}}{I_{MEAS}}\right)^2 T_{START}$$

T = Dependent operate time

I_{START} = Rated start current of the motor “Nom motor start current I_{MOTST}. The default setting is 6.00xI_{MOT}.

I_{MEAS} = Measured current

T_{START} = Maximum allowed start time “Inv. time coefficient” k> for the motor at rated voltage

The start setting “Motor start detection current” I_{ST} > is the start detection level of the start current. When the current has been less than 10% of I_{MOT} and then within 200 milliseconds exceeds the setting I_{ST} >, the motor start-up supervision stage starts to count the operate time T_{START}. When the current drops below 120 % x I_{MOT}, the motor start-up supervision stage releases. The motor start-up supervision is only active during the starting of the motor.

Block diagram

Figure 80 - Block diagram of motor start-up supervision I_{ST}>

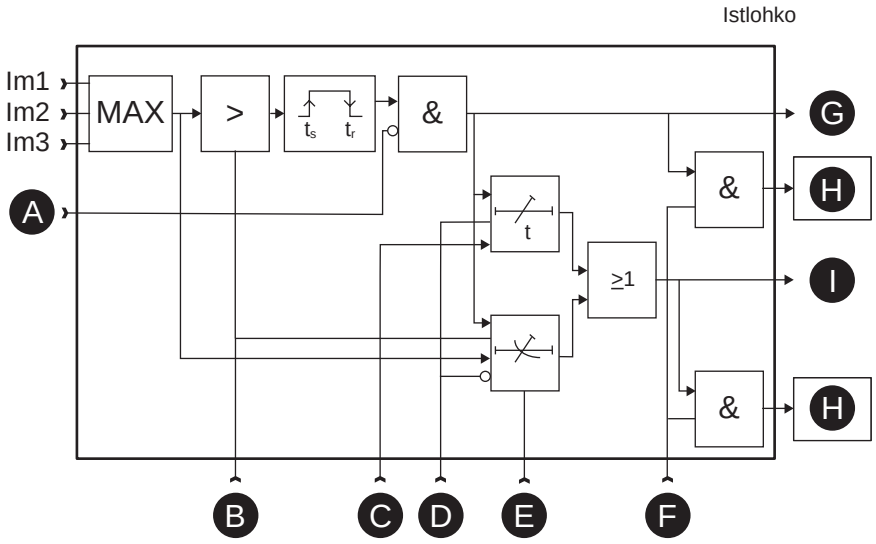

A. Block
B. Motor nominal start current
C. Delay
D. Definite / dependent time
E. Dependent delay
F. Enable events
G. Start
H. Register event
I. Trip

Motor status view

There are three possible statuses for a motor.

- Motor stopped: the motor average current is less than 10% of the motor nominal current (I_{MOT}).
- Motor starting: To reach the starting position, the motor has to be stopped for at least 500 ms before starting. The average motor current has to increase above the motor start detection current (setting value) within 200 ms. The motor remains starting as long as the terms for turning into running condition are not fulfilled.
- Motor running: The motor can change to the running position from both stopped and starting position. The low limit for motor running is 20% and the high limit 120% of I_{MOT}.

The motor status can be viewed via eSetup Easergy Pro software or via the device's front panel (Mstat). The starting and running statuses can be found on

the output and block matrix. Therefore, it is possible to use these signals for tripping or indication and for blocking purposes.

Figure 81 - Motor status via eSetup Easergy Pro and local panel

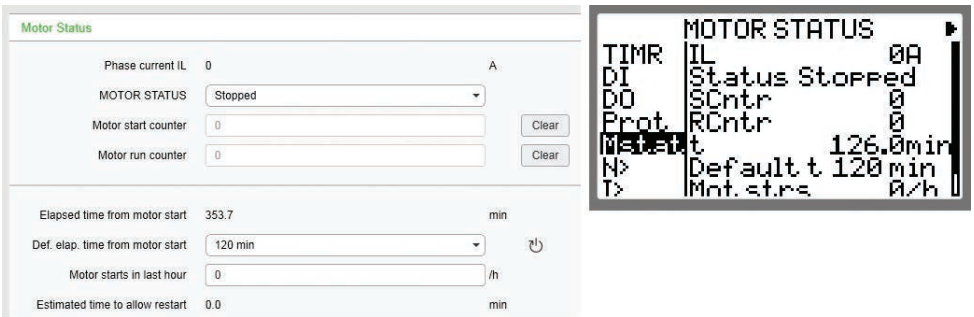

Figure 82 - Motor status in output and block matrix

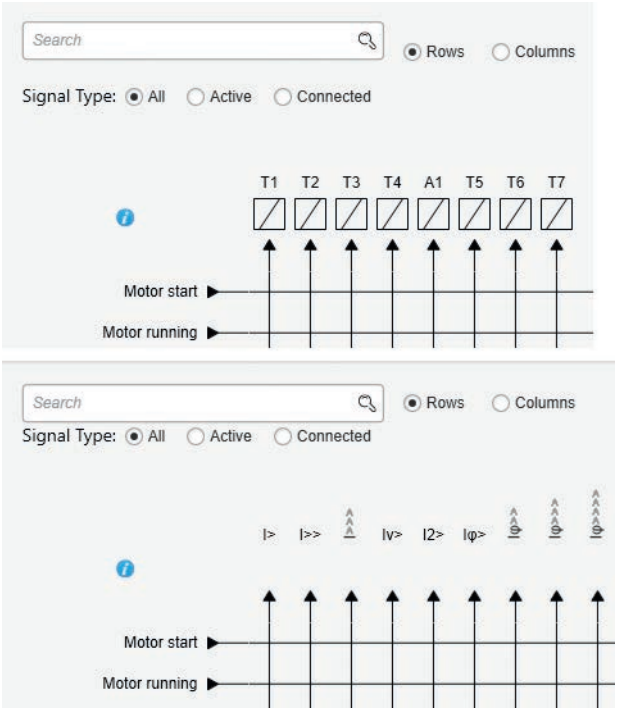

Normal starting sequence

The default value for the motor start detection is six times the motor nominal value. The motor current is

$$\frac{IL1+IL2+IL3}{3}$$

Figure 83 - Normal starting sequence

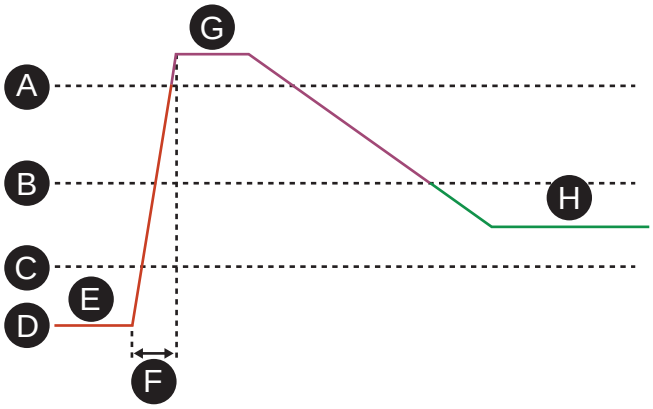

A. Motor start detection current
B. Motor running high limit (120% of I_{MOT})
C. Motor stopped limit (10% of I_{MOT})
D. Motor current
E. Stopped for 500 ms before starting
F. Motor current exceeds the start detection current (200 ms)
G. Starting
H. Running

Soft start

Frequency converter drives and soft starter applications do not initiate the motor start signal because of the low current during motor start. The motor changes directly from stopped to running position when the current increases to a certain level.

The motor current is

$$\frac{IL1+IL2+IL3}{3}$$

Figure 84 - Soft starting sequence

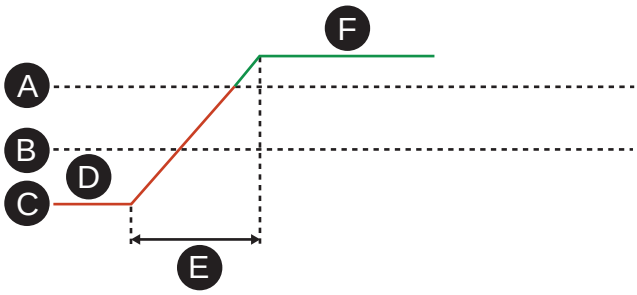

A Motor running limit (20% of I_{MOT})
B. Motor stopped limit (10% of I_{MOT})
C. Motor current
D. Stopped for 500 ms
E. Motor current exceeds the motor running limit (200 ms)
F. Running

Setting groups

This stage has one setting group.

Characteristics

Table 69 - Motor start-up supervision (48) in motor mode

Setting range: - Motor start detection current, I_{ST}> - Nominal motor start current, I_{MOTST}	- 1.30–10.00 x I_{MOT} (step 0.01) 1.50–10.00 x I_{MOT} (step 0.01)
Delay type	DT, INV
Definite time characteristic (DT): - operate time	- 1.0–300.0 s (step 0.1) [49)]
Dependent time characteristic (INV): - operate delay - dependent time coefficient, k	- 1.0–300.0 s (step 0.1) 1.0–200.0 s (step 0.1)
Minimum motor stop time to activate motor start-up supervision	500 ms
Maximum current raise time from motor stop to start	200 ms
Motor stopped limit	0.10 x I_{MOT}
Motor running lower limit	0.20 x I_{MOT}
Motor running limit after starting	1.20 x I_{MOT}
Start time	Typically 60 ms
Reset time	<95 ms
Reset ratio	<0.95
Inaccuracy: - Starting - Operate time at definite time function - Operate time at IDMT function	- ±3% of the set value or 5 mA secondary ±1% or at ±30 ms ±5% or at least ±30 ms

[49)] This is the instantaneous time i.e. the minimum total operational time including the fault detection time and operation time of the trip contacts.

NOTE: Motor stopped and running limits are based on the average of three phase currents.

5.16 Thermal overload (ANSI 49 RMS)

ANSI 49M	Feeder	Motor
P3U20		x
P3U30		x

ANSI 49F	Feeder	Motor
P3U20	x	
P3U30	x	

Description

The thermal overload function (ANSI 49F) protects cables in the feeder mode against excessive heating.

The thermal overload function (ANSI 49M) protects the motor in the motor mode against excessive heating.

Thermal model

The temperature is calculated using RMS values of phase currents and a thermal model according IEC60255-149. The RMS values are calculated using harmonic components up to the 15th.

Trip time:

$$t = \tau \cdot \ln \frac{I^2 - I_P{}^2}{I^2 - a^2}$$

Alarm (alarm 60% = 0.6):

$$a = k \cdot k_\Theta \cdot I_{MODE} \cdot \sqrt{alarm}$$

Trip:

$$a = k \cdot k_\Theta \cdot I_{MODE}$$

Reset time:

$$t = \tau \cdot C_\tau \cdot \ln \frac{I_P{}^2}{a^2 - I^2}$$

Trip release:

$$a = \sqrt{0.95} \times k \times I_{MODE}$$

Start release (alarm 60% = 0.6):

$$a = \sqrt{0.95} \times k \times I_{MODE} \times \sqrt{alarm}$$

T = Operate time

τ = Thermal time constant tau (setting value). Unit: minute

ln = Natural logarithm function

I =Measured RMS phase current (the max. value of three phase currents)

k = Overload factor (Maximum continuous current), i.e. service factor (setting value).

kΘ = Ambient temperature factor (permitted current due to tamb).

Ip = Preload current, $I_P = \sqrt{\theta} \times k \times I_{MODE}$ (If temperature rise is 120% -> θ = 1.2). This parameter is the memory of the algorithm and corresponds to the actual temperature rise.

I_{MODE} = The rated current (I_N or I_{MOT})

C_τ = Relay cooling time constant (setting value)

Time constant for cooling situation (ANSI 49F)

If the cable cooling is slower than in normal operational conditions a coefficient C_T can be used as cooling time constant, when current is less than 0.3 x I_N.

Time constant for cooling situation (ANSI 49M)

If the motor's fan is stopped, the cooling is slower than with an active fan. Therefore, there is a coefficient C_T for thermal constant available to be used as cooling time constant when the current is less than 0.3 x I_{MOT}.

Heat capacitance, service factor and ambient temperature

The trip level is determined by the maximum allowed continuous current I_{MAX} corresponding to the 100% temperature rise Θ_{TRIP} for example the heat capacitance of the motor (ANSI 49M) or cable (ANSI 49F). I_{MAX} depends of the given service factor k and ambient temperature Θ_{AMB} and settings I_{MAX40} and I_{MAX70} according the following equation.

$$I_{\mathrm{MAX}} = k \cdot k_{\Theta} \cdot I_{MODE}$$

The value of ambient temperature compensation factor kΘ depends on the ambient temperature Θ_{AMB} and settings I_{MAX40} and I_{MAX70}. See *Figure 85*.
Ambient temperature is not in use when kΘ = 1. This is true when

- I_{MAX40} is 1.0
- Samb is “n/a” (no ambient temperature sensor)
- ΘAMB is +40 °C.

Figure 85 - Ambient temperature correction of the overload stage T>

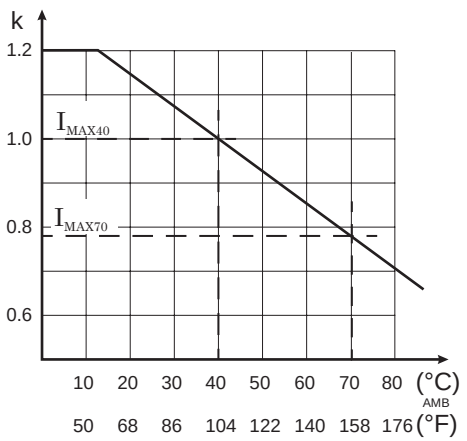

Example of the thermal model behavior

Figure 85 shows an example of the thermal model behavior. In this example, τ = 30 minutes, k = 1.06 and kΘ = 1 and the current has been zero for a long time and thus the initial temperature rise is 0%. At time = 50 minutes, the current changes to 0.85 x I_N or x I_{MOT} and the temperature rise starts to approach value $(0.85/1.06)^2$ = 64% according to the time constant. At time = 300 min, the temperature is nearly stable, and the current increases to 5% over the maximum defined by the rated current and the service factor k. The temperature rise starts to approach value 110%. At about 340 minutes, the temperature rise is 100% and a trip follows.

Initial temperature rise after restart

When the relay is switched on, an initial temperature rise of 70% is used. Depending on the actual current, the calculated temperature rise then starts to approach the final value.

Alarm function

The thermal overload stage is provided with a separately settable alarm function. When the alarm limit is reached, the stage activates its start signal.

Figure 86 - Example of the thermal model behavior

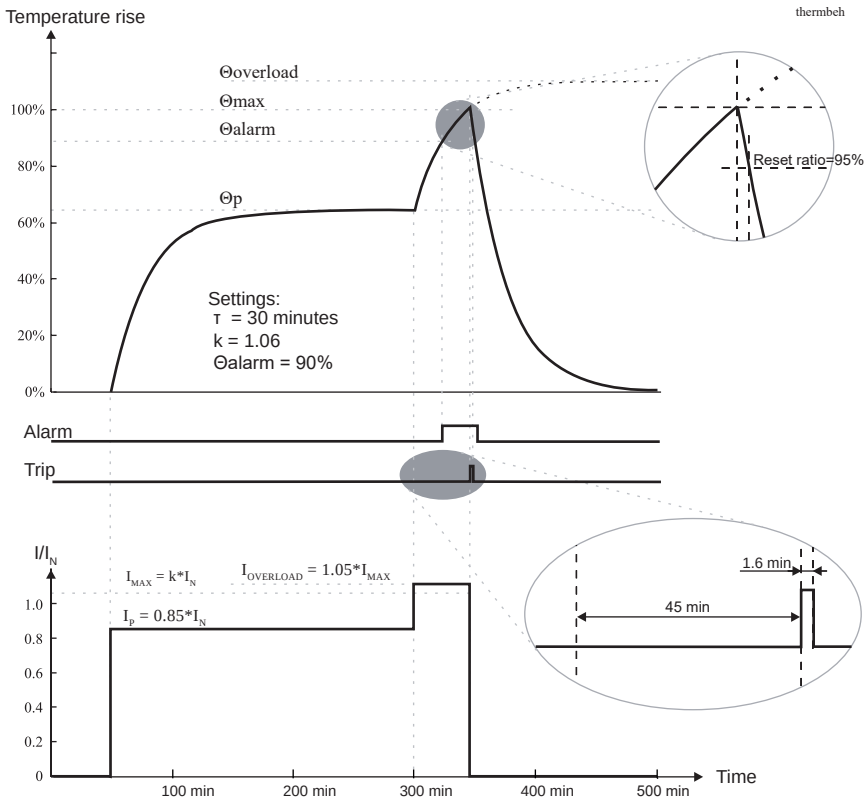

Setting groups

This stage has one setting group.

Characteristics

Table 70 - Thermal overload(49F/49M)

Maximum continuous current	0.1–2.40 x I_N or I_{MOT}(step 0.01)
Alarm setting range	60–99% (step 1%)
Time constant τ	2–180 min (step 1)
Cooling time coefficient	1.0–10.0 x τ (step 0.1)
Max. overload at +40°C	70–120 %I_N or %I_{MOT} (step 1)
Max. overload at +70°C	50–100 %I_N or %I_{MOT} (step 1)
Ambient temperature	-55 – 125°C (step 1°)
Reset ratio (Start & trip)	0.95
Operate time inaccuracy	Relative inaccuracy ±5% or absolute inaccuracy 1 s of the theoretical value

5.17 Breaker failure (ANSI 50BF)

ANSI 50BF	Feeder	Motor
P3U20	x	x
P3U30	x	x

Description

The circuit breaker failure protection stage (CBFP) can be used to operate any upstream circuit breaker (CB) if the programmed output matrix signals, selected to control the main breaker, have not disappeared within a given time after the initial command. The supervised output contact is defined by the “Monitored Trip Relay” setting. An alternative output contact of the relay must be used for this backup control selected in the **Output matrix** setting view.

The CBFP operation is based on the supervision of the signal to the selected output contact and the time. The following output matrix signals, when programmed into use, start the CBFP function:

- protection functions
- control functions
- supporting functions
- GOOSE signals (through communication)

If the signal is longer than the CBFP stage’s operate time, the stage activates another output contact defined in the **Output matrix** setting view. The output contact remains activated until the signal resets. The CBFP stage supervises all the signals assigned to the same selected output contact.

In *Figure 87*, both the trip and CBFP start signals activate simultaneously (left picture). If T> trip fails to control the CB through T1, the CBFP activates T3 after the breaker failure operate time.

Figure 87 - Trip and CBFP start signals in the **Output matrix** view

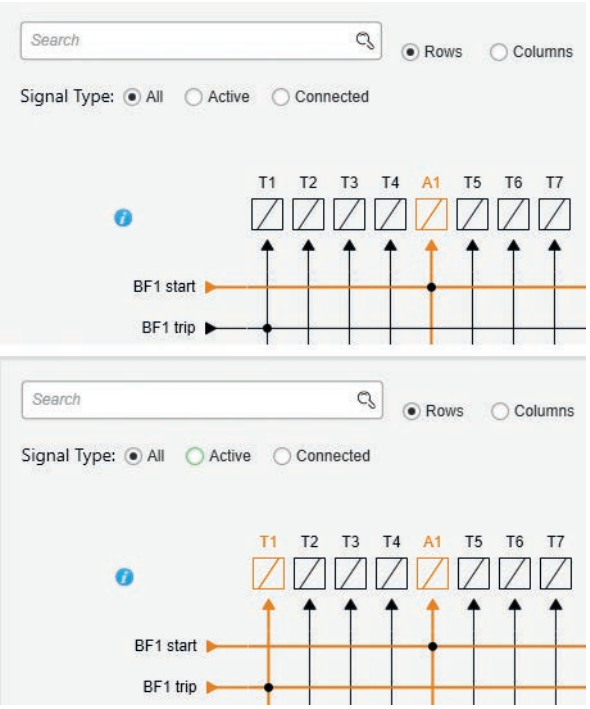

NOTE: For the CBFP, always select the ”Connected” crossing symbol in the **Output matrix** setting view.

Characteristics

Table 71 - Breaker failure (50BF)

Relay to be supervised	T1–T7 (depending on the order code)
Definite time function: - Operate time	 0.1–10.0 s (step 0.1 s)
Inaccuracy: - Operate time	 ±20 ms

5.18 Breaker failure 1 and 2 (ANSI 50BF)

ANSI 50BF	Feeder	Motor
P3U20	x	x
P3U30	x	x

PowerLogic P3 has two identical Breaker failure 1 (ANSI 50BF) and Breaker failure 2 (ANSI 50BF) stages.

Description

Power system protection should always have some sort of backup protection available. Backup protection is intended to operate when a power system fault is not cleared or an abnormal condition is not detected in the required time because of a failure or the inability of the primary protection to operate or failure of the appropriate circuit breakers to trip. Backup protection may be local or remote.

Circuit breaker failure protection (CBFP) is part of the local backup protection. CBFP provides a backup trip signal to an upstream circuit breaker (CB) when the CB nearest to fault fails to clear fault current. The CB may fail to operate for several reasons, for example burnt open coil or a flashover in the CB.

Figure 88 - CBFP implementation

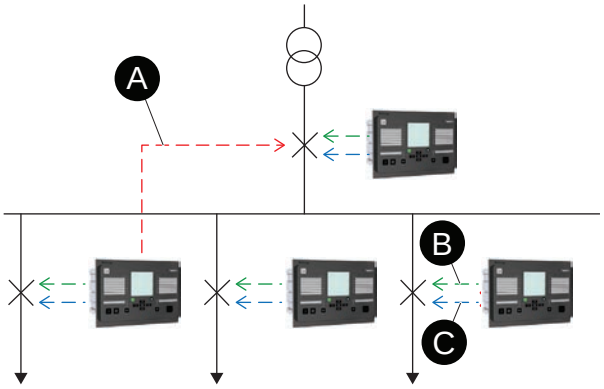

A. CBFP trip **C.** Re-trip
B. Normal trip

Two separate stages are provided to enable re-trip and CBFP trip commands. The first stage can be used to give re-trip command (for example to control second/backup open coil of the main CB) while the second stage can give dedicated CBFP trip command to an upstream circuit breaker. Select the required outputs for re-trip and CBFP trip through the output matrix.

Block diagram

Figure 89 - Breaker failure 2 operation

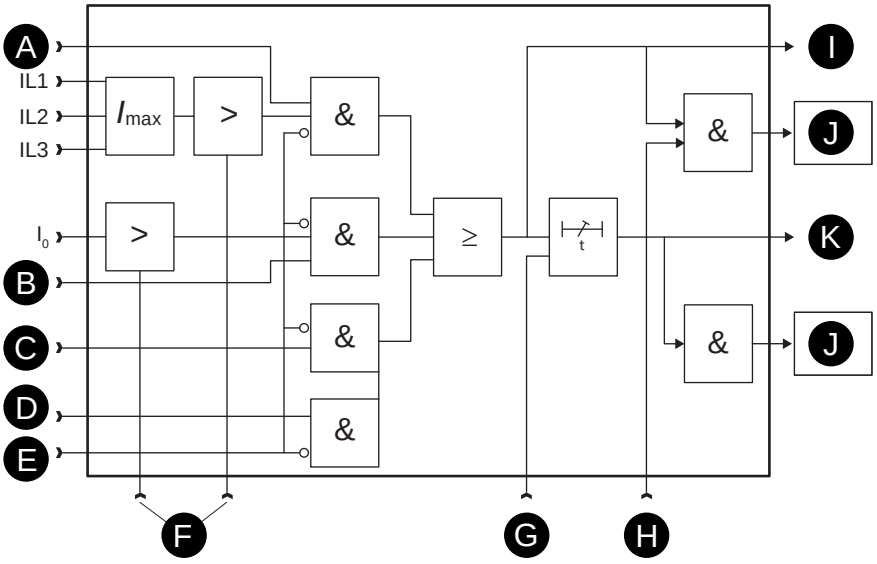

A. Condition 1
B. Condition 2
C. Condition 3
D. Condition 4
E. Block
F. Zero-current setting
G. Delay setting
H. Enable events setting
I. Start
J. Event register
K. Trip

CBFP operation

The CBFP function can be enabled and disabled with the **Enable for BF2** selection. The CBFP function activates when any of the selected start signals becomes and stays active.

The CBFP operation can be temporarily blocked by the stage block signal from the block matrix. When the stage is blocked by the block signal, the stage timer stops but it does not reset. The stage timer continues its operation when the block signal is disabled. When the block signal is active, the stage output signals are disabled.

The CBFP stage provides the following events:

- start on
- start off
- trip on
- trip off

Events can be activated via the **Enable events** setting view.

Condition selectors

The CBFP function has four condition selectors that can be used separately or all together to activate and reset the CBFP function.

The four condition selectors are almost identical. The only difference is that condition selectors 1 and 2 are for all protection functions that benefit from zero-current detection for resetting the CBFP as described in section *Zero-current detector*, and selectors 3 and 4 are for all the protection functions that do not benefit from zero-current detection for CBFP.

Condition selector 4 can be used to support selectors 1, 2 and 3. For example, if there are too many stages to be monitored in condition set 1, condition selector 4 can be used to monitor the output contacts. Monitoring digital inputs is also possible if the backup protection is based on external current relay, for example. The only CBFP reset criteria for condition set 4 are the monitored input and output signals.

The monitoring conditions are enabled by default. It can be enabled or disabled by setting the Enable monitoring parameter to control the monitoring status.

For monitoring condition 1~3, user can set 6 protection stages at most for each monitoring condition. Once the stages monitored trips, 50BF-1/2 starts immediately to check the CB and current status.

For monitoring condition 4, user can set 3 monitoring outputs and inputs for monitoring needs. 50BF-1/2 can also be reset by these signals.

The user can reset the 50BF-1/2 by CB status if the CB parameter is set for all conditions. 50BF-1/2 can also be reset by monitored stage for condition 1~3. Zero current criteria can be used to reset condition 1 while zero EF current criteria can be used to reset condition 2.

Figure 90 - Start signal and reset condition setting view for Condition 1

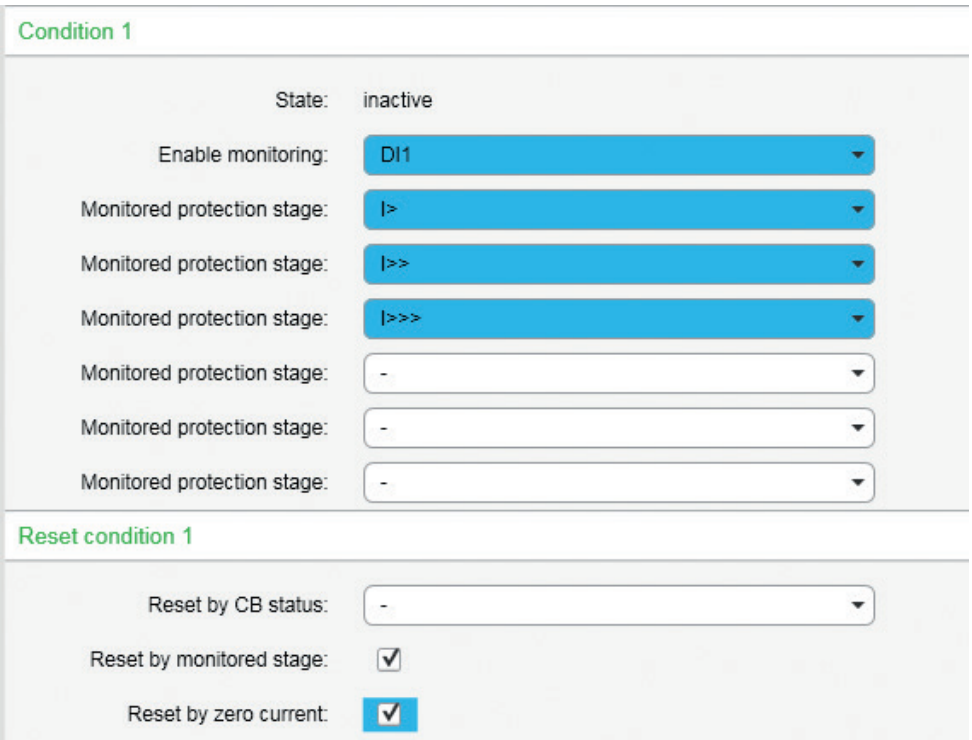

Separate zero-current detection with dedicated start settings exists for phase overcurrent and earth fault overcurrent signals. Zero-current detection is independent of the protection stages.

The condition criteria, available signals and reset conditions are listed in *Table 72*.

> **NOTE:** The start signal can be selected for each condition in advance from the pull-down menu even if the concerned stage is not enabled. For the CBFP activation, the concerned stage must be enabled from the protection stage menu and the stage has to start to activate the CBFP start signal.

Table 72 - CBFP condition selectors

Criteria	Start signal	Reset condition
Condition 1	I>, I>>, I>>>, Iv>, I2>, dI>, dI>>, Iφ>, Iφ>>, Iφ>>>, Iφ>>>>, T>, If2>, X<, X<<, I'>, I'>>, If5, SOTF	**Reset by CB status:** DI1 – DIx (1, F1, F2, VI1-20, VO1–20, GOOSE_NI1–64, POC1–16, Obj1-8Op **Monitored stage:** On/Off **Zero-current detection:** On/Off
Condition 2	Io>, Io>>, Io>>>, Io>>>>, Io>>>>>, Ioφ>, Ioφ>>, Ioφ>>>, dIo>, dIo>>	
Condition 3	Uof3<, U>, U>>, U>>>, U<, U<<, U<<<, U1<, U1<<, Uo>, Uo>>, P<, P<<, Q<, Z<, Z<<, Pgr1-8, f<, f<<, fx, fxx, df/dt, Uf>, Pslip	**Reset by CB status:** DI1 – DIx (1, F1, F2, VI1-20, VO1–20, GOOSE_NI1–64, POC1–16, Obj1-8Op **Monitored stage:** On/Off
Condition 4	Outputs: A1, T1-Tx (1 Inputs: DI1 – DIx (1, F1, F2, VI1-20, VO1 – 20, GOOSE_NI1 – 64, POC1 – 16	

In addition to the selection of the start signal, the CBFP reset condition needs to be selected.

If no reset conditions are selected, the stage uses **Reset by monitored stage** as the reset condition. This prevents a situation where the stage never releases.

The reset condition **Reset by CB status** is useful if the current is already zero when the CB is opened (for example unloaded CB).

When more than one selection criteria are selected, AND condition is used, for example “zero current detection” AND “object open”. See *Figure 89* for details.

Stage timer

The operate delay timer is started by a signal activated by the monitored stages (condition selectors). The operate time delay is a settable parameter. When the given time delay has elapsed, the stage provides a trip signal through the output matrix and the event codes.

The timer delay can be set between 0.04 s and 10.00 s.

Zero-current detector

The zero-current detector is an undercurrent condition to reset the CBFP function when all phase currents are below the start (pick-up) setting value. This separate undercurrent condition is needed to properly detect successful CB operation. For example, in a CB failure condition where one or more CB poles are partly conducting when the CB is open, the fault current can be small enough to reset the primary protection stage (for example overcurrent stage), in which case the CBFP does not operate. When a separate undercurrent limit is used, CBFP reset can be performed only when the fault current really is zero or near zero instead of relying on the protection stage reset.

Figure 91 - Zero-current detector setting view

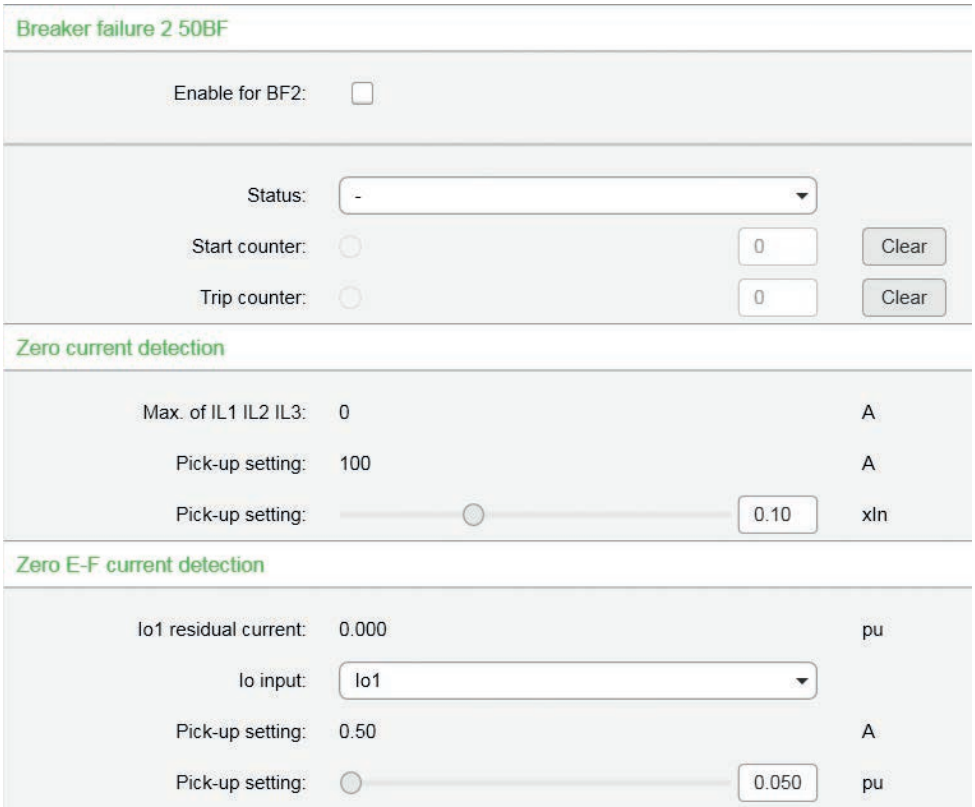

The setting range of the zero-current detector is always associated with the CT nominal value, even in case of motor and transformer protection. The setting range minimum depends on the relay accuracy. Instead of zero, a small minimum value can be accepted. See *Table 73*.

CBFP coordination

The CBFP delay setting has to be coordinated according to the CB operation time and the reset time of protection stages monitored by the CBFP function as described in *Figure 92*.

Figure 92 - CBFP coordination

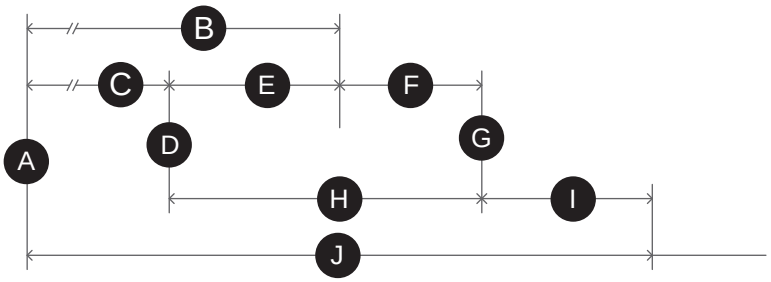

A. Fault occurrence
B. Normal fault clearing time
C. Protection delay
D. CBFP stage start
E. CB operate time
F. Protection stage reset time + safety margin
G. CBFP trip
H. CBFP stage operate delay (CB operate time + protection stage reset time + safety margin)
I. CB operate time
J. Total fault clearing time in case of failed CB operation but successful CBFP operation

Characteristics

Table 73 - Breaker failure (ANSI 50BF)

Zero-current detection:	
- Phase overcurrent	0.05–0.2 x In
- Earth fault overcurrent	0.005–8.000 pu (when I_{01} or I_{02} measured with standard EF CT) (step 0.001) 0.050–8.000 pu (when I_{01} or I_{02} measured with CSH) (step 0.001) 0.005–20.000 pu (when $I_{0\ Calc}$) (step 0.001)
Definite time function:	
- Operate time	0.04–10 s
Inaccuracy:	
- Operate time	±20 ms

5.19 Switch-on-to-fault (ANSI 50HS)

ANSI 50HS	Feeder	Motor
P3U20	x	x
P3U30	x	x

Description

The switch-on-to-fault (SOTF) protection function offers fast protection when the circuit breaker (CB) is closed manually against a faulty line. Overcurrent-based protection does not clear the fault until the intended time delay has elapsed. SOTF gives a trip signal without additional time delay if the CB is closed and a fault is detected after closing the CB.

Figure 93 - Switch-on-to-fault function operates when the CB has detected open and the fault current reaches start setting value

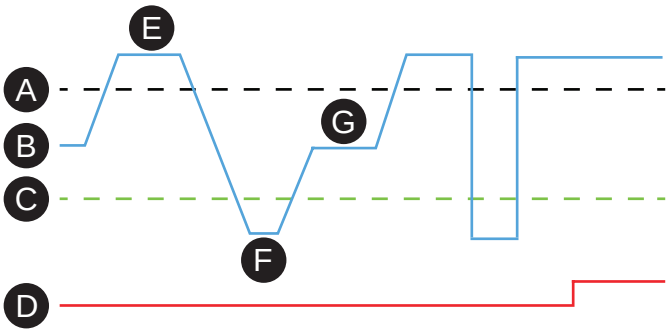

A. Start setting

B. Maximum of I_{L1}, I_{L2}, I_{L3}

C. Low limit 0.02 x I_N

D. SOTF trip

E. Switch-on-to-fault does not activate if the CB has not been in open position before the fault. Open CB detection is noticed from the highest phase current value which has to be under a fixed low-limit threshold (0.02 x I_N). Opening of the CB can be detected also with digital inputs (Dead line detection input = DI1 – DIx, VI1 – VIx). The default detection input is based on the current threshold, so the dead line detection input parameter has value "–".

F. Dead line detection delay defines how long the CB has to be open so that the SOTF function is active. If the set time delay is not fulfilled and the highest phase current value (maximum of I_{L1}, I_{L2}, I_{L3}) rises over the start setting, the SOTF does not operate.

G.If the highest phase current value of I_{L1}, I_{L2}, I_{L3} goes successfully under the low limit and rises to a value between the low limit and the start value, then if the highest phase current value rises over the start setting value before the set SOTF active after CB closure time delay has elapsed, the SOTF trips. If this time delay is exceeded, the SOTF does not trip even if the start setting value is exceeded.

Setting groups

This stage has one setting group.

Characteristics

Table 74 - Switch-on-to-fault SOTF (50HS)

Current input	IL or I'L
Start value	1.00–15.00 x I_N (step 0.01)
Dead line detection delay	0.00–60.00 s (step 0.01)
SOTF active after CB closure	0.10–60.00 s (step 0.01)
Operate time	< 30 ms (When I_M/I_{SET} ratio > 1.5)
Reset time	< 95 ms
Reset ratio	0.97
Inaccuracy	±3% of the set value or 5 mA secondary

5.20 Phase overcurrent (ANSI 50/51)

ANSI 50/51	Feeder	Motor
P3U20	x	x
P3U30	x	x

Description

Phase overcurrent protection is used against short-circuit faults and heavy overloads.

The overcurrent function measures the fundamental frequency component of the phase currents. The protection is sensitive to the highest of the three phase currents. Whenever this value exceeds the user's start setting of a particular stage, this stage starts and a start signal is issued. If the fault situation remains on longer than the operation delay setting, a trip signal is issued.

For the fastest operation delay (30 ms), the sample based operating quantity is used for stage start instead of fundamental frequency component. Sample based value allows faster stage start, resulting faster trip time. The sample based operating quantity is more sensitive for the transient DC component that the fundamental frequency component.

Block diagram

Figure 94 - Block diagram of the three-phase overcurrent stage I>

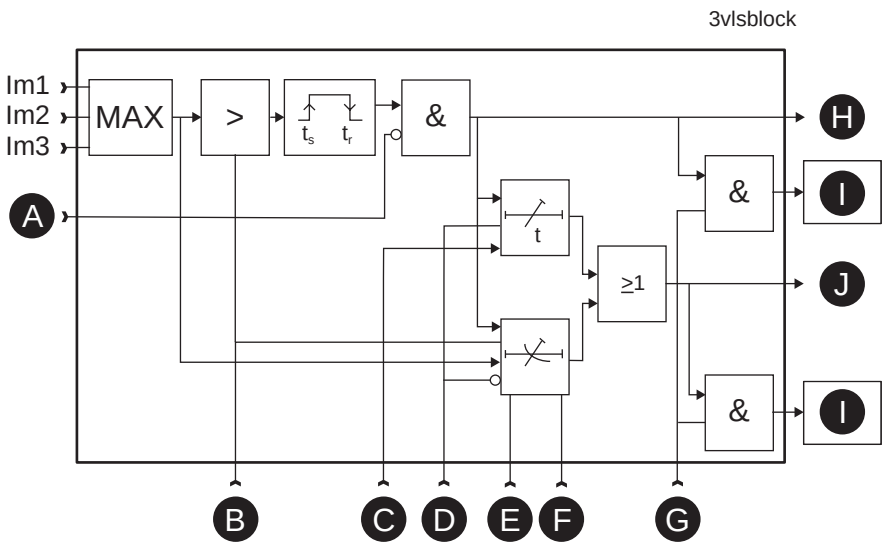

A. Block
B. Setting I>s
C. Delay
D. Definite / dependent time
E. Dependent time characteristics
F. Multiplier
G. Enable events
H. Start
I. Register event
J. Trip

Figure 95 - Block diagram of the three-phase overcurrent stage I>> and I>>>

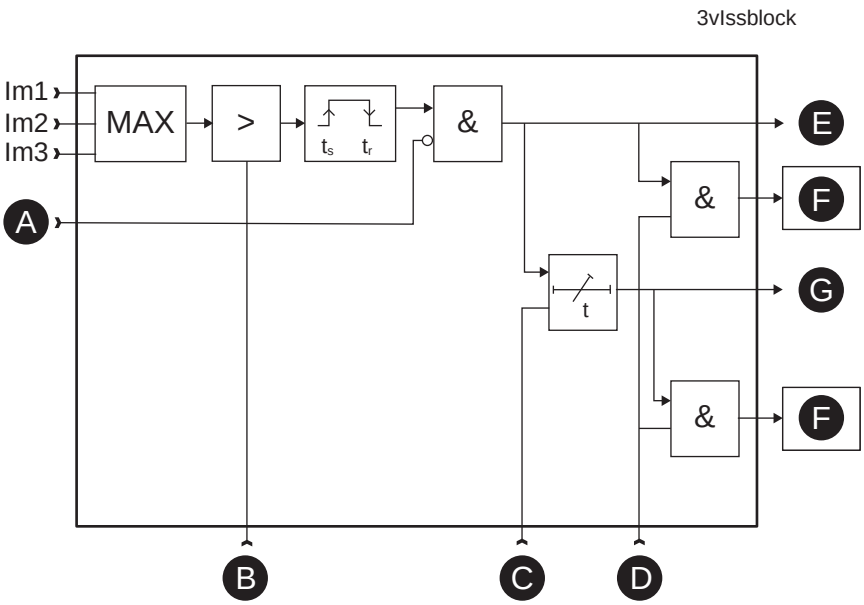

A. Block
B. Setting I>>s
C. Delay
D. Enable events
E. Start
F. Register event
G. Trip

Three independent stages

There are three separately adjustable overcurrent stages: I>, I>> and I>>>. The first stage I> can be configured for definite time (DT) or dependent operate time (IDMT) characteristic. The stages I>> and I>>> have definite time operation characteristic. By using the definite delay type and setting the delay to its minimum, an instantaneous (ANSI 50) operation is obtained.

Figure 94 shows a functional block diagram of the I> overcurrent stage with definite time and dependent time operate time. *Figure 95* shows a functional block diagram of the I>> and I>>> overcurrent stages with definite time operation delay.

Dependent operate time

Dependent operate time means that the operate time depends on the amount the measured current exceeds the start setting. The bigger the fault current is, the faster is the operation. The dependent time delay types are described in *5.6 Dependent operate time*. The relay shows the currently used dependent operate time curve graph on the local panel display.

Dependent time limitation

The maximum measured secondary current is 50 x I_N. This limits the scope of *dependent curves* with high start settings. See *5.6 Dependent operate time* for more information.

Include harmonics setting

The I> and I>> (50/51) overcurrent protection stages have a setting parameter to include harmonics. When this setting is activated, the overcurrent stage calculates the sum of the base frequency and all measured harmonics. This

feature is used to determine the signal's true root mean square value to detect the signal's real heating factor. The operate time is 5 ms more when harmonics are included in the measurement. Activate the "Include harmonics" setting if the overcurrent protection is used for thermal protection and the content of the harmonics is known to exist in the power system.

Cold load and inrush current handling

See *6.3 Cold load start and magnetizing inrush*.

Setting groups

There are four setting groups available for each stage.

Characteristics

Table 75 - Phase overcurrent stage I> (50/51)

Start value	0.05–5.00 x I_N or x I_{MOT} (step 0.01)
Definite time function: - Operate time	DT[50)] 0.04–300.00 s (step 0.01 s)
IDMT function: - Delay curve family - Curve type - Inv. time coefficient k - RI curve	 (DT), IEC, IEEE, RI Prg EI, VI, NI, LTI, MI…, depends on the family[51)] 0.025–20.0 0.025–20.0
Start time	40 ms at 2 * Is pick-up value
Reset time	< 95 ms
Overshoot time	< 50 ms
Reset ratio	0.97
Transient overreach, any τ	< 10%
Inaccuracy: - Starting - Operate time at definite time function - Operate time at IDMT function	 ±3% of the set value or 0.005 In[52)] ±1% or ±25 ms ±5% or at least ±25ms

[50)] This is the instantaneous time, that is, the minimum total operate time including the fault detection time and the operate time of the trip contacts. Use the **Accept zero delay** setting in the protection stage setting view in eSetup Easergy Pro to accept the zero operate time setting for the DT function.
[51)] EI = Extremely Inverse, NI = Normal Inverse, VI = Very Inverse, LTI = Long Time Inverse, MI= Moderately Inverse
[52)] In equals to rated primary current of the current transformer or rated primary current of LPCT sensor.

Table 76 - Phase overcurrent stage I>> (50/51)

Start value	0.10 – 20.00 x I_N or x I_{MOT} (step 0.01)
Definite time function: - Operate time	DT[53)] 0.04 – 1800.00 s (step 0.01 s)
Start time	35 ms at 2 * Is pick-up value
Reset time	< 95 ms
Overshoot time	< 50 ms
Reset ratio	0.97
Transient overreach, any τ	< 10%
Inaccuracy: - Starting - operate time	±3% of the set value or 0.005 In[54)] ±1% or ±25 ms

[53)] This is the instantaneous time, that is, the minimum total operate time including the fault detection time and the operate time of the trip contacts. Use the **Accept zero delay** setting in the protection stage setting view in eSetup Easergy Pro to accept the zero operate time setting for the DT function.
[54)] In equals to rated primary current of the current transformer or rated primary current of LPCT sensor.

Table 77 - Phase overcurrent stage I>>> (50/51)

Start value	0.10–40.00 x I_N or x I_{MOT} (step 0.01)
Definite time function: - Operate time	DT[55)] 0.03–300.00 s (step 0.01 s)
Instant operate time: I_M / I_{SET} ratio > 1.5 I_M / I_{SET} ratio 1.03 – 1.5	 <30 ms < 50 ms
Start time	20 ms at 2 * Is pick-up value
Reset time	< 95 ms
Overshoot time	< 50 ms
Reset ratio	0.97
Inaccuracy: - Starting - Operate time DT (I_M/I_{SET} ratio > 1.5) - Operate time DT (I_M/I_{SET} ratio 1.03 – 1.5)	 ±3% of the set value or 0.005 In[56)] ±1% or ±15 ms ±1% or ±25 ms

[55)] This is the instantaneous time, that is, the minimum total operate time including the fault detection time and the operate time of the trip contacts. Use the **Accept zero delay** setting in the protection stage setting view in eSetup Easergy Pro to accept the zero operate time setting for the DT function.
[56)] In equals to rated primary current of the current transformer or rated primary current of LPCT sensor.

5.21 Earth fault overcurrent (ANSI 50N/51N)

ANSI 50N/51N	Feeder	Motor
P3U20	x	x
P3U30	x	x

Description

The purpose of the nondirectional earth fault overcurrent protection is to detect earth faults in low-impedance earthed networks. In high-impedance earthed networks, compensated networks and isolated networks, nondirectional earth fault overcurrent can be used as backup protection.

The nondirectional earth fault overcurrent function is sensitive to the fundamental frequency component of the earth fault overcurrent $3I_0$. The attenuation of the third harmonic is more than 60 dB. Whenever this fundamental value exceeds the start setting of a particular stage, this stage starts and a start signal is issued. If the fault situation remains on longer than the operate time delay setting, a trip signal is issued.

Block diagram

Figure 96 - Block diagram of the earth fault stage overcurrent I_0>

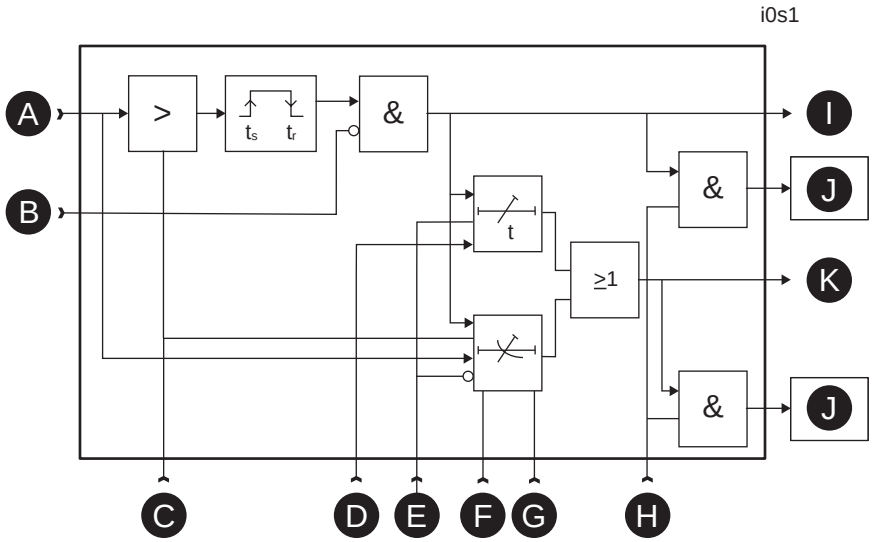

A. I_0
B. Block
C. Setting I_0>s
D. Delay
E. Definite / inverse time
F. Inverse time characteristics
G. Multiplier
H. Enable events
I. Start
J. Register event
K. Trip

Figure 97 - Block diagram of the earth fault stages overcurrent I_0>>, I_0>>>, I_0>>>>, I_0>>>>>

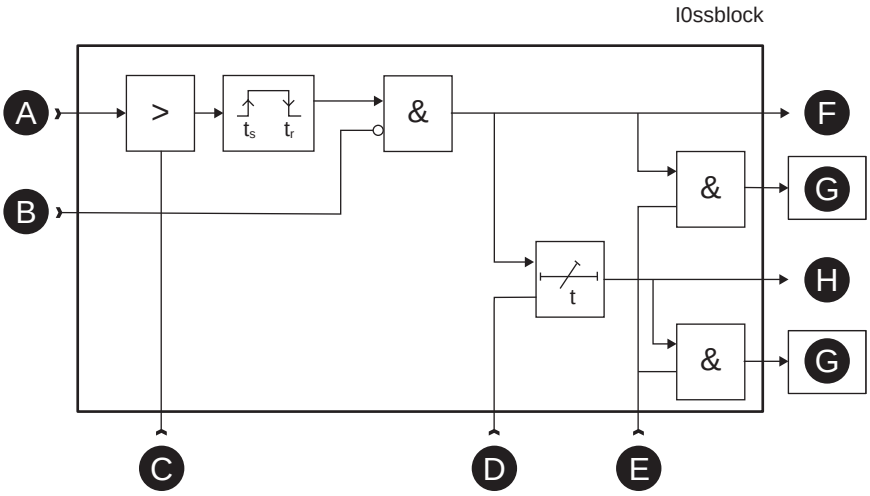

A. I_0
B. Block
C. Setting I_0>>s
D. Delay
E. Enable events
F. Start
G. Register event
H. Trip

Input signal selection

Each stage can be connected to supervise any of the following inputs and signals:

- Input I_0 for all networks other than solidly earthed.
- Calculated signal $I_{0\ Calc}$ for solidly and low-impedance earthed networks.. $I_{0\ Calc} = I_{L1} + I_{L2} + I_{L3}$.

Intermittent earth fault detection

Short earth faults make the protection to start but do not cause a trip. A short fault means one cycle or more.

Intermittent earth faults are commonly caused by a lightning or temporary contact with foreign objects. A typical reason for an intermittent earth fault is a branch of a tree occasionally touching the overhead line's phase wire.

Intermittent transient earth fault detection

Intermittent transient earth faults happen in compensated networks when the insulation fails and creates a very short, typically < 1ms, arcing fault from the phase wire to ground where the energy of the network capacitances leads through the arc flash fault to the ground. There is a dedicated stage IoINT> (ANSI 67NI) to detect and selectively clear such faults.

When starting happens often enough, transient intermittent faults can be cleared using the intermittent time setting.

When a new start happens within the set intermittent time, the operation delay counter is not cleared between adjacent faults, and finally the stage trips.

Five or eight independent nondirectional earth fault overcurrent stages

There are five separately adjustable earth fault overcurrent stages: I_0>, I_0>>, I_0>>>, I_0>>>> and I_0>>>>>. The first stage I_0> can be configured for definite time (DT) or dependent time operation characteristic (IDMT). The other stages have definite time operation characteristic. By using the definite delay type and setting the delay to its minimum, an instantaneous (ANSI 50N) operation is obtained.

Using the directional earth fault overcurrent stages (*5.32 Directional earth fault overcurrent (ANSI 67N)*) in nondirectional mode, three more stages with dependent operate time delay are available for nondirectional earth fault overcurrent protection.

Dependent operate time (I_0> stage only)

Dependent delay means that the operate time depends on the amount the measured current exceeds the start setting. The bigger the fault current is, the faster is the operation. Accomplished dependent delays are available for the I_0> stage. The relay shows a scaleable graph of the configured delay on the local panel display.

Dependent time limitation

The maximum measured secondary earth fault overcurrent is 10 x I_{0N} and the maximum measured phase current is 50 x I_N. This limits the scope of dependent curves with high start settings.

Setting groups

There are four setting groups available for each stage.

Characteristics

Table 78 - Earth fault overcurrent I_0> (50N/51N)

Input signal	I_0 (input X1:7–8 or input X1:7–9) $I_{0\ Calc} = (I_{L1} + I_{L2} + I_{L3})$
Start value	0.005–8.000 pu (when I_{01} or I_{02} measured with standard EF CT) (step 0.001) 0.050–8.000 pu (when I_{01} or I_{02} measured with CSH) (step 0.001) 0.005–20.000 pu (when $I_{0\ Calc}$) (step 0.001)
Definite time function: - Operate time	DT[57)] 0.04[57)] –300.00 s (step 0.01 s)

IDMT function: - Delay curve family - Curve type - Inv. time coefficient k	 (DT), IEC, IEEE, RI Prg EI, VI, NI, LTI, MI..., depends on the family[58)] 0.025–20.0, except 0.50–20.0 for RXIDG, IEEE and IEEE2
Start time	45 ms at 2 * Is pick-up value
Reset time	< 95 ms
Reset ratio	0.95
Inaccuracy: - Starting - Starting (Peak mode) - Operate time at definite time function - Operate time at IDMT function	 ±2% of the set value or 0.003 In[59)] ±5% of the set value or ±2% of the rated value (Sine wave <65 Hz) ±1% or ±25 ms ±5% or at least ±25 ms [57)]

[57)] This is the instantaneous time, that is, the minimum total operate time including the fault detection time and the operate time of the trip contacts. Use the **Accept zero delay** setting in the protection stage setting view in eSetup Easergy Pro to accept the zero operate time setting for the DT function.
[58)] EI = Extremely Inverse, NI = Normal Inverse, VI = Very Inverse, LTI = Long Time Inverse, MI= Moderately Inverse
[59)] In equals to rated primary current of the current transformer or rated primary current of LPCT sensor.

Table 79 - Earth fault overcurrent I_0>>, I_0>>>, I_0>>>> (50N/51N)

Input signal	I_0 (input X1:7–8 or input X1:7–9) $I_{0\ Calc} = (I_{L1} + I_{L2} + I_{L3})$
Start value	0.01-8.00 pu (when I_{01} or I_{02} measured with standard EF CT) (step 0.01) 0.05-8.00 pu (when I_{01} or I_{02} measured with CSH) (step 0.01) 0.01-20.00 pu (when $I_{0\ Calc}$) (step 0.01)
Definite time function: - Operate time	 0.04 [60)] – 300.00 s (step 0.01 s)
Start time	Typically 45 ms
Reset time	<95 ms

Reset ratio	0.95
Inaccuracy: - Starting - Starting (Peak mode) - Operate time	 ±2% of the set value or 0.003 In[61)] ±5% of the set value or ±2% of the rated value (Sine wave <65 Hz) ±1% or ±25 ms

[60)] This is the instantaneous time, that is, the minimum total operate time including the fault detection time and the operate time of the trip contacts. Use the **Accept zero delay** setting in the protection stage setting view in eSetup Easergy Pro to accept the zero operate time setting for the DT function.
[61)] In equals to rated primary current of the current transformer or rated primary current of LPCT sensor.

Table 80 - Earth fault overcurrent I_0>>>>> (50N/51N)

Input signal	I_0 (input X1:7 – 8 or input X1:7 – 9)
Start value	0.01–8.00 pu (step 0.01)
Definite time function: - Operate time	 0.03[62)]– 300.00 s (step 0.01 s)
Start time	Typically 30 ms
Reset time	< 95 ms
Reset ratio	0.95
Inaccuracy: - Starting - Starting (Peak mode) - Operate time DT (I_M/I_{SET} ratio > 1.5) - Operate time DT (I_M/I_{SET} ratio 1.03 – 1.5)	 ±2% of the set value or 0.003 In[63)] ±5% of the set value or ±2% of the rated value (Sine wave <65 Hz) ±1% or ±15 ms ±1% or ±25 ms

[62)] This is the instantaneous time, that is, the minimum total operate time including the fault detection time and the operate time of the trip contacts. Use the **Accept zero delay** setting in the protection stage setting view in eSetup Easergy Pro to accept the zero operate time setting for the DT function.
[63)] In equals to rated primary current of the current transformer or rated primary current of LPCT sensor.

5.21.1 Earth fault faulty phase detection algorithm

The earth fault overcurrent stage (ANSI 50N/51N) and directional earth fault overcurrent stage (ANSI 67N) have an inbuilt detection algorithm to detect a faulty phase. This algorithm is meant to be used in radial-operated distribution networks. The faulty phase detection can be used in solidly-earthed, impedance-earthed or resonant-earthed networks.

Operation

The faulty phase detection starts from the earth fault stage trip. At the moment of stage start, the phase currents measured prior to start are registered and stored

as prior-to-fault currents. At the moment of trip, phase currents are registered again. Finally, faulty phase detection algorithm is performed by comparing prior-to-fault currents to fault currents. The algorithm also uses positive sequence current and negative sequence current to detect faulty phase.

The detection algorithm can be enabled and disabled by selecting or unselecting a checkbox in the protection stage settings. Correct network earthing configuration must be selected in the stage settings, too. In the earth fault overcurrent stage settings, you can select between RES and CAP network earthing configuration. This selection has no effect on the protection itself, only on the faulty phase detection. In the directional earth fault overcurrent stage settings, the detection algorithm uses the same network earthing type as selected for protection. RES is used for solidly-earthed, impedance-earthed and resonant-earthed networks. CAP is only used for isolated networks.

The detected faulty phase is registered in the protection stage fault log (and also in the event list and alarm screen). Faulty phase is also indicated by a line alarm and line fault signals in the output matrix.

Possible detections of faulty phases are L1-N, L2-N, L3-N, L1-L2-N, L1-L3-N, L2-L3-N, L1-L2-L3-N, and REV. If the relay protection coordination is incorrect, REV indication is given in case of a relay sympathetic trip to a reverse fault.

5.22 Capacitor bank unbalance (ANSI 51C)

ANSI 51C	Feeder	Motor
P3U20	x	x
P3U30	x	x

NOTE: Configure the capacitor bank unbalance protection through the earth fault overcurrent stages I_0>>> and I_0>>>>.

Description

The relay enables capacitor, filter and reactor bank protection. The capacitor unbalance protection requires an IL1 current to polarize the unbalance measurement. Use the earth fault overcurrent input for the unbalance current measurement of a double-wye connected unearthed bank.

The unbalance protection is highly sensitive to internal faults of a bank because of the sophisticated natural unbalance compensation. The location method enables easy maintenance monitoring for a bank.

This protection scheme is specially used in double-wye-connected capacitor banks. The unbalance current is measured with a dedicated current transformer (like 5A/5A) between two starpoints of the bank.

As the capacitor elements are not identical and have acceptable tolerances, there is a natural unbalance current between the starpoints of the capacitor banks. This natural unbalance current can be compensated to tune the protection sensitive against real faults inside the capacitor banks.

Figure 98 - Typical capacitor bank protection application with PowerLogic P3 relays

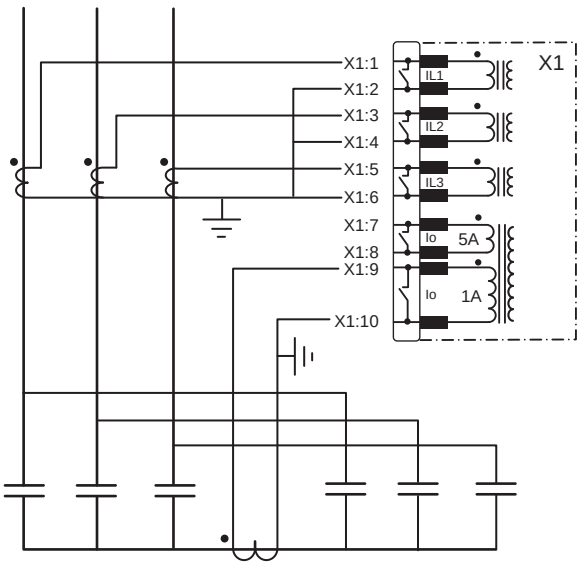

Compensation method

The method of unbalance protection is to compensate for the natural unbalance current. The compensation is triggered manually when commissioning. The

phasors of the unbalance current and one phase current are then recorded. This is because one polarizing measurement is needed. When the phasor of the unbalance current is always related to I_{L1}, the frequency changes or deviations have no effect on the protection. After the recording, the measured unbalance current corresponds to the zero-level and therefore, the setting of the stage can be very sensitive.

Compensation and location

The most sophisticated method is to use the compensation method described above with an add-on feature that locates the branch of each faulty element (the broken fuse).

This feature is implemented to the stage I_0>>>>, while the other stage I_0>>> can still function as normal unbalance protection stage with the compensation method. Normally, the I_0>>>> could be set as an alarming stage while stage I_0>>> trips the circuit breaker.

The stage I_0>>>> should be set based on the calculated unbalance current change of one faulty element. You can calculate this using the following formula:

Equation 21

$$3I_0 = \frac{\dfrac{U_{L-N}}{(2 \cdot \pi \cdot f \cdot C_1)^{-1}} - \dfrac{U_{L-N}}{(2 \cdot \pi \cdot f \cdot C_2)^{-1}}}{3}$$

C1 = Capacitor unit capacitance (µF)

C2 = Capacitor unit capacitance, after one element fails (µF)

However, the setting must be 10% smaller than the calculated value, since there are some tolerances in the primary equipment as well as in the relay measurement circuit. Then, the time setting of I_0>>>> is not used for tripping purposes. The time setting specifies, how long the relay must wait until it is certain that there is a faulty element in the bank. After this time has elapsed, the stage I_0>>>> makes a new compensation automatically, and the measured unbalance current for this stage is now zero. Note, the automatic compensation does not affect the measured unbalance current of stage I_0>>>.

Figure 99 - Natural unbalance compensation and a single capacitor fault

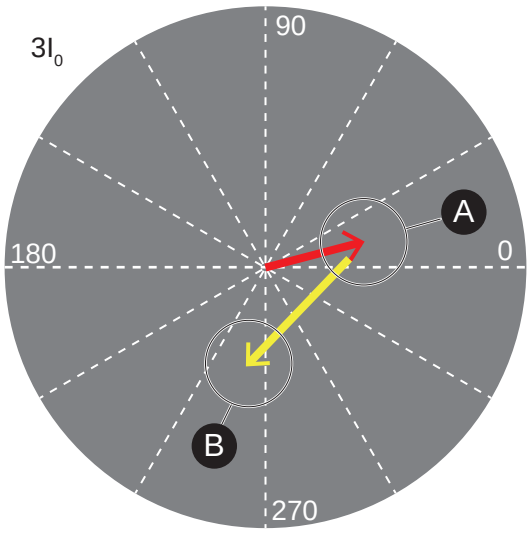

A. The natural unbalance is compensated for.

B. When the I_0 current increases above the set start value (normally 90% of a single capacitor unit) according to the angle ratio between I_0 and I_{L1}, it is decided in which branch and phase the fault occurred. The fault is memorised and compensation is completed automatically. After the set amount of faults, the stage trips.

If there is an element failure in the bank, the algorithm checks the phase angle of the unbalance current related to the phase angle of the phase current I_{L1}. Based on this angle, the algorithm can increase the corresponding faulty elements counter (there are six counters).

Figure 100 - How a failure in different branches of the bank affects the I_0 measurement

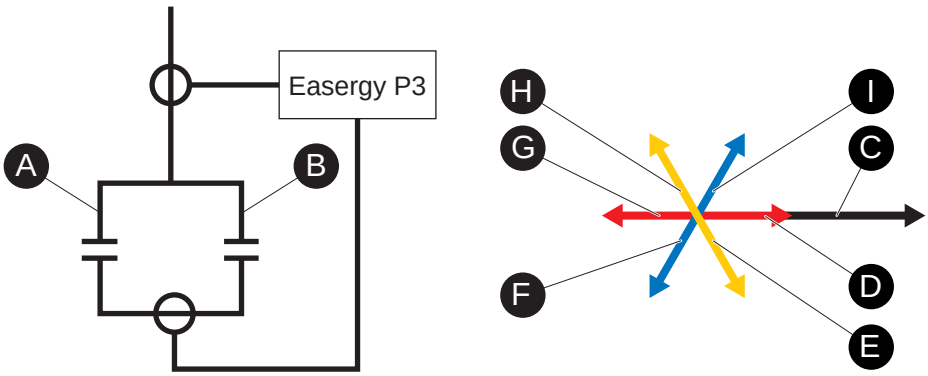

A. Branch 1
B. Branch 2
C. I_{L1} as reference
D. Phase 1 fault in branch 1
E. Phase 3 fault in branch 2
F. Phase 2 fault in branch 1
G. Phase 1 fault in branch 2
H. Phase 3 fault in branch 1
I. Phase 2 fault in branch 2

You can set for the stage I_0>>>> the allowed number of faulty elements. For example, if set to three elements, the fourth fault element will issue the trip signal.

The fault location is used with internal fused capacitor and filter banks. There is no need to use it with fuseless or external fused capacitor and filter banks, nor with the reactor banks.

Application example

An application example is presented below. Each capacitor unit has 12 elements in parallel and four elements in series.

Figure 101 - 131.43 µF Y-Y connected capacitor bank with internal fuses

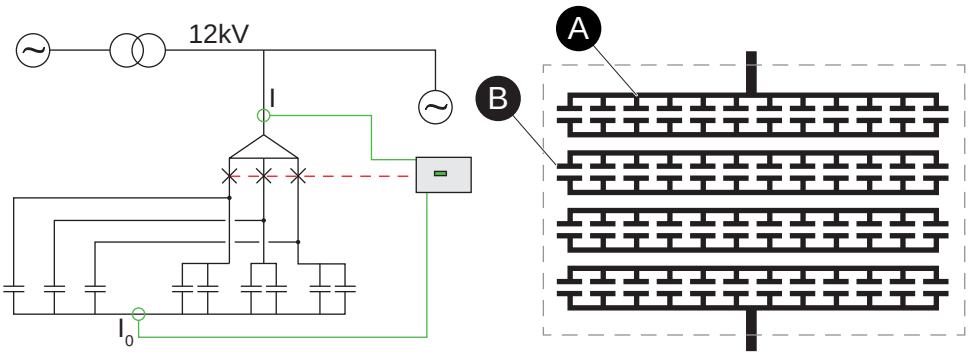

A. 12 in parallel **B.** Four in series

Characteristics

Table 81 - Capacitor bank unbalance I_0>>> and I_0>>>> (51C)

Start value	0.01-8.00 pu (when I_{01} or I_{02} measured with standard EF CT) (step 0.01) 0.05-8.00 pu (when I_{01} or I_{02} measured with CSH) (step 0.01) 0.01-20.00 pu (when $I_{0\ Calc}$) (step 0.01)
Operate time	0.04-300 s (step 0.01)
Start time	Typically 30 ms
Reset time	<95 ms
Reset ratio	0.95
Inaccuracy: - Starting - Operate time	 ±2% of the set value or ±0.3% of the rated value ±1% or ±25 ms

5.22.1 Taking unbalance protection into use

1. To enable the capacitor bank protection:
   – in eSetup Easergy Pro, in the **Protection > I_0>>>> Unbalance** setting view, select **Location** for **Compensation mode**.

Figure 102 - Enabling unbalance protection

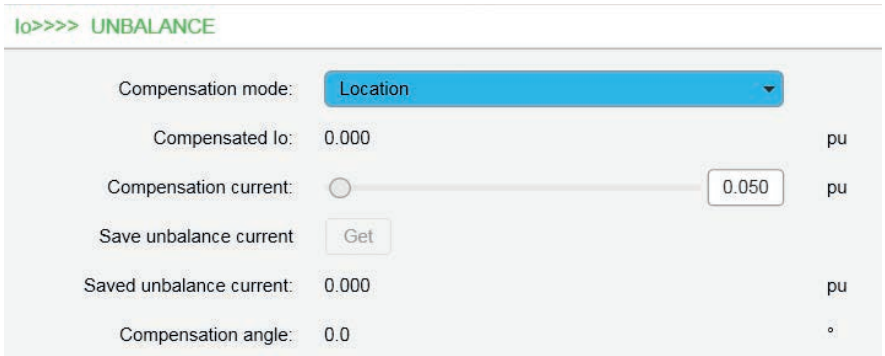

– via the PowerLogic P3 device's front panel: go to the **I_0>>>>** menu, scroll right to **1 SET 50N/51N**, and select **Location** for **CMode**.

2. To save the natural unbalance:

   – in eSetup Easergy Pro, in the **Protection > I_0>>>> Unbalance** setting view, select **Get** for **Save unbalance current**.

   Figure 103 - Saving the unbalance current

   – via the device's front panel: go to the **I_0>>>>** menu, scroll right to **SET2 50N/51N**, and select **Get** for **SaveBal**.

   NOTE: CMode has to be selected as **Location** before proceeding to this step.

3. Set the start value for both branches.

   Total capacitance of the bank is 131.43 µF. In each phase, there are three capacitor units (1+2), so the capacitance of one unit is 43.81 µF. Failure of one element inside the capacitor unit makes the total capacitance decrease to 41.92 µF (Ohm's law). This value is important when calculating the start value.

   Equation 22

$$3I_0 = \frac{\frac{U_{L-N}}{(2\cdot\pi\cdot f\cdot C_1)^{-1}} - \frac{U_{L-N}}{(2\cdot\pi\cdot f\cdot C_2)^{-1}}}{3}$$

$$3I_0 = \frac{\frac{6928}{(2\cdot\pi\cdot 50\cdot 43.81\cdot 10^{-6})^{-1}} - \frac{6928}{(2\cdot\pi\cdot 50\cdot 43.81\cdot 10^{-6})^{-1}}}{3}$$

$$3I_0 = 1.37A$$

   Failure of one element inside the bank on the left branch causes approximately 1.37 ampere unbalance current at the star point. On the right branch, there are two capacitor units in parallel, and therefore, a failure of one

element causes only 0.69 ampere unbalance. A different start value for each branch is necessary. Set the start value to 80% of the calculated value.

4. Test the operation of the unbalance protection.

Figure 104 - Testing the operation of the unbalance protection

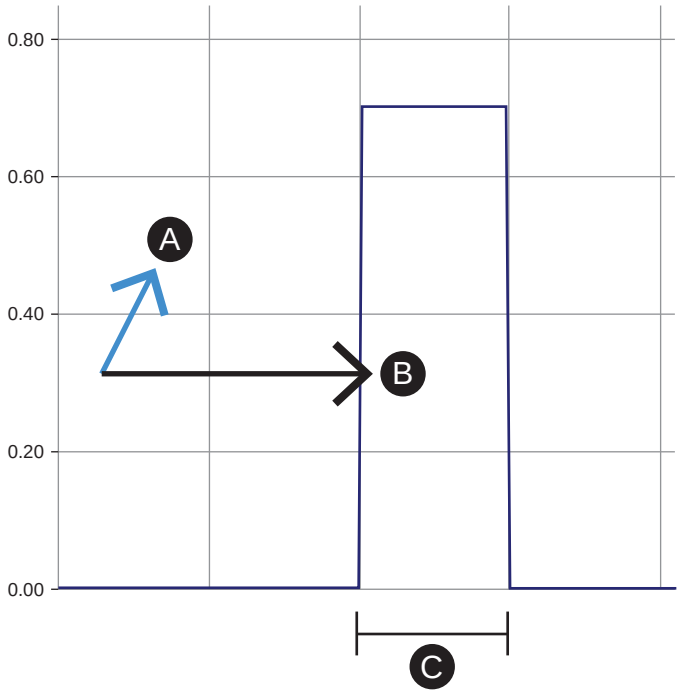

A. Phase 2 fault in branch 2
B. I_{L1} as reference
C. Set operation delay

Conduct testing by injecting current to channels I_{L1} and I_{01} of the device. In the example above, 0.69 A primary current is injected to the I_{01} channel. I_{01} is leading the phase current I_{L1} by 60 degrees. This means the fault has to be on the right branch and in phase 2. Compensation happens automatically after the set operate time until the allowed total amount of failed units is exceeded (Max. allowed faults). In this application, the fourth failed element would cause the stage to trip.

NOTE: If branch 1 faults occur in branch 2, change the polarity of the I_0 input. Clear the location counters when the commissioning of the relay has been completed.

5. Clear the location counters by clicking the **Clear** button.

Figure 105 - Clearing location counters

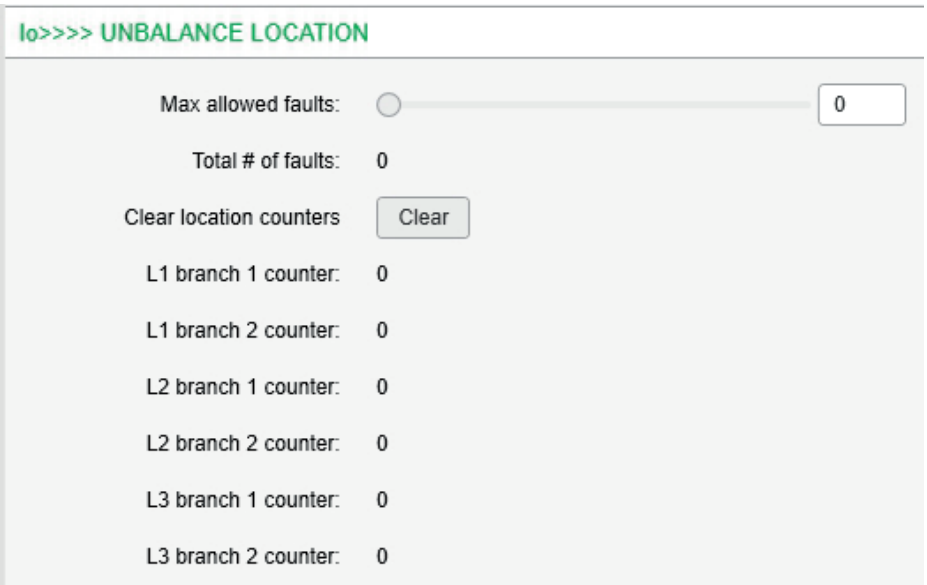

5.23 Locked rotor (ANSI 51LR)

ANSI 51LR	Feeder	Motor
P3U20		x
P3U30		x

Description

The locked rotor protection stage I_{lr}> measures the fundamental frequency component of the phase currents and calculates the average of the measured three phase currents (= phase current IL).

The locked rotor stage protects the motor when too heavy load or a mechanical failure of the motor causes rotor jam during the motor running condition.

The stage's start setting is relative to the motor's nominal starting current. The nominal starting current can be configured in the Motor start-up supervision stage (ANSI 48).

The locked rotor stage can be configured for definite time or dependent time operation characteristic. *Equation 23* defines the dependent operate time.

Equation 23

$$T = \left(\frac{I_{START}}{I_{MEAS}} \right)^2 k$$

T = Dependent operate time

I_{START} = Nominal motor starting current

I_{MEAS} = Average of measured phase currents during fault

k = Dependent time coefficient

When the calculated average phase current IL exceeds the defined start setting, the locked rotor protection stage starts operation delay calculation. The stage releases when the average phase current IL drops below the start setting. The stage operation is automatically blocked when the motor status is “starting”. For details of the criteria for motor status, see *Motor status view*.

Block diagram

Figure 106 - Block diagram of the locked rotor protection stage I_{lr}>

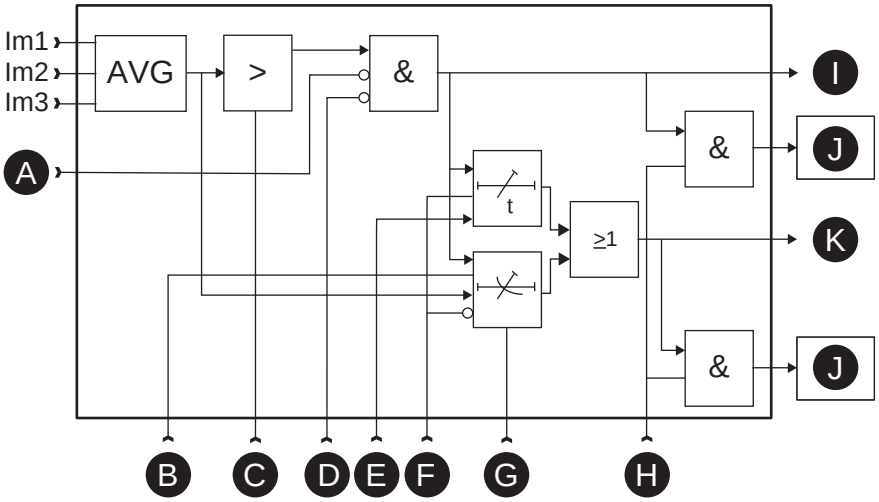

A. Block
B. Motor nominal start current
C. Start setting Ilr>
D. Motor starting
E. Delay
F. Definite / inverse time
G. Inverse delay
H. Enable events
I. Start
J. Register event
K. Trip

Setting groups

This stage has one setting group.

Characteristics

Table 82 - Locked rotor (51LR) in motor mode

Start value	10 – 100 %I_{MOTSt} (step 0.1%)
Delay type	DT, INV
Definite time characteristic (DT): - Operate time	- 1.0 – 300.0 s (step 0.1)[64)]
Dependent time characteristic (INV): - Dependent time coefficient, k	- 1.0 – 200.0 s (step 0.1)
Start time	Typically 60 ms
Reset time	<95 ms

Reset ratio	<0.95
Inaccuracy: - Starting - Operate time at definite time function - Operate time at IDMT function	- ±3% of the set value or 5 mA secondary ±1% or at ±30 ms ±5% or at least ±30 ms

64) This is the instantaneous time i.e. the minimum total operational time including the fault detection time and operation time of the trip contacts.

5.24 Voltage-dependent overcurrent (ANSI 51V)

NOTE: The voltage-dependent overcurrent stage can be configured to be either voltage-restrained or voltage-controlled.

ANSI 51V	Feeder	Motor
P3U20		
P3U30	x	x

Description

The voltage-dependent overcurrent stage I_V> is typically used for generator short-circuit protection in applications where the static excitation system of the generator is fed only from the generator terminals. Other possible applications are conditions where the fault current level depends on the sources feeding the fault.

In close-by short circuits, the fault current rapidly decreases, thus jeopardizing the operation of the high-set short circuit protection. The operation can be secured using the voltage-dependent overcurrent function.

The voltage-dependent overcurrent stage operates with definite time characteristic. The start current I_V> and the operate time t> can be set by the user.

Voltage-restained overcurrent principle

The current start limit of the voltage-restrained overcurrent function is conditional to the control voltage (fundamental frequency component positive sequence voltage U_1).

Figure 107 - Characteristics of the voltage-restrained overcurrent function I_V>

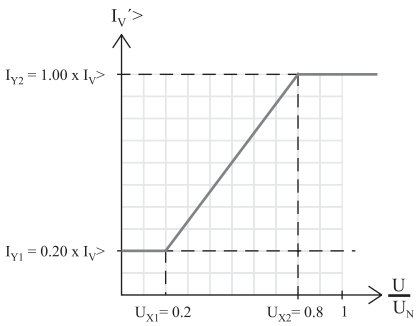

When the generator terminal or busbar voltage falls below the set voltage level, the start current level of the overcurrent stage I_V> also starts falling linearly controlled by the control voltage according to the characteristic curve.

Voltage-controlled overcurrent principle

When the setting parameters are selected according to *Figure 108*, the function is said to be voltage-controlled.

NOTE: The overcurrent function can be used as a normal high-set overcurrent stage I>>>if I_{Y1} and I_{Y2} are set to 100%.

Figure 108 - Voltage-controlled overcurrent characteristics

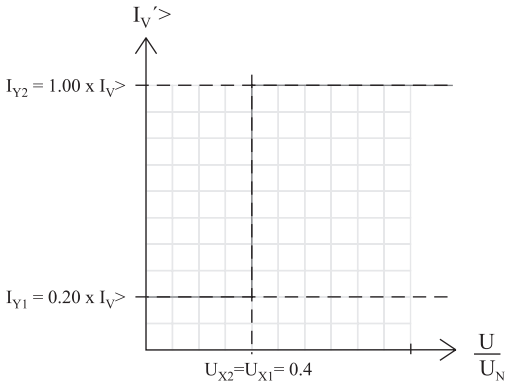

The voltage setting parameters U_{X1} and U_{X2} are proportional to the rated voltage of the generator or busbar. They define the voltage limits, within which the start current of the overcurrent unit is restrained. The multipliers I_{Y1} and I_{Y2} are used for setting the area of change of the start level of the overcurrent function in proportion to the U_{X1} and U_{X2} settings.

NOTE: U_{X2} cannot be set equal to or smaller than U_{X1} to avoid infinite slope, otherwise, U_{X2} will be set to U_{X1} value plus 3. For voltage-controlled overcurrent characteristics, you can set U_{X2} bigger than U_{X1} by 1.

Cold load and inrush current handling

See *6.3 Cold load start and magnetizing inrush*.

Setting groups

There are four setting groups available.

Characteristics

Table 83 - Voltage-dependent overcurrent I_V>(51V)

Settings: - I_V> - U_{X1}, U_{X2} - I_{Y1}, I_{Y2}	 0.50-4.00 × I_N 0–150% 0–200% I_V>
Definite time function: - Operate time	 0.08[65)]–300.00 s (step 0.02 s)
Start time	Typically 60 ms
Reset time	< 95 ms
Overshoot time	< 50 ms
Reset ratio	0.97

Transient overreach, any τ	< 10%
Inaccuracy: - Starting - Operate time at definite time function	 ±3% of set value ±1% or ±30 ms

[65)] This is the instantaneous time i.e. the minimum total operational time including the fault detection time and operate time of the trip contacts.

5.25 Overvoltage (ANSI 59)

ANSI 59	Feeder	Motor
P3U20		
P3U30	x	x

Description

Overvoltage protection is used to detect too high system voltages or to check that there is sufficient voltage to authorize a source transfer.

The overvoltage function measures the fundamental frequency component of the line-to-line voltages regardless of the voltage measurement mode (see *9.13 Voltage measurement modes*). By using line-to-line voltages any line-to-neutral over-voltages during earth faults have no effect. (The earth fault protection functions take care of earth faults.) Whenever any of these three line-to-line voltages exceeds the start setting of a particular stage, this stage starts and a start signal is issued. If the fault situation remains on longer than the operate time delay setting, a trip signal is issued.

In solidly earthed, four-wire networks with loads between phase and neutral voltages, overvoltage protection may be needed for line-to-neutral voltages, too. In such applications, the programmable stages can be used. *5.41 Programmable stages (ANSI 99)*.

Three independent stages

There are three separately adjustable stages: U>, U>> and U>>>. All the stages can be configured for the definite time (DT) operation characteristic.

Configurable release delay

The U> stage has a settable reset delay that enables detecting intermittent faults. This means that the time counter of the protection function does not reset immediately after the fault is cleared, but resets after the release delay has elapsed. If the fault appears again before the release delay time has elapsed, the delay counter continues from the previous value. This means that the function eventually trips if faults are occurring often enough.

Configurable hysteresis

The dead band is 3% by default. This means that an overvoltage fault is regarded as a fault until the voltage drops below 97% of the start setting. In a sensitive alarm application, a smaller hysteresis is needed. For example, if the start setting is about only 2% above the normal voltage level, the hysteresis must be less than 2%. Otherwise, the stage does not release after fault.

Block diagram

Figure 109 - Block diagram of the three-phase overvoltage stages U>, U>> and U>>>

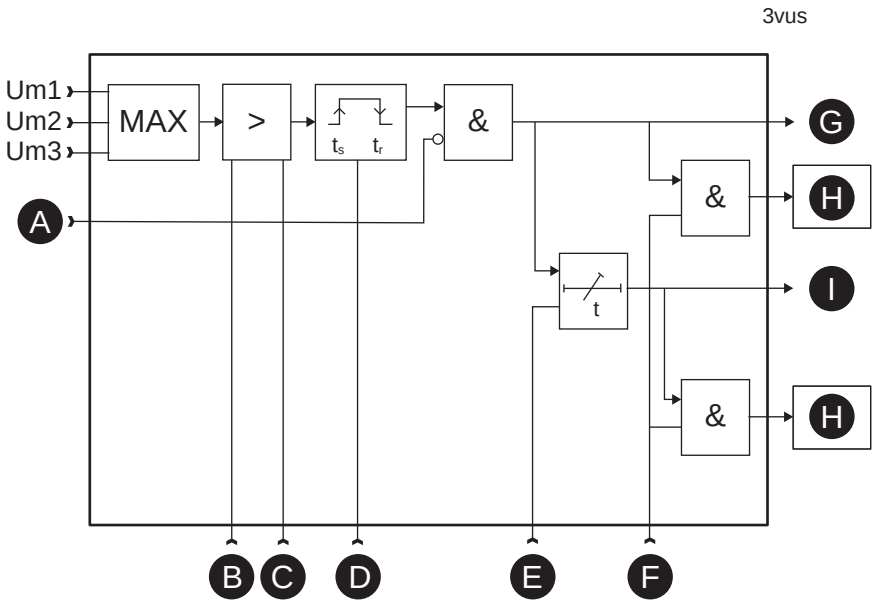

A. Blocking
B. Setting U>s
C. Hysteresis
D. Release delay
E. Delay
F. Enable events
G. Start
H. Event register
I. Trip

Setting groups

There are four setting groups available for each stage.

Characteristics

Table 84 - Overvoltage stage U> (59)

Start value	50–150% U_N (step 1%)
Definite time characteristic: - operate time	0.08[66)]– 300.00 s (step 0.02)
Hysteresis	0.99–0.800 (0.1 – 20.0%, step 0.1%)
Start time	Typically 60 ms
Release delay	0.06–300.00 s (step 0.02)
Reset time	< 95 ms

Overshoot time	< 50 ms
Inaccuracy: - Starting - operate time	 ±3% of the set value ±1% or ±30 ms

66) This is the instantaneous time, that is, the minimum total operate time including the fault detection time and the operate time of the trip contacts. Use the **Accept zero delay** setting in the protection stage setting view in eSetup Easergy Pro to accept the zero operate time setting for the DT function.

Table 85 - Overvoltage stage U>> (59)

Start value	50–150% U_N (step 1%)
Definite time characteristic: - Operate time	 0.06[67] – 300.00 s (step 0.02)
Hysteresis	0.99–0.800 (0.1–20.0%, step 0.1%)
Start time	Typically 60 ms
Reset time	< 95 ms
Overshoot time	< 50 ms
Inaccuracy: - Starting - Operate time	 ±3% of the set value ±1% or ±30 ms

67) This is the instantaneous time, that is, the minimum total operate time including the fault detection time and the operate time of the trip contacts. Use the **Accept zero delay** setting in the protection stage setting view in eSetup Easergy Pro to accept the zero operate time setting for the DT function.

Table 86 - Overvoltage stage U>>> (59)

Start value	50–160% U_N (step 1%)
Definite time characteristic: - Operate time	 0.04[68] – 300.00 s (step 0.01)
Hysteresis	0.99–0.800 (0.1–20.0%, step 0.1%)
Start time	Typically 50 ms
Reset time	< 95 ms
Overshoot time	< 50 ms
Inaccuracy: - Starting - Operate time	 ±3% of the set value ±1% or ±25 ms

68) This is the instantaneous time, that is, the minimum total operate time including the fault detection time and the operate time of the trip contacts. Use the **Accept zero delay** setting in the protection stage setting view in eSetup Easergy Pro to accept the zero operate time setting for the DT function.

5.26 Capacitor overvoltage (ANSI 59C)

ANSI 59C	Feeder	Motor
P3U20	x	
P3U30	x	

The usual design of capacitor banks allows a continuous sinusoidal voltage of 100% or rated nominal voltage at nominal frequency in line with normal operation limits of the power systems. A short-time overvoltage is permitted but the capacitor bank has to be disconnected from the power system to avoid overloading the capacitors.

Description

This protection stage calculates the voltages of a three-phase Y-connected capacitor bank using the measured currents of the capacitors. No voltage measurements are needed.

Especially in filter applications, there are harmonics and depending on the phase angles the harmonics can increase the peak voltage. This stage calculates the worst-case overvoltage in per-unit values using the *Equation 24* (IEC 60871-1). Harmonics up to 15th are taken into account.

Equation 24

$$U_C = \frac{X_C}{U_{CLN}} \sum_{n=1}^{15} \frac{I_n}{n}$$

where

Equation 25

$$X_C = \frac{1}{2\pi f C}$$

U_C = Amplitude of a pure fundamental frequency sine wave voltage, whose peak value is equal to the maximum possible peak value of the actual voltage – including harmonics – over a Y-coupled capacitor.

X_C = Reactance of the capacitor at the measured frequency

U_{CLN} =Rated voltage of the capacitance C.

n = Order number of harmonic. n = 1 for the base frequency component. n = 2 for 2nd harmonic etc.

I_N = n^{th} harmonic of the measured phase current. n = 1 – 15.

f = Average measured frequency.

c = Single phase capacitance between phase and starpoint. This is the setting value C_{SET}.

Equation 24 gives the maximum possible voltage, while the actual voltage depends on the phase angles of the involved harmonics.

The protection is sensitive to the highest voltage of the three phase-to-neutral voltages. Whenever this value exceeds the start setting of a particular stage, this stage starts and a start signal is issued. If the fault situation remains on longer than the definite operation delay setting, a trip signal is issued.

Reactive power of the capacitor bank

The rated reactive power is calculated as follows:

Equation 26

$$Q_N = 2\pi f_N U_{CLN}^2 C_{SET}$$

Q_N = Rated reactive power of the three-phase capacitor bank

f_N = Rated frequency. 50 Hz or 60 Hz. This is detected automatically or in special cases given by the user with parameter adapted frequency.

U_{CLN} = Rated voltage of a single capacitor

C_{SET} = Capacitance setting which is equal to the single phase capacitance between phase and the star point.

Three separate capacitors connected in wye (III Y)

In this configuration, the capacitor bank is built of three single-phase sections without internal interconnections between the sections. The three sections are externally connected to a wye (Y). The single-phase-to-starpoint capacitance is used as the setting value.

Equation 27

$$C_{SET} = C_{NamePlate}$$

$C_{NamePlate}$ is the capacitance of each capacitor.

Figure 110 - Capacitor bank built of three single-phase units connected in wye (III Y). Each capacitor is 100 µF and this value is also used as the setting value.

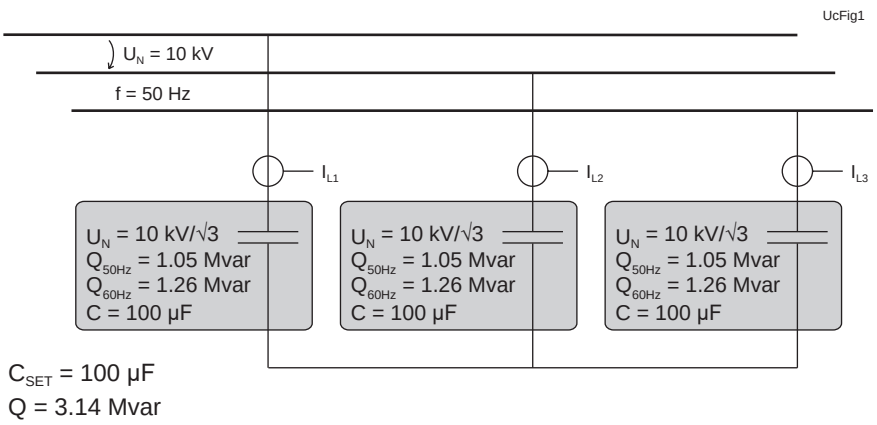

Three-phase capacitor connected internally in wye (Y)

In this configuration, the capacitor bank consists of a three-phase capacitor connected internally to a wye (Y).

The single-phase-to-starpoint capacitance is used as the setting value.

Equation 28

$$C_{SET} = 2C_{AB}$$

C_{AB} is the name plate capacitance which is equal to capacitance between phases A and B.

The reactive power is calculated using *Equation 26*.

Figure 111 - Three-phase capacitor bank connected internally in wye (Y). Capacitance between phases A and B is 50 µF and the equivalent phase-to-neutral capacitance is 100 µF whose value is also used as the setting value.

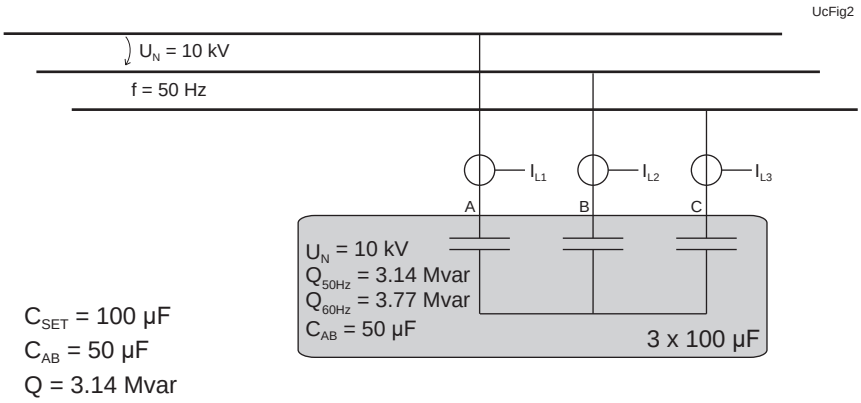

Overvoltage and reactive power calculation example

The capacitor bank is built of three separate 100 µF capacitors connected in wye (Y). The rated voltage of the capacitors is 8000 V, the measured frequency is 50.04 Hz and the rated frequency is 50 Hz.

The measured fundamental frequency current of phase L1 is:

I_{L1} = 181 A

and the measured relative 2nd harmonic is

2% = 3.62 A

and the measured relative 3rd harmonic is

7% = 12.67 A

and the measured relative 5th harmonic is

5% = 9.05 A

According to *Equation 27*, the line-to-star point capacitance is:

C_{SET} = 100 µF (*Figure 110*).

The rated power is (*Equation 26*):

Q_N = 2011 kvar

According to *Equation 25*, the reactance is:

X = 1/(2π x 50.04 x 100*10-6) = 31.806Ω

According to *Equation 24*, a pure fundamental voltage U_C having a peak value equal to the highest possible voltage with similar harmonic content as the measured reactive capacitor currents is:

U_{CL1} = 31.806*(181/1 + 3.62/2 + 12.67/3 + 9.05/5) = 6006 V

And in per-unit values:

U_{CL1} = 6006/8000 = 0.75 pu

The phases L2 and L3 are calculated similarly. The highest of the three values is compared to the start setting.

Setting groups

There are four setting groups available.

Characteristics

Table 87 - Capacitor overvoltage U_C> (59C)

Overvoltage setting range	0.10–2.50 pu (1 pu = U_{CLN})
Capacitance setting range	1.00–650.00 µF
Rated phase-to-star point capacitor voltage = 1 pu	100–260000 V
Definite time characteristic: - Operate time	 1.0–300.0 s (step 0.5)
Start time Reset time Reset ratio	Typically 1.0 s <2.0 s 0.97
Inaccuracy: - Starting - Time	 ±5% of the set value ±1% or ±1 s

5.27 Neutral voltage displacement (ANSI 59N)

ANSI 59N	Feeder	Motor
P3U20	x	x
P3U30	x	x

Description

The neutral voltage displacement protection is used as unselective backup for earth faults and also for selective earth fault protections for motors having a unit transformer between the motor and the busbar.

This function is sensitive to the fundamental frequency component of the neutral voltage displacement voltage. The attenuation of the third harmonic is more than 60 dB. This is essential because third harmonics exist between the neutral point and earth also when there is no earth fault.

Whenever the measured value exceeds the start setting of a particular stage, this stage starts and a start signal is issued. If the fault situation remains on longer than the operate time delay setting, a trip signal is issued.

Measuring the neutral displacement voltage

The neutral displacement voltage is either measured with three voltage transformers (for example broken delta connection), one voltage transformer between the motor's neutral point and earth or calculated from the measured phase-to-neutral voltages according to the selected voltage measurement mode (see *9.13 Voltage measurement modes*):

- When the voltage measurement mode is 3LN: the neutral displacement voltage is calculated from the line-to-line voltages and therefore a separate neutral displacement voltage transformer is not needed. The setting values are relative to the configured voltage transformer (VT) voltage/√3
- When the voltage measurement mode contains "+U_0": The neutral displacement voltage is measured with voltage transformer(s) for example using a broken delta connection. The setting values are relative to the VT_0 secondary voltage defined in configuration.
- Connect the U_0 signal according to the connection diagram to achieve correct polarization.

Three independent stages

There are three separately adjustable stages: U_0>, U_0>> and U_0>>>. All stages can be configured for the definite time (DT) operation characteristic.

Block diagram

Figure 112 - Block diagram of the neutral voltage displacement stages U_0>, U_0>>, U_0>>>

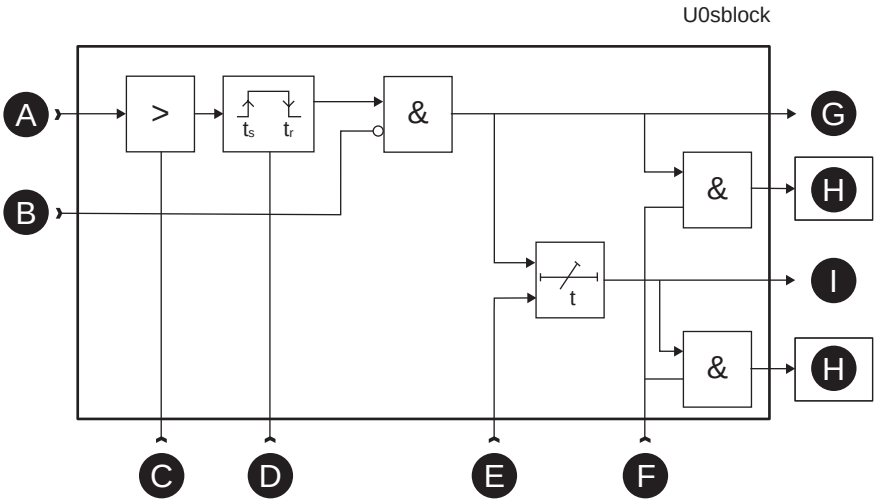

A. U_0
B. Blocking
C. Setting U_0>s
D. Release delay
E. Delay
F. Enable events
G. Start
H. Register event
I. Trip

Setting groups

There are four setting groups available for both stages.

Characteristics

Table 88 - Neutral voltage displacement stage U_0> (59N)

Start value	1–60% U_{0N} (step 1%)
Definite time function: - Operate time	 0.3–300.0 s (step 0.1 s)
Start time	Typically 200 ms
Reset time	< 450 ms
Reset ratio	0.97
Inaccuracy: - Starting - Starting U_{0Calc} (3LN mode) - Operate time	 ±2% of the set value or ±0.3% of the rated value ±1 V ±1% or ±150 ms

Table 89 - Neutral voltage displacement stage U_0>> (59N)

Start value	1–60% U_{0N} (step 1%)
Definite time function: - Operate time	 0.08–300.0 s (step 0.02 s)
Start time	Typically 60 ms
Reset time	<95 ms
Reset ratio	0.97
Inaccuracy: - Starting - Starting $U_{0\ Calc}$ (3LN mode) - Operate time	 ±2% of the set value or ±0.3% of the rated value ±1 V ±1% or ±30 ms

Table 90 - Neutral voltage displacement stage U_0 >>> (59N)

Start value	1–60% U_{0N}
Definite time function: - Operate time	 0.04–300.0 s (step 0.01 s)
Start time	Typically 50 ms
Reset time	<95 ms
Reset ratio	0.97
Inaccuracy: - Starting - Starting $U_{0\ Calc}$ (3LN mode) - Operate time	 ±2% of the set value or ±0.3% of the rated value ±1 V ±1% or ±25 ms

5.28 Restricted high-impedance earth fault (ANSI 64REF, 64BEF)

The high-impedance REF/BEF protection function is based on an external connection of a stabilizing resistor and a voltage limiting varistor connection to the I_0 input of PowerLogic P3 devices. The CT requirement, stabilizing resistor and voltage limiting varistor calculations are explained in a separate Application Note (P3APS17016EN).

5.29 High-impedance busbar protection (ANSI 87 HiZ BB)

The high-impedance HiZ BB protection function is based on an external connection of a stabilizing resistor and a voltage limiting varistor connection to the phase current inputs of PowerLogic P3 devices. The CT requirement, stabilizing resistor and voltage limiting varistor calculations are explained in a separate Application Note (P3APS20043EN).

5.30 Motor restart inhibition (ANSI 66)

ANSI 66	Feeder	Motor
P3U20		x
P3U30		x

Description

The simplest way to start an asynchronous motor is just to switch the stator windings to the supply voltages. However, every such start heats up the motor considerably because the initial currents are significantly above the rated current.

If the motor manufacturer has defined the maximum number of starts within an hour or the minimum time between two consecutive starts, this stage is easy to apply to prevent too frequent starts.

When the current has been less than 10 % of the motor nominal current and then exceeds the value Motor start detection current of I_{ST}> (Motor start-up supervision stage, ANSI 48), the situation is recognized as a motor start. After the recognition of the motor start, if the current drops to less than 10 % of the motor nominal current, the stage considers the motor to be stopped.

The motor restart inhibition stage provides an N> alarm signal when the second last start has been done and remains active until the maximum amount of motor starts have been reached or one hour of time has passed.

The N> motor start inhibit signal activates after starting the motor and remains active a period of time that is defined for parameter Min time between motor starts. After the given time has passed, the inhibit signal returns to inactive state.

When the stage's start counter reaches the value defined for Max. motor starts/hour, the N> motor start inhibit signal activates and remains active until one hour has passed.

Set the parameter **Def. elap time from motor start** to 120 min if the ANSI 66 stage is required to give permission to start the motor immediately after the relay is powered. If this setting is 0 min, the motor is not started until the **Min time between motor starts** delay has elapsed.

The motor restart inhibition stage's correlation to the output contacts is defined in the output matrix menu. See *4.4.1 Output matrix*.

Figure 113 shows an application for preventing too frequent starting using the N> stage. Closed coil wire has been connected through the normal close (NC) contact of the signal relay A1, and A1 is controlled with the N> start inhibit signal. Whenever the N> motor start inhibit signal becomes active, it prevents circuit breaker closing.

Figure 113 - Application for preventing too frequent starting using the N> stage

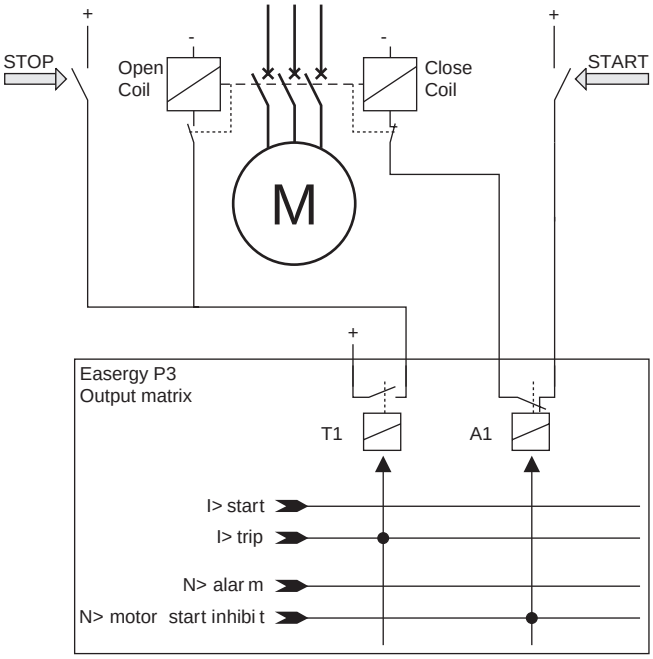

Setting groups

This stage has one setting group.

Characteristics

Table 91 - Motor restart inhibition N> (66)

Settings:	-
- Max. motor starts	1 – 20
- Min. time between motor starts [69)]	0.0–100 min. (step 0.1 min)
- Def. elap. (default elapsed) time from motor start	0 or 120 min

[69)] If *Min. time between motors starts* is set to zero, this function is disabled, that is, the minimum time between successive motor starts is not considered.

5.31 Directional phase overcurrent (ANSI 67)

ANSI 67	Feeder	Motor
P3U20		
P3U30	x	x

Description

The directional phase overcurrent protection can be used for directional short-circuit protection. Typical applications are:

- Short-circuit protection of two parallel cables or overhead lines in a radial network.
- Short-circuit protection of a looped network with single feeding point.
- Short-circuit protection of a two-way feeder, which usually supplies loads but is used in special cases as an incoming feeder.
- Directional earth-fault overcurrent protection in low-impedance earthed networks. In this case, the relay is recommended to connect for line-to-neutral (3LN) voltage measurement instead of line-to-line (2LL+U_0) voltage measurement. In low-impedance earthed network, residual voltage U_0 may be too low for reliable measurement. See *9.13 Voltage measurement modes*.

  NOTE: For networks where the maximum possible earth-fault current is lower than the overcurrent setting value, use the directional earth-fault (67N) stages.

The directional phase overcurrent function measures the fundamental frequency component of the phase current. The protection is sensitive to the highest three-phase current. Whenever this value exceeds the configured start setting and, if the polarization quantity is within the configured sector setting of a particular stage, a start signal is issued. If the fault remains on longer than the time defined by the operation delay setting, a trip signal is issued.

For line-to-line and three-phase faults, the fault direction is determined with positive-sequence polarization using the angles between the positive sequences of currents and voltages.

For line-to-neutral faults, the fault direction is determined with cross-polarization using fault-phase current and a healthy line-to-line voltage.

For details on power direction, see *3.9 Power and current direction*.

Voltage memory

An adjustable 0.2...3.2 s cyclic buffer that stores the line-to-line or phase-to-earth voltages is used as the voltage memory. The stored phase angle information is used as direction reference if all the line-to-line voltages drop below 1% during a fault. The voltage memory can be adjusted by setting the **Angle memory duration** parameter in the **Scalings** setting view in eSetup Easergy Pro.

Block diagrams

Figure 114 - Block diagram of directional phase overcurrent stage Iϕ > and Iϕ >>

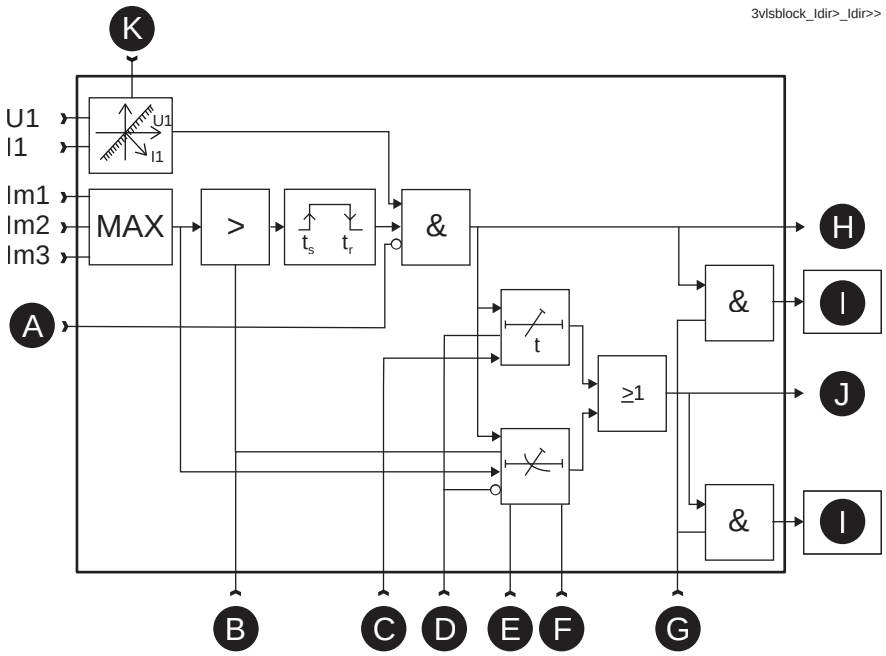

A. Block
B. Setting I>s
C. Delay
D. Definite / dependent time
E. Dependent time characteristics
F. Multiplier
G. Enable events
H. Start
I. Register event
J. Trip
K. Directional discrimination by U1/I1 angle

Figure 115 - Block diagram of directional phase overcurrent stage Iϕ >>> and Iϕ >>>>

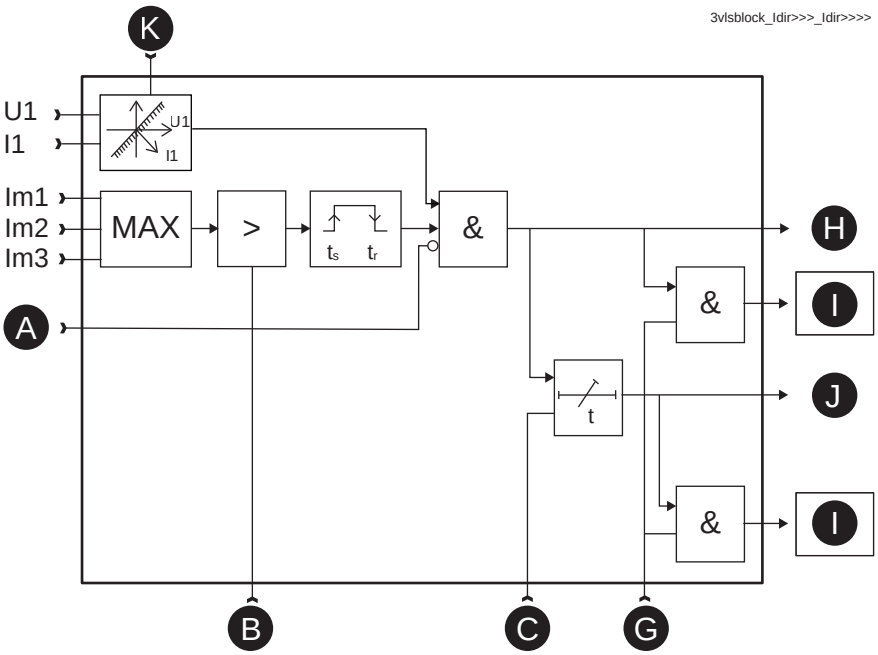

A. Block
B. Setting I>>>s
C. Delay
G. Enable events
H. Start
I. Register event
J. Trip
K. Directional discrimination by U1/I1 angle

Operation

The directional phase overcurrent uses positive-sequence polarization methods for faults that do not involve earth, that is, line-to-line faults and three-phase faults. For faults that involve earth, the cross-polarization method is used.

The function has two conditions as shown in the block diagram. One is the current threshold and the other is the fault direction or fault angle. If both conditions are true, the stage starts and trips after the set trip delay. Whenever the highest three-phase current exceeds the set value, there is an overcurrent condition.

The directional condition of the fault is different depending on whether earth is involved in the fault or not.

For faults that do not involve earth, the fault direction or fault angle is determined as an angle between the positive sequences of current and voltage. The angle reference for the positive-sequence current is the positive-sequence voltage that is rotated by the base-angle setting (also called relay characteristics angle). The actual trip area is ± 88° from the base-angle setting. If the positive-sequence current vector falls into the trip area, there is a directional condition.

The magnitude of the positive-sequence current has no impact on the overcurrent condition or the directional condition.

If the current threshold and directional conditions are true, the stage starts and trips after the set trip delay.

For faults that involve earth, the fault direction or fault angle is determined as an angle between the healthy line-to-line voltage and the faulted phase current. The angle reference for the faulted phase current is opposite to the healthy line-to-line voltage that is rotated by the base-angle setting plus 90° to the positive direction. The actual trip area is ± 88° from the base angle setting plus 90°. If the fault current vector falls into the trip area, there is a directional condition. If both conditions are true, the stage starts and trips after the set trip delay. If the current threshold and directional conditions are true, the stage starts and trips after the set trip delay.

A typical characteristic for the directional phase overcurrent protection for line-to-line faults is shown in *Figure 116*. The base angle setting is -30°. The stage starts if the maximum of the three-phase currents exceeds the current threshold and if the tip of the positive-sequence current phasor gets into the grey area.

Figure 116 - Example of the directional phase overcurrent protection area for line-to-line fault

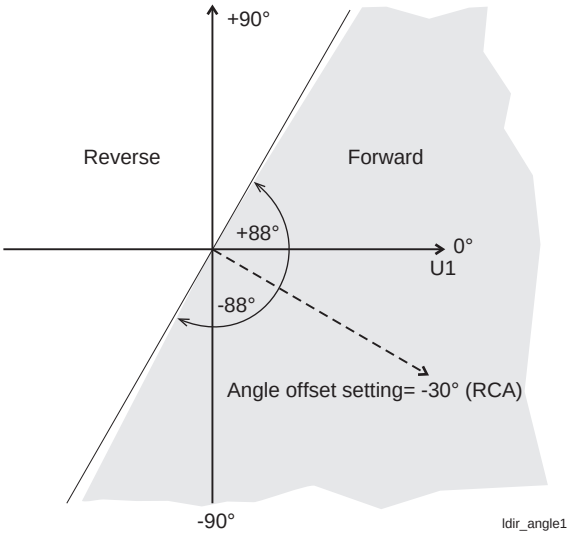

A typical characteristic for the directional phase overcurrent protection for line-to-earth faults is shown in *Figure 117*. The base angle setting is -30°. The stage starts if the maximum of the three-phase currents exceeds the current threshold and if the tip of the fault current phasor gets into the grey area.

Figure 117 - Example of the directional phase overcurrent protection area for line-to-earth fault , RCA internally rotated +90º CCW during earth fault

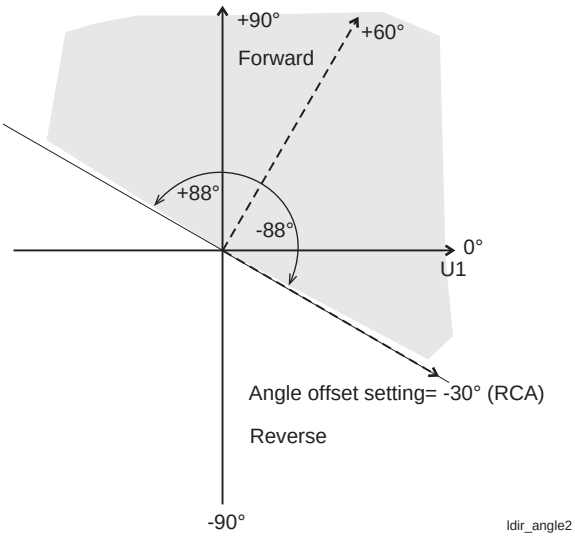

Three modes are available:

- directional
- non-directional
- directional + backup

In the non-directional mode, the stage acts like an ordinary overcurrent 50/51 stage.

The directional + backup mode works like the directional mode, but it has non-directional backup protection that is used if a close-up fault forces all voltages to about zero. After the angle memory hold time, the direction would be lost.

The directional + backup mode is required when the operate time is set longer than the voltage memory setting or no other non-directional backup protection is used.

In *Figure 118*, the grey area is the trip area.

Figure 118 - Difference between directional and non-directional mode

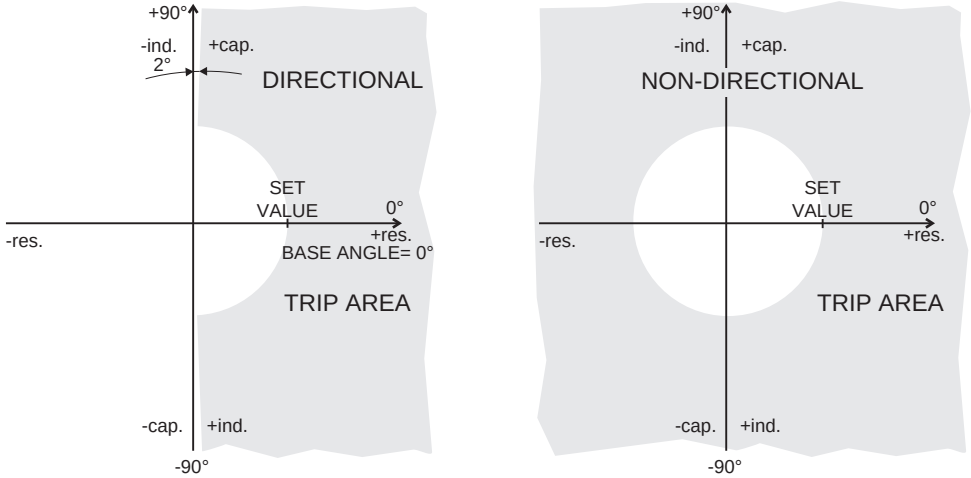

An example of the bidirectional operation characteristic is shown in *Figure 119*. The stage on the right side in this example is stage Iφ> and on the left side Iφ>>. The base angle setting of Iφ> is 0° and the base angle of Iφ>> is set to -180°.

Figure 119 - Bidirectional application with two stages I_{φ}> and I_{φ}>>

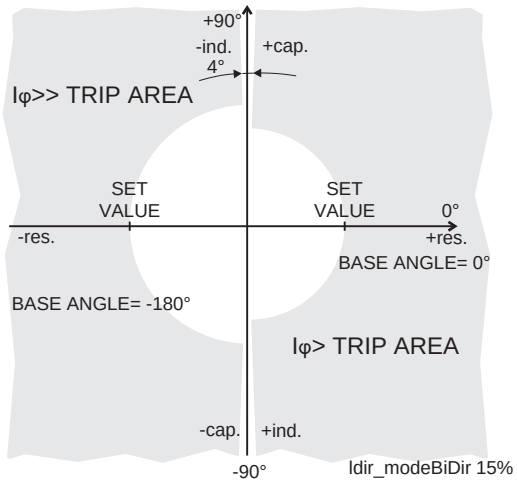

When any of the three-phase currents exceeds the setting value and, in directional mode, the phase angle including the base angle is within the active ±88° wide sector, the stage starts and issues a start signal. If this fault remains on longer than the time defined by the delay setting, a trip signal is issued.

Four independent stages

There are four separately adjustable stages available: I_{φ}>, I_{φ}>>, I_{φ}>>> and I_{φ}>>>>.

Dependent operate time

Stages I_{φ}> and I_{φ}>> can be configured for definite time (DT) or dependent time characteristic. See *5.6 Dependent operate time* for details on the available dependent delays.

Stages I_{φ}>>> and I_{φ}>>>> have definite time operation delay. The relay shows a scaleable graph of the configured delay on the local panel display.

Dependent time limitation

The maximum measured secondary current is 50 x I_N. This limits the scope of dependent curves with high start settings. See *5.6 Dependent operate time* for more information.

Cold load and inrush current handling

See *6.3 Cold load start and magnetizing inrush*.

Setting groups

There are four setting groups available for each stage.

Characteristics

Table 92 - Directional phase overcurrent I_{φ}>, I_{φ}>> (67)

Characteristic	Value
Start value	0.10...4.00 xI_N or x I_{MOT} (step 0.01)
Mode	Directional/Directional+BackUp
Minimum voltage for the direction solving	2 $V_{SECONDARY}$
Base angle setting range	-180°...+179°
Operate angle	±88°
Definite time function: - Operate time	DT[70)] 0.04...300.00 s (step 0.01)
IDMT function: - Delay curve family - Curve type - Inv. time coefficient k	 (DT), IEC, IEEE, RI Prg EI, VI, NI, LTI, MI…depends on the family[71)] 0.025...20.0, except 0.50...20.0 for RXIDG, IEEE and IEEE2
Start time	Typically 30 ms
Reset time	<95 ms
Overshoot time	<50 ms
Reset ratio	0.95

Characteristic	Value
Reset ratio (angle)	2°
Transient overreach, any τ	<10%
Angle memory duration	0.2...3.2 s
Inaccuracy: - Starting (rated value I_N= 1...5 A) - Angle - Operate time at DT function - Operate time at IDMT function	 ±3% of the set value or ±0.5% of the rated value ±2° U>5 V ±30° U = 0.1...5.0 V ±1% or ±25 ms ±5% or at least ±30 ms[70)]

[70)] This is the instantaneous time, that is, the minimum total operate time including the fault detection time and the operate time of the trip contacts. Use the **Accept zero delay** setting in the protection stage setting view in eSetup Easergy Pro to accept the zero operate time setting for the DT function.
[71)] EI = Extremely Inverse, NI = Normal Inverse, VI = Very Inverse, LTI = Long Time Inverse, MI= Moderately Inverse

Table 93 - Directional phase overcurrent I_φ>>>, I_φ>>>> (67)

Characteristic	Value
Start value	0.10...20.00 x I_{MODE} (step 0.01)
Mode	Directional/Directional+BackUp
Minimum voltage for the direction solving	2 $V_{SECONDARY}$
Base angle setting range	-180°...+179°
Operate angle	±88°
Definite time function: - Operate time	DT[72)] 0.04...300.00 s (step 0.01)
Start time	Typically 30 ms
Reset time	<95 ms
Overshoot time	<50 ms
Reset ratio	0.95
Reset ratio (angle)	2°
Transient overreach, any τ	<10%

Characteristic	Value
Angle memory duration	0.2...3.2 s
Inaccuracy: - Starting (rated value I_N= 1...5 A) - Angle - Operate time at DT function	 ±3% of the set value or ±0.5% of the rated value ±2° U>5 V ±30° U = 0.1...5.0 V ±1% or ±25 ms

[72)] This is the instantaneous time, that is, the minimum total operate time including the fault detection time and the operate time of the trip contacts. Use the **Accept zero delay** setting in the protection stage setting view in eSetup Easergy Pro to accept the zero operate time setting for the DT function.

5.32 Directional earth fault overcurrent (ANSI 67N)

ANSI 67N	Feeder	Motor
P3U20	x	x
P3U30	x	x

Description

The directional earth fault overcurrent is used in networks or motors where a selective and sensitive earth fault protection is needed and in applications with varying network structure and length.

The earth fault protection is adapted for various network earth systems.

The function is sensitive to the fundamental frequency component of the earth fault overcurrent and neutral voltage displacement voltage and the phase angle between them. The attenuation of the third harmonic is more than 60 dB. Whenever the size of I_0 and U_0 and the phase angle between I_0 and U_0 fulfils the start criteria, the stage starts and a start signal is issued. If the fault situation remains on longer than the operate time delay setting, a trip signal is issued.

Polarization

The neutral displacement voltage, used for polarization, is measured by energizing input U_0, that is, the angle reference for I_0. Connect the U_0 signal according to the connection diagram. Alternatively, the U_0 can be calculated from the line-to-line voltages internally depending on the selected voltage measurement mode (see *9.13 Voltage measurement modes*):

- 3LN/LL_Y and 3LN/LN_Y: the neutral voltage displacement voltage is calculated from the line-to-line voltages and therefore, no separate neutral voltage displacement voltage transformers are needed. The setting values are relative to the configured voltage transformer (VT) voltage/√3.
- 3LN+U_0, 2LL+U_0, 2LL+U_0+LLy, 2LL+U_0+LNy, LL+U_0+LLy+LLz, and LN +U_0+LNy+LNz: the neutral voltage displacement voltage is measured with voltage transformer(s) for example using a broken delta connection. The setting values are relative to the VT_0 secondary voltage defined in the configuration.

  NOTE: Connect the U_0 signal according to the connection diagram to achieve correct polarization. Connect the negative U_0 , -U_0 to the relay.

Modes for different network types

The available modes are:

- ResCap

  This mode consists of two sub modes, Res and Cap. A digital signal can be used to dynamically switch between these two submodes. When the digital input is active (DI = 1), Cap mode is in use and when the digital input is inactive (DI = 0), Res mode is in use. This feature can be used with compensated networks when the Petersen coil is temporarily switched off.
  - Res

The stage is sensitive to the resistive component of the selected I_0 signal. This mode is used with compensated **networks** (resonant earthing) and **networks earthed with a high resistance**. Compensation is usually done with a Petersen coil between the neutral point of the main transformer and earth. In this context, high resistance means that the fault current is limited to be less than the rated phase current. The trip area is a half plane as drawn in *Figure 122*. The base angle is usually set to zero degrees.

- Cap

  The stage is sensitive to the capacitive component of the selected I_0 signal. This mode is used with **unearthed networks**. The trip area is a half plane as drawn in *Figure 122*. The base angle is usually set to zero degrees.

- Sector

  This mode is used with **networks earthed with a small resistance**. In this context, "small" means that a fault current may be more than the rated phase currents. The trip area has a shape of a sector as drawn in *Figure 123*. The base angle is usually set to zero degrees or slightly on the lagging inductive side (negative angle).

- Undir

  This mode makes the stage equal to the undirectional stage I_0>. The phase angle and U_0 amplitude setting are discarded. Only the amplitude of the selected I_0 input is supervised.

Input signal selection

Each stage can be connected to supervise any of the following inputs and signals:

- Input I_0 for all networks other than solidly earthed.
- Calculated signal $I_{0\ Calc}$ for solidly and low-impedance earthed networks. $I_{0\ Calc} = I_{L1} + I_{L2} + I_{L3} = 3I_0$.

Intermittent earth fault detection

Short earth faults make the protection start but does not cause a trip. A short fault means one cycle or more. For shorter than 1 ms transient type of intermittent earth faults in compensated networks, there is a dedicated stage I_{0INT}> 67NI. When starting happens often enough, such intermittent faults can be cleared using the intermittent time setting.

When a new start happens within the set intermittent time, the operation delay counter is not cleared between adjacent faults and finally the stage trips.

Five independent stages

There are five separately adjustable stages: $I_{0\varphi}$>, $I_{0\varphi}$>>, $I_{0\varphi}$>>>, $I_{0\varphi}$>>>>, and $I_{0\varphi}$>>>>>.All the stages can be configured for definite time delay (DT) or dependent time delay operate time.

Dependent operate time

Accomplished dependent delays are available for all stages $I_{0\varphi}$>, $I_{0\varphi}$>>, $I_{0\varphi}$>>>, $I_{0\varphi}$>>>>, and $I_{0\varphi}$>>>>>.

The relay shows a scalable graph of the configured delay on the local panel display.

Dependent time limitation

The maximum measured secondary earth fault overcurrent is 10 x I_{0N} and the maximum measured phase current is 50 x I_N. This limits the scope of dependent curves with high start settings.

Block diagram

Figure 121 - Block diagram of the directional earth fault overcurrent stages $I_{0\varphi}$>, $I_{0\varphi}$>>, $I_{0\varphi}$>>>, $I_{0\varphi}$>>>>, and $I_{0\varphi}$>>>>>

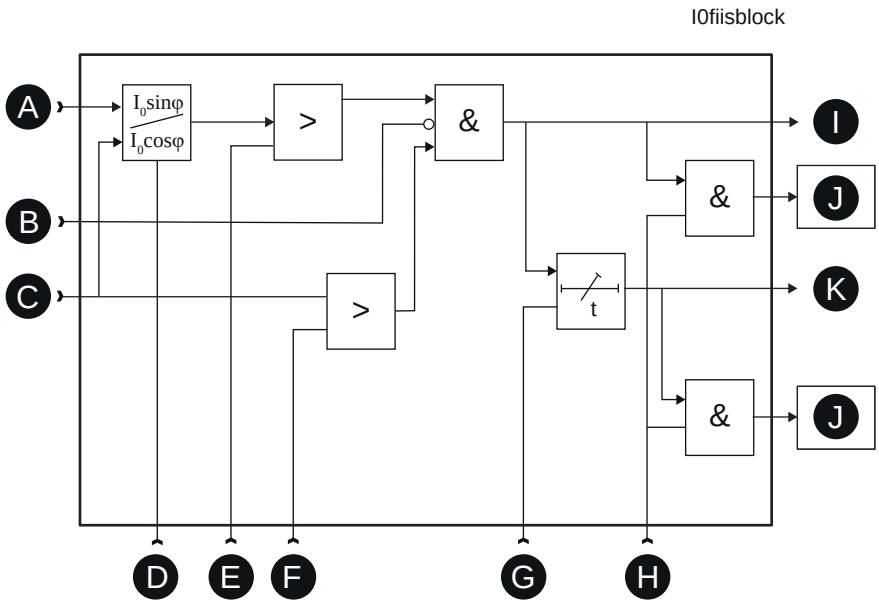

A. I_0
B. Block
C. U_0
D. Choose I_0cosφ (Res) / I_0sinφ (Cap)
E. Setting Iφ > s
F. Setting I_0 > s
G. Delay
H. Enable events
I. Start
J. Register event
K. Trip

Figure 122 - Operation characteristics of the directional earth fault protection in Res and Cap mode

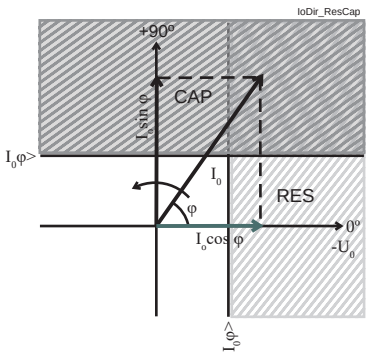

Res mode can be used with compensated networks. Cap mode is used with unearthed networks.

Figure 123 - Operation characteristics examples of the directional earth fault stages in the sector mode

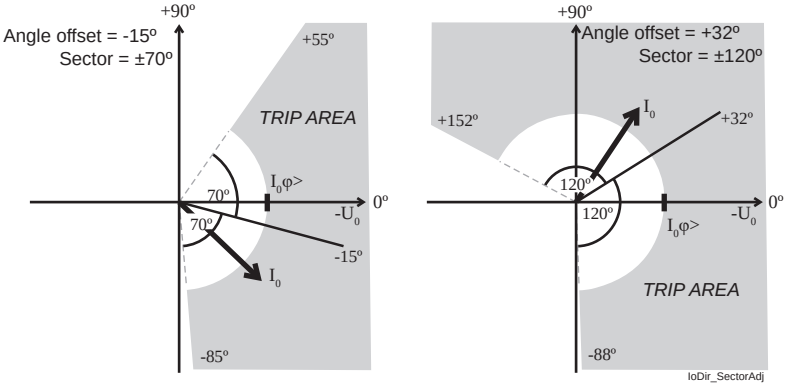

The drawn I_0 phasor is inside the trip area.

The angle offset and half sector size are user's parameters.

Setting groups

There are four setting groups available for each stage.

Characteristics

Table 94 - Directional earth fault overcurrent $I_{0\varphi}$>, $I_{0\varphi}$>> (67N)

Start value $I_{0\varphi}$>	0.005–8.000 pu (when I_{01} or I_{02} measured with standard EF CT) (step 0.001) 0.050–8.000 pu (when I_{01} or I_{02} measured with CSH) (step 0.001) 0.005–20.000 pu (when $I_{0\ Calc}$) (step 0.001)
Start value $I_{0\varphi}$>>	0.01-8.00 pu (when I_{01} or I_{02} measured with standard EF CT) (step 0.01) 0.05-8.00 pu (when I_{01} or I_{02} measured with CSH) (step 0.01) 0.01-20.00 pu (when $I_{0\ Calc}$) (step 0.01)
Start voltage	1–100% U_{0N} (step 0.1%)
Input signal	$I_{0\varphi}$>: I_0, $I_{0\ Calc}$ or $I_{0\ Peak}$ $I_{0\varphi}$>>: I_0 or $I_{0\ Calc}$ Note: $I_{0\ Calc}$ (= I_{L1} + I_{L2} + I_{L3})
Mode	Non-directional/Sector/ResCap
Base angle setting range	-180°–179°
Operate angle	±88°
Definite time function: - Operate time	0.10[73)] – 300.00 s (step 0.02 s)

IDMT function: - Delay curve family - Curve type - Inv. time coefficient k	 (DT), IEC, IEEE, RI Prg EI, VI, NI, LTI, MI…, depends on the family[74)] 0.025–20.0, except 0.50–20.0 for RI, IEEE and IEEE2
Start time	Typically 60 ms
Reset time	< 95 ms
Reset ratio	0.95
Reset ratio (angle)	2°
Inaccuracy:	
- Starting U_0 & I_0 (rated value In= 1–5A)	±3% of the set value or ±0.3% of the rated value
- Starting U_0 & I_0 (Peak Mode when, rated value I_{0n}= 1–10A)	±5% of the set value or ±2% of the rated value (Sine wave <65 Hz)
- Starting U_0 & I_0 ($I_{0\ Calc}$)	±3% of the set value or ±0.5% of the rated value
- Angle	±2° when U> 1V and I_0> 5% of I_{0N} or > 50 mA else ±20°
- Operate time at definite time function	±1% or ±30 ms
- Operate time at IDMT function	±5% or at least ±30 ms[73)]

[73)] This is the instantaneous time, that is, the minimum total operate time including the fault detection time and the operate time of the trip contacts. Use the **Accept zero delay** setting in the protection stage setting view in eSetup Easergy Pro to accept the zero operate time setting for the DT function.
[74)] EI = Extremely Inverse, NI = Normal Inverse, VI = Very Inverse, LTI = Long Time Inverse, MI= Moderately Inverse

Table 95 - Directional earth fault overcurrent $I_{0\varphi}$>>>, $I_{0\varphi}$>>>>, and $I_{0\varphi}$>>>>>(67N)

Start value	0.01-8.00 pu (when I_{01} or I_{02} measured with standard EF CT) (step 0.01) 0.05-8.00 pu (when I_{01} or I_{02} measured with CSH) (step 0.01) 0.01-20.00 pu (when $I_{0\ Calc}$) (step 0.01)
Start voltage	1–100% U_{0N} (step 1%)
Input signal	$I_{0\varphi}$>>>, $I_{0\varphi}$>>>>, and $I_{0\varphi}$>>>>>: I_0 or $I_{0\ Calc}$ Note: $I_{0\ Calc}$ (= I_{L1} + I_{L2} + I_{L3})

Mode	Non-directional/Sector/ResCap
Base angle setting range	-180° – 179°
Operation angle	±88°
Definite time function: - Operate time	 0.04[75] – 300.00 s (step 0.02 s)
IDMT function: - Delay curve family - Curve type - Inv. time coefficient k	 (DT), IEC, IEEE, RI Prg EI, VI, NI, LTI, MI…, depends on the family[76] 0.05–20.0, except 0.50–20.0 for RI, IEEE and IEEE2
Start time	Typically 60 ms
Reset time	< 95 ms
Reset ratio	0.95
Reset ratio (angle)	2°
Inaccuracy:	
- Starting U_0 & I_0 (rated value In= 1 – 5A)	±3% of the set value or ±0.3% of the rated value
- Starting U_0 & I_0 (Peak Mode when, rated value I_{0n}= 1 – 10A)	±5% of the set value or ±2% of the rated value (Sine wave <65 Hz)
- Starting U_0 & I_0 ($I_{0\ Calc}$)	±3% of the set value or ±0.5% of the rated value
- Angle	±2° when U> 1V and I_0> 5% of I_{0N} or > 50 mA else ±20°
- Operate time at definite time function	±1% or ±30 ms
- Operate time at IDMT function	±5% or at least ±30 ms[75]

[75] This is the instantaneous time, that is, the minimum total operate time including the fault detection time and the operate time of the trip contacts. Use the **Accept zero delay** setting in the protection stage setting view in eSetup Easergy Pro to accept the zero operate time setting for the DT function.
[76] EI = Extremely Inverse, NI = Normal Inverse, VI = Very Inverse, LTI = Long Time Inverse, MI= Moderately Inverse

5.32.1 Earth fault faulty phase detection algorithm

The earth fault overcurrent stage (ANSI 50N/51N) and directional earth fault overcurrent stage (ANSI 67N) have an inbuilt detection algorithm to detect a faulty phase. This algorithm is meant to be used in radial-operated distribution networks. The faulty phase detection can be used in solidly-earthed, impedance-earthed or resonant-earthed networks.

Operation

The faulty phase detection starts from the earth fault stage trip. At the moment of stage start, the phase currents measured prior to start are registered and stored as prior-to-fault currents. At the moment of trip, phase currents are registered again. Finally, faulty phase detection algorithm is performed by comparing prior-to-fault currents to fault currents. The algorithm also uses positive sequence current and negative sequence current to detect faulty phase.

The detection algorithm can be enabled and disabled by selecting or unselecting a checkbox in the protection stage settings. Correct network earthing configuration must be selected in the stage settings, too. In the earth fault overcurrent stage settings, you can select between RES and CAP network earthing configuration. This selection has no effect on the protection itself, only on the faulty phase detection. In the directional earth fault overcurrent stage settings, the detection algorithm uses the same network earthing type as selected for protection. RES is used for solidly-earthed, impedance-earthed and resonant-earthed networks. CAP is only used for isolated networks.

The detected faulty phase is registered in the protection stage fault log (and also in the event list and alarm screen). Faulty phase is also indicated by a line alarm and line fault signals in the output matrix.

Possible detections of faulty phases are L1-N, L2-N, L3-N, L1-L2-N, L1-L3-N, L2-L3-N, L1-L2-L3-N, and REV. If the relay protection coordination is incorrect, REV indication is given in case of a relay sympathetic trip to a reverse fault.

5.33 Transient intermittent earth fault (ANSI 67NI)

NOTE: This stage requires direct U_0 measurement, and the voltage transformer scalings mode must contain U_0 selection.

ANSI 67NI	Feeder	Motor
P3U20	x	
P3U30	x	

Description

The directional transient intermittent earth fault protection is used to detect short transient intermittent faults in compensated cable networks. The transient faults are self-extinguished at some zero crossing of the transient part of the fault current I_{Fault} and the fault duration is typically only 0.1 ms – 1 ms. Such short intermittent faults can not be correctly recognized by normal directional earth fault function using only the fundamental frequency components of I_0 and U_0.

Although a single transient fault usually self extinguishes within less than one millisecond, in most cases a new fault happens when the phase-to-earth voltage of the faulty phase has recovered.

Figure 124 - Typical phase-to-earth voltages, earth fault overcurrent of the faulty feeder and the neutral voltage displacement voltage U_0 during two transient earth faults in phase L1. In this case, the network is compensated.

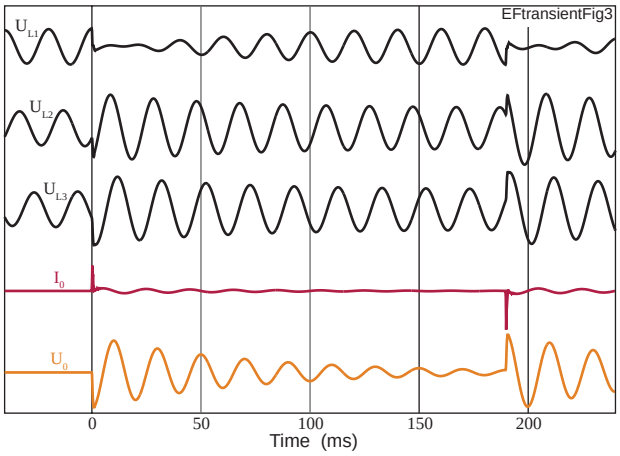

Direction algorithm

The function is sensitive to the instantaneous sampled values of the earth fault overcurrent and neutral voltage displacement voltage. The neutral displacement voltage can be measured directly with a broken delta transformer or derived from the measured phase voltages.

I_0 start sensitivity

The sampling time interval of the relay is 625 µs at 50 Hz (32 samples/cycle). The I_0 current spikes can be quite short compared to this sampling interval. Fortunately, the current spikes in cable networks are high and while the anti-alias

filter of the relay attenuates the amplitude, the filter also makes the pulses wider. Thus, when the current pulses are high enough, it is possible to detect pulses that have a duration of less than twenty percent of the sampling interval. Although the measured amplitude can be only a fraction of the actual peak amplitude, it does not disturb the direction detection because the algorithm is more sensitive to the sign and timing of the I_0 transient than to the absolute amplitude of the transient. Although the sensitivity of the I_0 start is not critical, there is a selection between two fixed settings values of I_0. A sensitive start setting can be used in small networks with lower residual current.

Co-ordination with U_0> backup protection

Especially in a fully compensated situation, the neutral displacement voltage backup protection stage U_0 > for the bus may not release between consecutive faults, and the U_0> might finally do an unselective trip if the transient intermittent stage I_{0INT}> does not operate fast enough. The actual operate time of the I_{0INT}> stage is very dependent on the behavior of the fault and the intermittent time setting. To make the co-ordination between U_0> and I_{0INT}> more simple, the start signal of the transient stage I_{0INT}> in an outgoing feeder can be used to block the U_0> backup protection.

Co-ordination with the normal directional earth fault protection based on fundamental frequency signals

The transient intermittent earth fault current stage I_{0INT}> should always be used together with the normal directional earth fault overcurrent protection stages $I_{0\varphi}$>, $I_{0\varphi}$>>. The transient stage I_{0INT}> may in worst case detect the start of a steady earth fault in wrong direction but does not trip because the peak value of a steady state sine wave I_0 signal must also exceed the corresponding base frequency component's peak value to make the I_{0INT}> to trip.

The operate time of the transient stage I_{0INT}> should be lower than the settings of any directional earth fault overcurrent stage to avoid any unnecessary trip from the $I_{0\varphi}$>, $I_{0\varphi}$>> stages .The start signal of the I_{0INT}> stage can be also used to block $I_{0\varphi}$>, $I_{0\varphi}$>> stages of all parallel feeders.

Auto reclosing

The start signal of any $I_{0\varphi}$> stage initiating auto reclosing (AR) can be used to block the I_{0INT}> stage to avoid the I_{0INT}> stage with a long intermittent setting to interfere with the AR cycle in the middle of discrimination time.

Usually the I_{0INT}> stage itself is not used to initiate any AR. For transient faults, the AR does not help because the fault phenomena itself already includes repeating self-extinguishing.

Operate time, peak amount counter and intermittent time co-ordination

The algorithm has four independently-settable parameters:

- operation delay
- required amount of peaks
- residual voltage limit
- intermittent time

All requirements need to be satisfied before the stage issues a trip signal. Also, the residual voltage requirement needs to be satisfied at the moment of trip.

There is also a settable reset delay: to ensure that the stage does not release before the circuit breaker has operated. The setting range for the required amount of peaks is 1–20 s and the setting range for the operational delay is 0.02–300 s. The reset delay setting range is 0.06–300 s. The intermittent time setting is 0.01–300 s. If, for example, the setting for peaks is set to 2 and the setting for operation delay to 160 ms and intermittent time to 200 ms, then the function starts calculating the operation delay from the first peak and after the second peak in 80 ms peak amount criteria is satisfied and when 160 ms comes full, the operate time criteria is satisfied and the stage issues trip (*Figure 125*). If the second peak does not come before the operational delay comes full, the stage is released after the intermittent time has come full. But if the second peak comes after the operate time has come full but still inside intermittent time, then a trip is issued instantly (*Figure 126*). If the intermittent time comes full before the operation delay comes full, the stage is released (*Figure 127*). There are a of couple limitations to avoid completely incorrect settings. The algorithm assumes that peaks cannot come more often than 10 ms, so if the peak amount is set to 10, then the operation delay does not accept a value smaller than 100 ms and also, if the operational delay is set to 40 ms, then it is not possible to set a peak amount setting higher than 4. This is not fail proof but prohibits the usage of settings that can never be satisfied.

Figure 125 - Set peak amount is satisfied and operate time comes full inside intermittent time setting. Stage issues a trip.

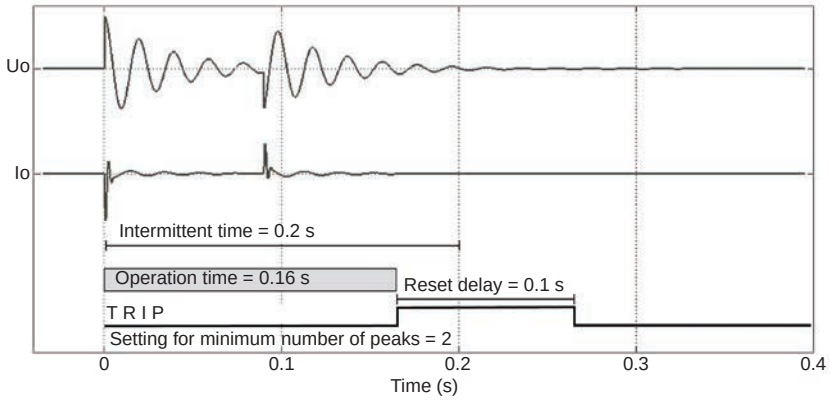

Figure 126 - Peak amount is not satisfied when operation delay comes full but last required peak comes during intermittent time. Stage issues instant trip when peak amount comes satisfied.

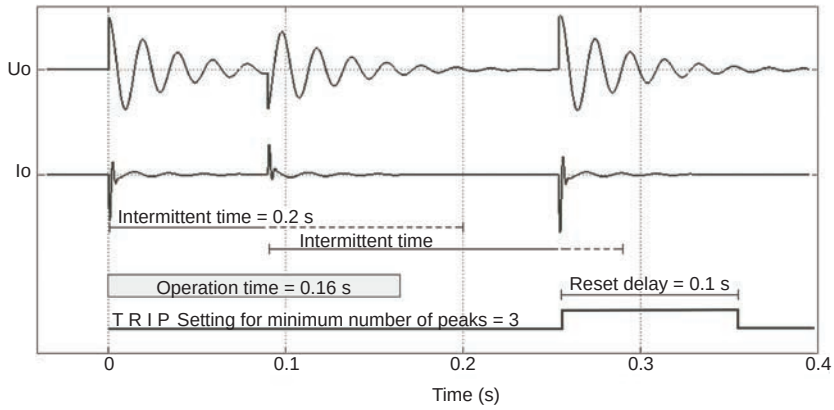

Figure 127 - Peak amount is satisfied but intermittent time comes full before operate time comes full. Stage is released.

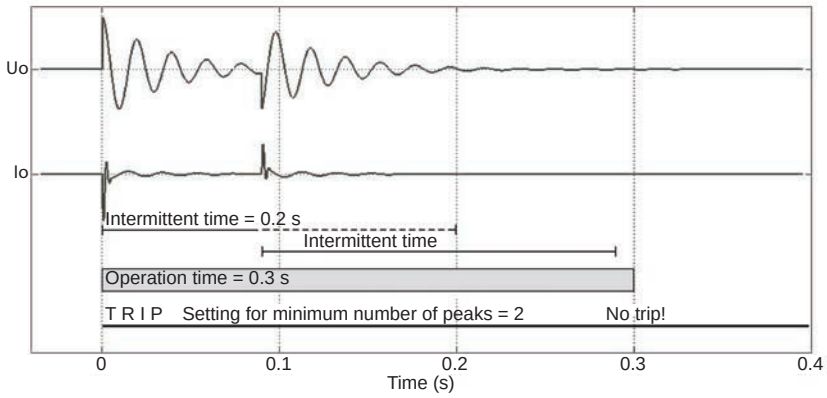

Block diagram

Figure 128 - Block diagram of the directional transient intermittent earth fault stage I_{0INT}>

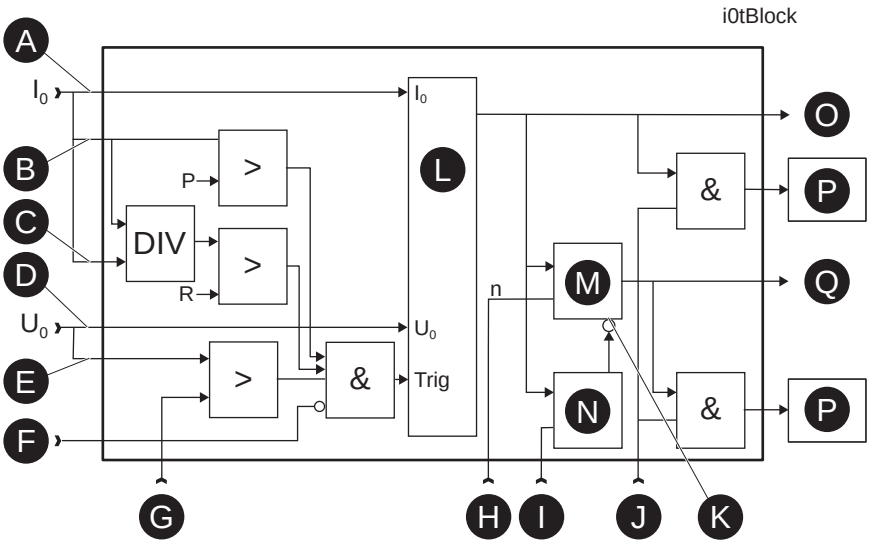

A. I_0 samples
B. I_0 peak
C. I_0 fundamental frequency amplitude
D.U_0 samples
E. U_0 fundamental frequency amplitude
F. Block
G.Setting U_0 pickup
H. Setting Operation delay peak amount
I. Setting Intermittent time
J. Enable events
K. Clear
L. Transient algorithm
M. Counter
N. TOF
O. Start
P. Register event
Q. Trip

Setting groups

There are four setting groups available.

Characteristics

Table 96 - Transient intermittent earth fault I_{0INT}> (67NI)

Input selection for I_0 peak signal	I_0 Connectors X1:7 – 8 or X1:7 – 9
Direction selection	Forward Reverse
I_0 peak start level (fixed)	0.1 pu @ 50 Hz
U_0 start level	1–60% U_{0N} (step 1%)
Definite operate time	0.02–300.00 s (step 0.02)
Intermittent time	0.01–300.00 s (step 0.01)
Start time	Typically 30 ms
Reset time	0.06–300 s

Reset ratio (hysteresis) for U_0	<0.97
Inaccuracy: - Starting - Time	 ±3% for U_0. No inaccuracy defined for I_0 transients ±1% or ±30 ms (The actual operate time depends of the intermittent behavior of the fault and the intermittent time setting.)

5.34 Magnetizing inrush detection (ANSI 68F2)

ANSI 68F2	Feeder	Motor
P3U20	x	x
P3U30	x	x

Description

This stage can be used to block other stages and to indicate possible primary faults in the power distribution network. The ratio between the second harmonic component and the fundamental frequency component is measured on all the phase currents. When the ratio in any phase exceeds the setting value, the stage gives a start signal. After a settable delay, the stage gives a trip signal.

The start and trip signals can be used for blocking the other stages.

The trip delay is irrelevant if only the start signal is used for blocking.

The trip delay of the stages to be blocked must be more than 60 ms to ensure a proper blocking.

Block diagram

Figure 129 - Block diagram of the magnetizing inrush dection stage

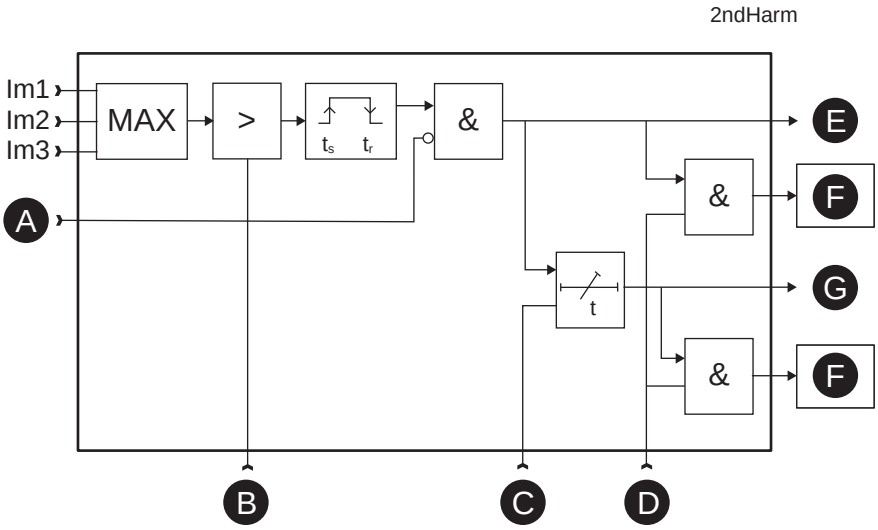

A. Block
B. Setting 2nd harmonics
C. Delay
D. Enable events
E. Start
F. Register event
G. Trip

Characteristics

Table 97 - Magnetizing inrush detection (68F2)

Current input	IL or I'L
Settings: - Start value - Operate time	 10–100 % (step 1%) 0.03–300.00 s (step 0.01 s)
Inaccuracy: - Starting	 ±1% - unit

NOTE: The amplitude of second harmonic content has to be at least 2% of the nominal of CT. If the nominal current is 5 A, the 100 Hz component needs to exceed 100 mA.

5.35 Fifth harmonic detection (ANSI 68H5)

ANSI 68H5	Feeder	Motor
P3U20	x	x
P3U30	x	x

Description

Overexcitation of a transformer creates odd harmonics. The fifth harmonic detection stage can be used detect overexcitation. This stage can also be used to block some other stages.

The ratio between the fifth harmonic component and the fundamental frequency component is measured on all the phase currents. When the ratio in any phase exceeds the setting value, the stage activates a start signal. After a settable delay, the stage operates and activates a trip signal.

The trip delay of the stages to be blocked must be more than 60 ms to ensure a proper blocking.

Characteristics

Table 98 - Fifth harmonic detection (68H5)

Current input	IL or I'L
Settings: - Setting range over exicitation - Operate time	 10–100% (step 1%) 0.03–300.00 s (step 0.01 s)
Inaccuracy: - Starting	 ±2%- unit

5.36 Vector shift (ANSI 78V)

Description

The purpose of the voltage vector shift function is to provide loss of mains (LOM) protection by detecting network islanding or a voltage vector jump in a distributed generation (DG) network.

Vector shift protection is available in P3U30 when the voltage measurement mode contains 3LN or 2LL+Uo and the frequency adaptation mode is Fixed. The voltage measurement mode can be:

- 3LN
- 3LN/LNy
- 3LN/LLy
- 3LN+Uo
- 2LL+Uo

- 2LL+Uo/LNy
- 2LL+Uo/LLy

In other cases, this function is invisible.

Loss of mains is virtually a symmetrical event, and therefore, the vector shift function is based on positive sequence voltage. The phase angle change is determined by comparing the positive sequence voltage phase angle to that of 40 ms.

The internal logic of the voltage vector shift protection is depicted in *Figure 130*. As the measured vector change exceed the set threshold level, the stage starts, and the start signal is issued. Because the vector shift is a one-time phenomenon, the stage start is latched and leads to a trip when the trip time has elapsed. During the trip time, the stage can be reset by various criteria such as undervoltage or unnormal system frequency or by means of the stage block signal.

Using the block signal to reset the vector shift protection differs from normal stage blocking. The PowerLogic P3 platform allows only stage blocking but not reset. With the vector shift function, a stage block signal resets the stage.

Figure 130 - Logic of the vector shift protection

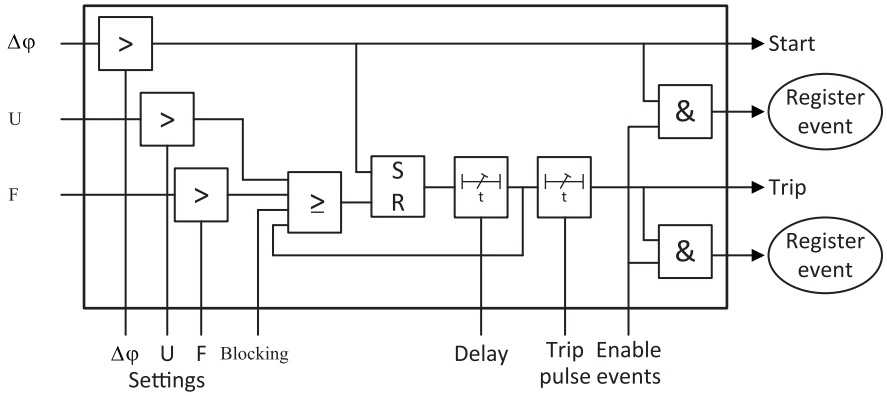

Table 99 - Analogue inputs and digital outputs

Input/output	Description
Input	
U1ShiftAngle	The phase angle change determined by comparing the positive sequence voltage phase angle to that of 40 ms earlier
Output	
78V start	Digital signal to indicate the voltage vector shift angle is over threshold
78V trip	Digital signal to indicate the voltage vector shift angle is over threshold for the settable duration

Angle change

The phase angle change in the logic is determined by comparing the positive sequence voltage phase angle to that of 40 ms earlier.

Figure 131 - Angle change

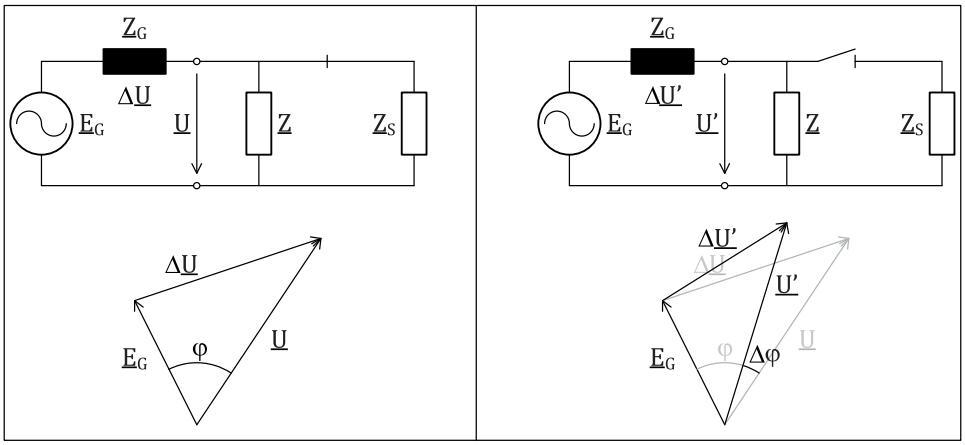

Blocking conditions

There are four blocking conditions:

- The stage is blocked if the measured frequency is out of the range from **(rated frequency – frequency window**) to **(rated frequency + frequency window)**. The rated frequency is set by the **Adapted frequency** setting when **Frequency adaption mode** is configured as “Fixed”.
- The stage is blocked if the positive sequence voltage U1 is out of the range from **Low voltage blocking** to **High voltage blocking**.
- Block matrix: Vector shift can be blocked by other protection stages by configuring the block matrix. For example, we can use the I> start signal to block 78V.

Characteristics

Table 100 - Vector shift (ANSI 78V) settings

Parameter	Description	Range	Step	Default value	Unit	Groups
Enable for 78V	Enable for vector shift	On/Off	N/A	Off	N/A	1
Vector shift	The pickup value or threshold for voltage angle change	2 ~ 30	1	10	°	4

Parameter	Description	Range	Step	Default value	Unit	Groups
Frequency window	Frequency window based on the rated frequency to block vector shift if frequency is out of the window	1 ~ 5	1	3	±Hz	4
Low voltage blocking	Low limit value for positive sequence voltage U1 to block vector shift if U1 is smaller than this value	80 ~ 95	1	90	%Un	4
High voltage blocking	High limit value for positive sequence voltage U1 to block vector shift if U1 is bigger than this value	105 ~ 120	1	110	%Un	4
Operation delay	Vector shift operate time delay	0.10~ 60.00	0.01	0.20	s	4
Trip pulse length	Trip pulse length	0.10~ 60.00	0.01	0.20	s	4

5.37 Auto-recloser function (ANSI 79)

ANSI 79	Feeder	Motor
P3U20	x	
P3U30	x	

Description

The PowerLogic P3 protection relays include a sophisticated auto-recloser (AR) function. The AR function is normally used in feeder protection relays that are protecting an overhead line. Most of the overhead line faults are temporary in nature. Even 85% can be cleared by using the AR function.

The AR function uses the object control function to control objects. All other object control methods are in simultaneous use, including object failure monitoring. If the circuit breaker (CB) control fails or another function controls the CB, the AR sequence stops.

Purpose

Normal protection functions detect the fault and then trigger the AR function. After tripping the circuit breaker, the AR function can reclose the CB. Normally, the first reclose (or shot) is so short in time that consumers cannot notice anything. However, the fault is cleared and the feeder will continue in normal service.

AR working principles

Even though the basic principle of AR is very simple, there are a lot of different timers and parameters that have to be set.

In PowerLogic P3 relays, there are five shots. A shot consists of open time (so called “dead” time) and closed time (so called “burning” time or discrimination time). A high-speed shot means that the dead time is less than one second. The time-delayed shot means longer dead times up to two to three minutes.

There are four AR lines for each shot (1–5). Enable the desired line (AR1-4) to trig the required shot. If none of the AR lines are selected but the AR function is enabled, the AR makes a final trip. A line means an initialization signal for AR. Normally, start or trip signals of protection functions are used to initiate an AR sequence. Each AR line has a priority. AR1 has the highest and AR4 has the lowest priority. This means that if two lines are initiated at the same time, AR follows only the highest priority line. A very typical configuration of the lines is that the instantaneous overcurrent stage initiates the AR1 line, time-delayed overcurrent stage the AR2 line and earth fault protection use lines AR3 and AR4.

The AR matrix in *Figure 132* describes the start and trip signals forwarded to the AR function

Figure 132 - Auto-recloser matrix

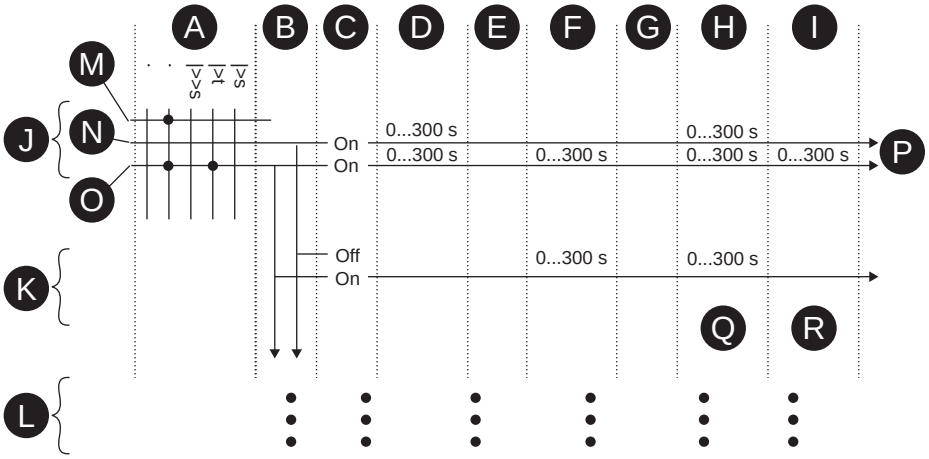

A. AR matrix	**J.** Shot 1
B. Ready (wait for AR request)	**K.** Shot 2
C. Enable	**L.** Shot 3...5
D. Start delay	**M.** Critical
E. Open CB	**N.** AR 1
F. Dead time	**O.** AR 2
G. Close CB	**P.** Reclaim time succeeded. Move back to shot 1.
H. Discrimination time	**Q.** If critical signal is activated during discrimination time, make final trip
I. Reclaim time	**R.** If new AR request is activated during reclaim time, continue on next shot

After the start delay, the CB is opened if it is closed. When the CB opens, a dead time timer is started. Each shot from 1 to 5 has its own dead time setting.

After the dead time, the CB is closed and a discrimination time timer is started. Each shot from 1 to 5 has its own discrimination time setting. If a critical signal is activated during the discrimination time, the AR function makes a final trip. The CB opens and the AR sequence is locked. Closing the CB manually clears the “locked” state.

After the discrimination time has elapsed, the reclaim time timer starts. If any AR signal is activated during the reclaim time or the discrimination time, the AR function moves to the next shot. The reclaim time setting is common for every shot.

If the reclaim time runs out, the AR sequence is successfully executed and the AR function moves to ready state and waits for a new AR request in shot 1.

Configure the protection stage’s start signal to initiate the AR function. A trip signal from the protection stage can be used as a backup. If something fails in the AR function, the trip signal opens the CB. The delay setting for the protection stage should be longer than the AR start delay and discrimination time.

If a critical signal is used to interrupt an AR sequence, the discrimination time setting should be long enough for the critical stage, usually at least 100 ms.

Manual closing

When CB is closed manually with the local panel, remote bus, digital inputs etc, the reclaim state is activated. Within the reclaim time, all AR requests are ignored. The protection stages take care of tripping. Trip signals of protection stages must be connected to a trip relay in the output matrix.

Manual opening

Manual CB open command during AR sequence stops the sequence and leaves the CB open.

Reclaim time setting

- Use shot-specific reclaim time: No

  This reclaim time setting defines reclaim time between different shots during a sequence and also the reclaim time after manual closing.
- Use shot-specific reclaim time: Yes

  This Reclaim time setting defines the reclaim time only for manual control. The reclaim time between different shots is defined by shot-specific reclaim time settings.

Support for two circuit breakers

The AR function can be configured to handle two controllable objects. Objects 1–8 can be configured to CB1 and any other controllable object can be used as CB2. The object selection for CB2 is made with the **Breaker 2 object** setting. Switching between the two objects is done with a digital input, virtual input, virtual output or by choosing **Auto CB selection**. AR controls CB2 when the input defined by the **Input for selecting CB2** setting is active (except when using auto CB selection when operated CB 1 or 2 is that which was last in closed state). Control is changed to another object only if the current object is not closed.

AR shots blocking

Each AR shot can be blocked with a digital input, virtual input or virtual output. The blocking input is selected with the **Block** setting. When selected input is active, the shot is blocked. A blocked shot is treated like it does not exist and AR sequence jumps over it. If the last shot in use is blocked, any AR request during reclaiming of the previous shot causes the final tripping.

Starting AR sequence

Each AR request has its own separate starting delay counter. The AR whose starting delay has elapsed first is selected. If more than one delay elapses at the same time, an AR request of the highest priority is selected. AR1 has the highest priority and AR4 has the lowest priority. First shot is selected according to the AR request. Next AR opens the CB and starts counting dead time.

AR shot 2-5 starting or skipping

Each AR request line can be enabled to any combination of the five shots. For example, making a sequence of **Shot 2** and **Shot 4** for AR request 1 is done by enabling AR1 only for those two shots.

NOTE: If AR sequence is started at shot 2 – 5, the starting delay is taken from the discrimination time setting of the previous shot. For example, if Shot 3 is the first shot for AR2, the starting delay for this sequence is defined by discrimination time of Shot 2 for AR2.

Critical AR request

A critical AR request stops the AR sequence and causes final tripping. The critical request is ignored when the AR sequence is not running.

The critical request is accepted during dead time and discrimination time.

Shot active matrix signals

When a starting delay has elapsed, an active signal is set for the first shot. If successful reclosing is executed at the end of the shot, the active signal is reset after the reclaim time. If the reclosing was not successful or a new fault appears during the reclaim time, the active signal is reset for the current shot and an active signal is set for the next shot (if there are any shots left before the final trip).

AR running matrix signal

This signal indicates dead time. The signal is set after CB is opend. When dead time ends, the signal is reset and CB is closed.

Final trip matrix signals

There are five final trip signals in the matrix, one for each AR request (1 to 4 and 1 critical). When a final trip is generated, one of these signals is set according to the AR request which caused the final tripping. The final trip signal stays active for 0.5 seconds and then resets automatically.

DI to block AR setting

This setting is useful with an external synchro-check relay. This setting only affects re-closing the CB. Re-closing can be blocked with a digital input, virtual input or virtual output. When the blocking input is active, CB is not closed until the blocking input becomes inactive again. When blocking becomes inactive, the CB is controlled close immediately.

Figure 133 - Example sequence of two shots. After shot 2, the fault is cleared.

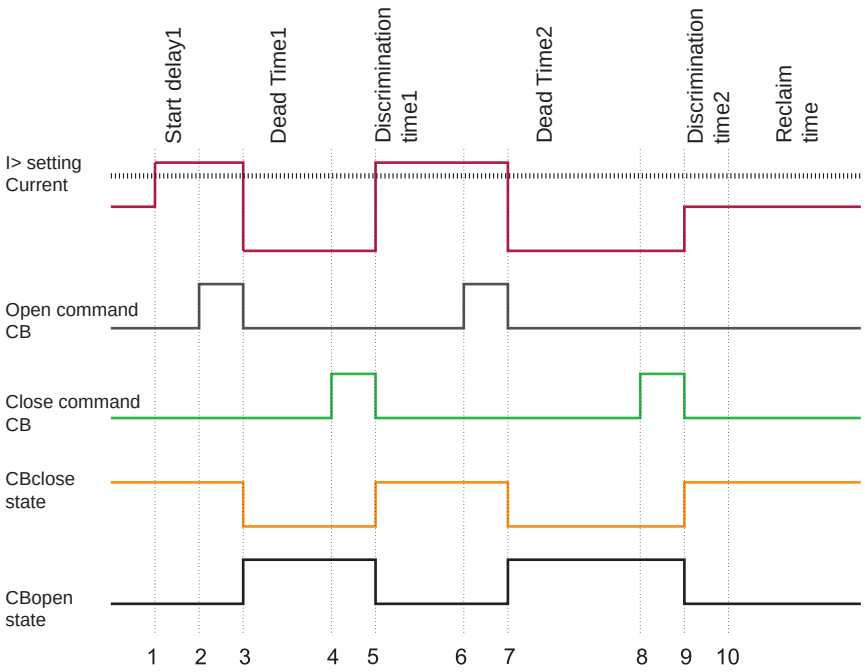

1. The current exceeds the I> setting; the start delay from shot 1 starts.
2. After the start delay, an OpenCB relay output closes.
3. A CB opens. The dead time from shot 1 starts, and the OpenCB relay output opens.
4. The dead time from shot 1 runs out; a CloseCB controlling output closes.
5. The CB closes. The CloseCB controlling output opens, and the discrimination time from shot 1 starts. The current is still over the I> setting.
6. The discrimination time from the shot 1 runs out; the OpenCB relay output closes.
7. The CB opens. The dead time from shot 2 starts, and the OpenCB relay output opens.
8. The dead time from shot 2 runs out; the CloseCB controlling output closes.
9. The CB closes. The CloseCB controlling output opens, and the discrimination time from shot 2 starts. The current is now under I> setting.
10. Reclaim time starts. After the reclaim time the AR sequence is successfully executed. The AR function moves to wait for a new AR request in shot 1.

5.38 Overfrequency and underfrequency (ANSI 81)

ANSI 81	Feeder	Motor
P3U20		
P3U30	x	x

Description

Frequency protection is used for load sharing, loss of power system detection and as a backup protection for overspeeding.

The frequency function measures the frequency from the two first voltage inputs. At least one of these two inputs must have a voltage connected to be able to measure the frequency. Whenever the frequency crosses the start setting of a particular stage, this stage starts, and a start signal is issued. If the fault remains on longer than the operating delay setting, a trip signal is issued. For situations where no voltage is present, an adapted frequency is used.

Protection mode for f>< and f>><< stages

These two stages can be configured either for overfrequency or for underfrequency.

Undervoltage self-blocking of underfrequency stages

The underfrequency stages are blocked when the biggest of the three line-to-line voltages is below the low-voltage block limit setting. With this common setting, LVBlk, all stages in underfrequency mode are blocked when the voltage drops below the given limit. The idea is to avoid purposeless alarms when the voltage is off.

Initial self-blocking of underfrequency stages

When the biggest of the three line-to-line voltages has been below the block limit, the underfrequency stages are blocked until the start setting has been reached.

Five independent frequency stages

There are five separately adjustable frequency stages: f><, f>><<, f<, f<<, f<<<. The two first stages can be configured for either overfrequency or underfrequency usage. So totally five underfrequency stages can be in use simultaneously. Using the programmable stages even more can be implemented (chapter *5.41 Programmable stages (ANSI 99)*). All the stages have definite operate time delay (DT).

Setting groups

There are four setting groups available for each stage.

Characteristics

Table 101 - Overfrequency and underfrequency f><, f>><< (81O/81U)

Frequency measuring area	16.0–75.0 Hz
Current and voltage meas. range	45.0–65.0 Hz
Frequency stage setting range	40.0–70.0 Hz (step 0.01)
Low-voltage blocking	10–100% U_N Suitable frequency area for low voltage blocking is 45 – 65 Hz. Low voltage blocking is checking the maximum of line to line voltages.
Definite time function: -Operate time	 0.08[77)] – 300.0 s (step 0.02 s)
Start time (overfrequency)	< 100 ms
Start time (underfrequency)	< 80 ms (slope change)
Reset time	<120 ms
Reset ratio (f> and f>>)	<0.998
Reset ratio (f< and f<<)	>1.002
Reset ratio (LV block)	Instant (no hysteresis)
Inaccuracy: - Starting - Starting (LV block) - operate time	 ±20 mHz 3% of the set value or ±0.5 V ±1% or ±30 ms

[77)] This is the instantaneous time, that is, the minimum total operate time including the fault detection time and the operate time of the trip contacts. Use the **Accept zero delay** setting in the protection stage setting view in eSetup Easergy Pro to accept the zero operate time setting for the DT function.

NOTE: If the relay restarts for some reason, there is no trip even if the frequency is below the set limit during the start-up (Start and trip is blocked). To cancel this block, frequency has to rise above the set limit.

Table 102 - Underfrequency f<, f<<, f<<< (81L)

Input signal	U_{L1} – U_{L3}
Frequency measuring area	16.0–75.0 Hz
Current and voltage meas. range	45.0–65.0 Hz
Frequency stage setting range	40.0–64.0 Hz

Low-voltage blocking	10–100% U_N Suitable frequency area for low voltage blocking is 45–65 Hz. Low voltage blocking is checking the maximum of line to line voltages.
Definite time function: - operate time	0.08[78)] – 300.0 s (step 0.02 s)
Undervoltage blocking	2–100 %
Start time	< 80 ms (slope change)
Reset time	< 120 ms
Reset ratio	1.002
Reset ratio (LV block)	Instant (no hysteresis)
Inaccuracy: - Starting - starting (LV block) - operate time	 ±20 mHz 3% of the set value or ±0.5 V ±1% or ±30 ms

[78)] This is the instantaneous time, that is, the minimum total operate time including the fault detection time and the operate time of the trip contacts. Use the **Accept zero delay** setting in the protection stage setting view in eSetup Easergy Pro to accept the zero operate time setting for the DT function.

5.39 Rate of change of frequency (ANSI 81R)

ANSI 81R	Feeder	Motor
P3U20		
P3U30	x	x

Description

The rate of change of frequency (ROCOF or df/dt) function is used for fast load shedding, to speed up operate time in overfrequency and underfrequency situations. For example, a centralized dedicated load shedding relay can be omitted and replaced with distributed load shedding, if all outgoing feeders are equipped with PowerLogic P3 relays.

NOTE: Use ROCOF for load shedding only.

Frequency behavior during load switching

Load switching and fault situations may generate change in frequency. A load drop may increase the frequency and increasing load may decrease the frequency, at least for a while. The frequency may also oscillate after the initial change. After a while, the control system of any local generator may drive the frequency back to the original value. However, in case of a heavy short-circuit fault or if the new load exceeds the generating capacity, the average frequency keeps on decreasing.

Figure 134 - An example of definite time df/dt operate time. At 0.6 s, which is the delay setting, the average slope exceeds the setting 0.5 Hz/s and a trip signal is generated.

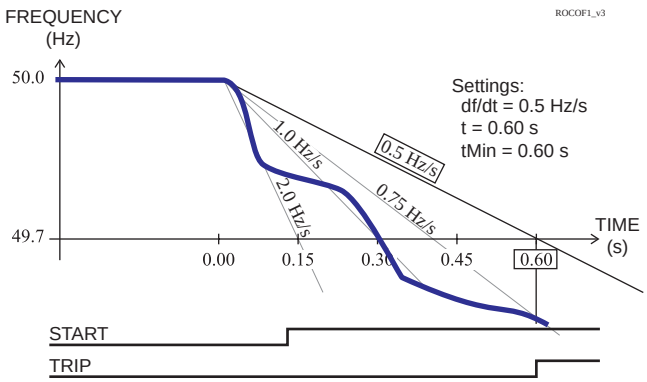

ROCOF implementation

The ROCOF function is sensitive to the absolute average value of the time derivate of the measured frequency |df/dt|. Whenever the measured frequency slope |df/dt| exceeds the setting value for 80 ms time, the ROCOF stage starts and issues a start signal after an additional 60 ms delay. If the average |df/dt|, since the start moment, still exceeds the setting, when the operation delay has elapsed, a trip signal is issued. In this definite time mode the second delay parameter "minimum delay, t_{MIN}" must be equal to the operation delay parameter "t".

If the frequency is stable for about 80 ms and the time t has already elapsed without a trip, the stage resets.

ROCOF and overfrequency and underfrequency stages

One difference between the overfrequency and underfrequency and the df/dt function is the speed. Often a df/dt function can predict an overfrequency or underfrequency situation and is thus faster than a simple overfrequency or underfrequency function. However, in most cases, standard overfrequency and underfrequency stages must be used together with ROCOF to ensure tripping also if the frequency drift is slower than the slope setting of ROCOF.

Definite operate time characteristics

Figure 134 shows an example where the df/dt start value is 0.5 Hz/s and the delay settings are t = 0.60 s and t_{MIN} = 0.60 s. Equal times t = t_{MIN} gives a definite time delay characteristic. Although the frequency slope fluctuates, the stage does not release but continues to calculate the average slope since the initial start. At the defined operate time, t = 0.6 s, the average slope is 0.75 Hz/s. This exceeds the setting, and the stage trips.

At slope settings less than 0.7 Hz/s, the fastest possible operate time is limited according to the *Figure 135*.

Figure 135 - At very sensitive slope settings the fastest possible operate time is limited.

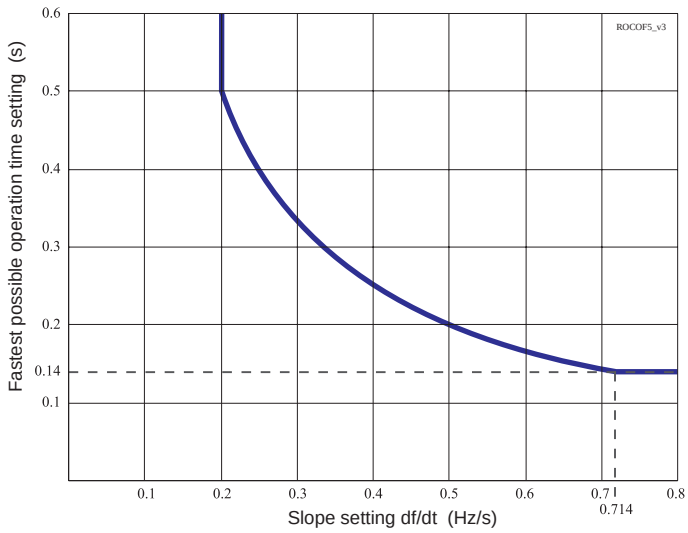

Dependent operate time characteristics

By setting the second delay parameter t_{MIN} smaller than the operate time delay t, a dependent type of operate time characteristic is achieved.

Figure 137 shows one example, where the frequency behavior is the same as in the first figure, but the t_{MIN} setting is 0.15 s instead of being equal to t. The operate time depends on the measured average slope according to the following equation:

Equation 29

$$t_{TRIP} = \frac{s_{SET} \cdot t_{SET}}{|s|}$$

t_{TRIP} = Resulting operate time (seconds).

s_{SET} = df/dt i.e. slope setting (hertz/seconds).

t_{SET} = Operate time setting t (seconds).

s = Measured average frequency slope (hertz/seconds).

The minimum operate time is always limited by the setting parameter t_{MIN}. In the example, the fastest operate time, 0.15 s, is achieved when the slope is 2 Hz/s or more. The leftmost curve in *Figure 136* shows the dependent characteristics with the same settings as in *Figure 137*.

Figure 136 - Three examples of possible dependent df/dt operate time characteristics. The slope and operation delay settings define the knee points on the left. A common setting for tMin has been used in these three examples. This minimum delay parameter defines the knee point positions on the right.

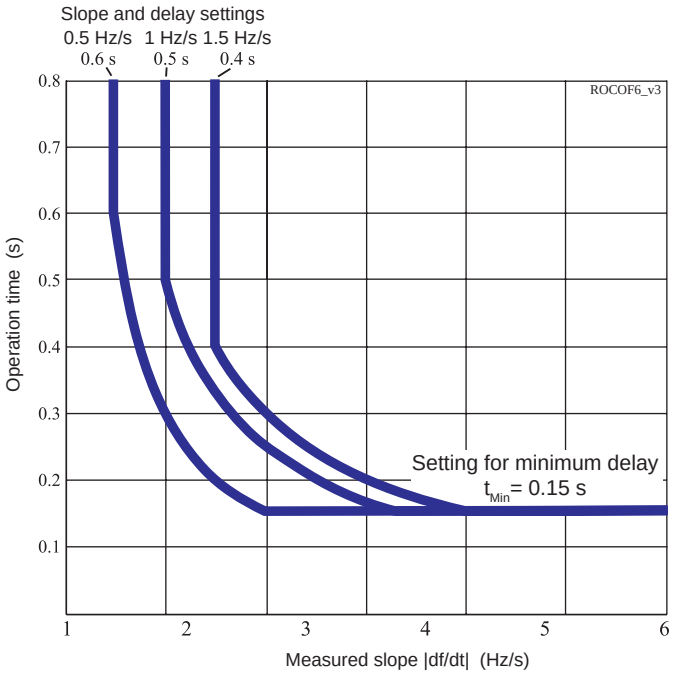

Figure 137 - An example of dependent df/dt operate time. The time to trip will be 0.3 s, although the setting is 0.6 s, because the average slope 1 Hz/s is steeper than the setting value 0.5 Hz/s.

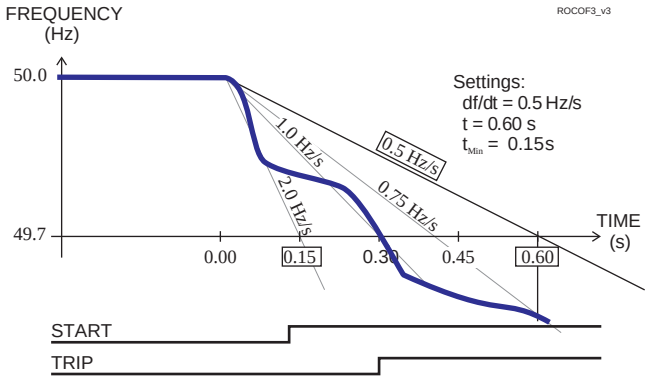

Settings groups

There are four setting groups available.

Characteristics

Table 103 - Rate of change of frequency df/dt> (81R)

Start setting df/dt	0.2–10.0 Hz/s (step 0.1 Hz/s)
Definite time delay (t> and t_{Min}> are equal): - Operate time t>	0.14[79)] – 10.00 s (step 0.02 s)
Dependent time delay (t> is more than t_{Min}>): - Minimum operate time t_{Min}>	0.14[79)] – 10.00 s (step 0.02 s)
Start time	Typically 140 ms
Reset time	150 ms
Overshoot time	< 90 ms
Reset ratio	1
Inaccuracy: - Starting - Operate time(overshoot ≥ 0.2 Hz/s)	 10% of set value or ±0.1 Hz/s ±35 ms, when area is 0.2 – 1.0 Hz/s

[79)] This is the instantaneous time, that is, the minimum total operate time including the fault detection time and the operate time of the trip contacts. Use the **Accept zero delay** setting in the protection stage setting view in eSetup Easergy Pro to accept the zero operate time setting for the DT function.

NOTE: ROCOF stage is using the same low voltage blocking limit as the frequency stages.

5.40 Lockout (ANSI 86)

ANSI 86	Feeder	Motor
P3U20	x	x
P3U30	x	x

Description

The lockout feature, also called latching, can be programmed for outputs in the **Output matrix** setting view. Any protection stage start or trip, digital input, logic output, alarm and GOOSE signal connected to the following outputs can be latched when required:

- output contacts T1 – T7, A1
- LEDs on the front panel
- virtual outputs VO1- VO20

Figure 138 - The lockout programmed for LED A and I>> trip signals

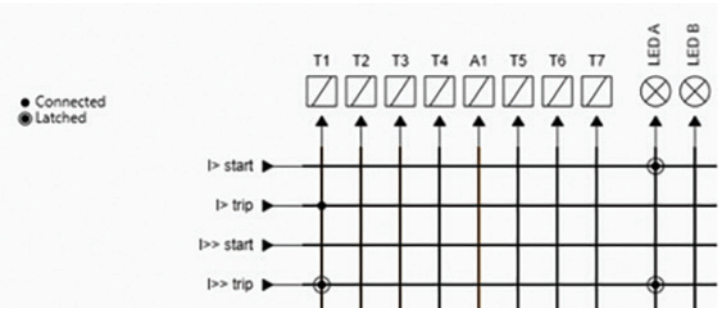

In *Figure 138*, the latched signal is identified with a dot and circle in the matrix signal line crossing.

The lockout can be released through the display or via the eSetup Easergy Pro. See Chapter 4 Control functions.

Storing latch states

In the **General > Release latches** setting view, select the **Store latch state** setting to configure latched states of relay outputs, virtual outputs, binary outputs (BO) and high-speed outputs (HSO) to be stored. If some of these outputs are latched and in “on” state, and the device is restarted, their status is set back to “on” after restart.

Figure 139 - Store latch setting view

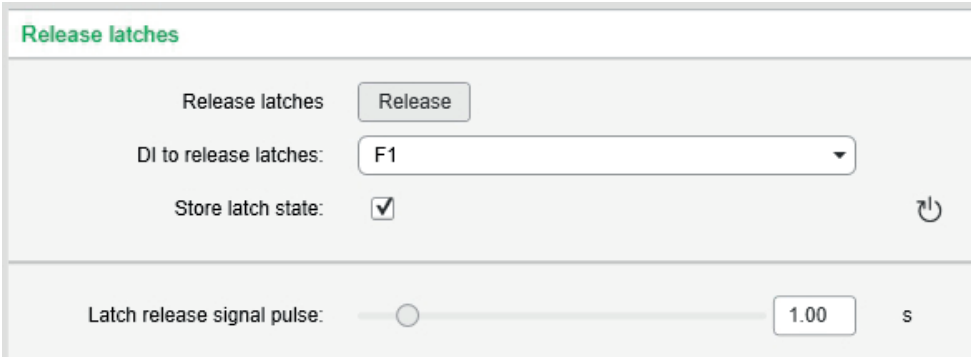

5.41 Programmable stages (ANSI 99)

ANSI 99	Feeder	Motor
P3U20	x	x
P3U30	x	x

Description

For special applications, you can build your own protection stages by selecting the supervised signal and the comparison mode.

The following parameters are available:

- **Priority:** Protection task execution cycle. If operate times less than 80 milliseconds are needed, select 10 ms. For operate times under one second, 20 ms is recommended. For longer operation times and THD signals, 100 ms is recommended.
- **Time-base for input value A:** ”Instant” is the latest available value of the measurement. The other ones are average values of the measurement during the given time. The average values are calculated for different purposes all the time, for example, the 200 ms value is used to update the local display.

  NOTE: Pay attention to selecting these timing values. For example, having a short operate time but 1 minute time base does not necessarily give the expected result. Using long time bases gives the possibility to use a filtered value to avoid unnecessary operations.
- **Coupling A:** The selected supervised signal in “>” and “<” mode. The available signals are shown in the table below.
- **Coupling B:** The selected supervised signal in "Diff" and "AbsDiff" mode. This selection becomes available once "Diff" or "AbsDiff" is chosen for Coupling A.
- **Compare condition:** Compare mode. ‘>’ for over or ‘<’ for under comparison, “Diff” and “AbsDiff” for comparing Coupling A and Coupling B.
- **AbsDiff | d |:** Coupling A – coupling B. The stage activates if the difference is greater than the start setting.
- **Diff d:** Coupling A – coupling B. The stage activates if the sign is positive and the difference greater than the start setting.
- **Start:** Limit of the stage. The available setting range and the unit depend on the selected signal.
- **Operation delay:** Definite time operation delay
- **Hysteresis:** Dead band (hysteresis). For more information, see *5.3 General features of protection stages*.
- **No Compare limit for mode < :** Only used with compare mode under (‘<’). This is the limit to start the comparison. Signal values under NoCmp are not regarded as fault.

Table 104 - Available signals to be supervised by the programmable stages

I_{L1}, I_{L2}, I_{L3}	Phase currents (RMS values)
U_{12}, U_{23}, U_{31}	Line-to-line voltages
I_0	Earth fault overcurrent

U_{L1}, U_{L2}, U_{L3}	Line-to-neutral voltages
U_0	Neutral displacement voltage
f	Frequency
P	Active power
Q	Reactive power
S	Apparent power
Cos Phi	Cosine φ
$I_{0\ Calc}$	Phasor sum $\underline{I}_{L1} + \underline{I}_{L2} + \underline{I}_{L3}$
I1	Positive sequence current
I2	Negative sequence current
I2/I1	Relative negative sequence current
I2/In	Negative sequence current in pu
U_1	Positive sequence overvoltage
U_2	Negative sequence overvoltage
U_2/U_1	Relative negative sequence voltage
IL	Average $(I_{L1} + I_{L2} + I_{L3}) / 3$
Tan Phi	Tangent φ [= tan(arccosφ)]
PRMS	Active power RMS value
QRMS	Reactive power RMS value
SRMS	Apparent power RMS value
THDIL1	Total harmonic distortion of I_{L1}
THDIL2	Total harmonic distortion of I_{L2}
THDIL3	Total harmonic distortion of I_{L3}
$THDU_A$	Total harmonic distortion of input U_A
$THDU_B$	Total harmonic distortion of input U_B
$THDU_C$	Total harmonic distortion of input U_C
fy	Frequency behind circuit breaker
fz	Frequency behind 2nd circuit breaker
IL1RMS	I_{L1} RMS for average sampling

IL2RMS	I_{L2} RMS for average sampling
IL3RMS	I_{L3} RMS for average sampling
ILmin, ILmax	Minimum and maximum of phase currents
ULLmin, ULLmax	Minimum and maximum of line voltages
ULNmin, ULNmax	Minimum and maximum of line-to-neutral voltages
VAI1, VAI2, VAI3, VAI4, VAI5	Virtual analog inputs 1, 2, 3, 4, 5 (GOOSE)

Eight independent stages

The relay has eight independent programmable stages. Each programmable stage can be enabled or disabled to fit the intended application.

Setting groups

There are four settings groups available.

See *5.3 General features of protection stages* for more details.

6 Supporting functions

6.1 Event log

Event log is a buffer of event codes and time stamps including date and time. For example, each start-on, start-off, trip-on or trip-off of any protection stage has a unique event number code. Such a code and the corresponding time stamp is called an event.

As an example, a typical event of programmable stage trip event is shown in *Table 105*.

Table 105 - Example of Pgr1 stage trip on event and its visibility in local panel and communication protocols

EVENT	Description	Local panel	Communication protocols
Code: 01E02	Channel 1, event 2	Yes	Yes
Prg1 trip on	Event text	Yes	No
2.7 x In	Fault value	Yes	No
2007-01-31	Date	Yes	Yes
08:35:13.413	Time	Yes	Yes
Type: U12, U23, U31	Fault type	Yes	No

Events are the major data for a SCADA system. SCADA systems are reading events using any of the available communication protocols. The Event log can also be scanned using the front panel or eSetup Easergy Pro. With eSetup Easergy Pro, the events can be stored to a file especially if the relay is not connected to any SCADA system.

Only the latest event can be read when using communication protocols or eSetup Easergy Pro. Every reading increments the internal read pointer to the event buffer. (In case of communication interruptions, the latest event can be reread any number of times using another parameter.) On the local panel, scanning the event buffer back and forth is possible.

Event enabling/masking

An uninteresting event can be masked, which prevents it to be written in the event buffer. By default, there is room for 200 latest events in the buffer. The event buffer size can be modified from 50 to 2000. The existing events are lost if the event buffer size is changed.

You can make this modification in the **Local panel conf** setting view.

An indication screen (popup screen) can also be enabled in the same menu in eSetup Easergy Pro. The oldest event is overwritten when a new event occurs. The shown resolution of a time stamp is one millisecond, but the actual resolution depends on the particular function creating the event. For example, most

protection stages create events with 5 ms, 10 ms or 20 ms resolution. The absolute accuracy of all time stamps depends on the relay's time synchronization. See *6.4 System clock and synchronization* for system clock synchronizing.

Event buffer overflow

The normal procedure is to poll events from the relay all the time. If this is not done, the event buffer could reach its limits. In that case, the oldest event is deleted and the newest displayed with OVF (overflow) code on the front panel.

Table 106 - Setting parameters for events

Parameter	Value	Description	Note
Count		Number of events	
ClrEv	- Clear	Clear event buffer	Set
Order	Old-New New-Old	Order of the event buffer for local display	Set
FVScal		Scaling of event fault value	Set
	PU	Per unit scaling	
	Pri	Primary scaling	
Display Alarms	On Off	Indication dispaly is enabled No indication display	Set
Sync		Controls event time format	
	On Off	Event time shown normally if relay is synchronized Event time is shown in brakets if relay is not synchronized	
FORMAT OF EVENTS ON THE LOCAL DISPLAY			
Code: CHENN		CH = event channel, NN=event code (channel number is not shown in case channel is zero)	
Event description		Event channel and code in plain text	

Parameter	Value	Description	Note
yyyy-mm-dd		Date (for available date formats, see *6.4 System clock and synchronization*)	
hh:mm:ss.nnn		Time	

6.2 Disturbance recording

The disturbance recorder (DR) can be used to record all the measured signals, that is, currents, voltage and the status information of digital inputs (DI) and digital outputs (DO). If the sample rate is slower than 1/10 ms, also the calculated signals like active power, power factor, negative sequence overcurrent and so on can be recorded. For a complete list of signals, see *Table 107*.

The available recording channels depend on the voltage measurement mode, too. If a channel is added for recording and the added signal is not available because of the used settings, the signal is automatically rejected from the recording channel list.

NOTE: When protection stages are enabled or disabled or the recorder signals or recording time changed, the disturbance recordings are deleted from the relay's memory. Therefore, before activating or deactivating stages, store the recordings on your PC.

Triggering the recording

The recording can be triggered by any start or trip signal from any protection stage, by a digital input, logic output or GOOSE signals. The triggering signal is selected in the output matrix (vertical signal DR). The recording can also be triggered manually. All recordings are time-stamped.

Reading recordings

The recordings can be uploaded with eSetup Easergy Pro program. The recording is in COMTRADE format. This also means that other programs can be used to view and analyse the recordings made by the relay.

Number of channels

A maximum of 24 records can be stored. Up to 12 channels per record can be stored. Both the digital inputs and the digital outputs (including all inputs and outputs) use one channel out of the total of 12.

Figure 140 - Recorder channels

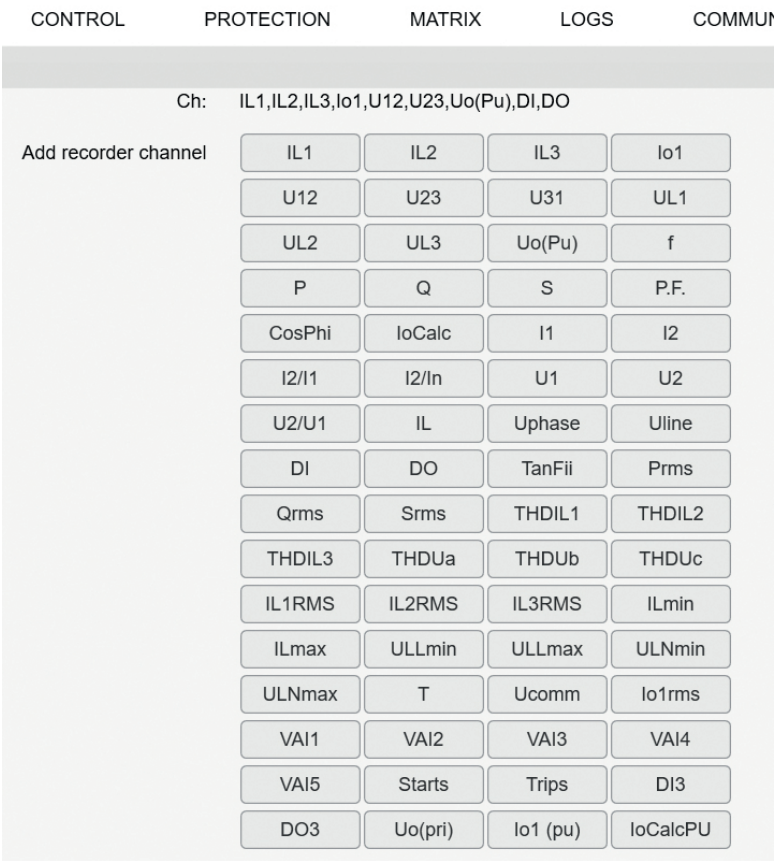

Parameters

Table 107 - Disturbance recording parameters

Parameter	Value	Unit	Description	Note
Mode			Behavior in memory full situation:	Set[80)]
	Saturated		No more recordings are accepted	
	Overflow		The oldest recording is overwritten	
SR			Sample rate	Set
	32/cycle		Waveform	
	16/cycle		Waveform	
	8/cycle		Waveform	
	1/10ms		One cycle value[81)]	
	1/20ms		One cycle value [82)]	
	1/200ms		Average	
	1/1s		Average	

Parameter	Value	Unit	Description	Note
	1/5s		Average	
	1/10s		Average	
	1/15s		Average	
	1/30s		Average	
	1/1min		Average	
Time		s	Recording length	Set
PreTrig		%	Amount of recording data before the trig moment	Set
MaxLen		s	Maximum time setting. This value depends on the sample rate, number and type of the selected channels and the configured recording length.	
ReadyRec			Readable recordings	
Status			Status of recording	
	-		Not active	
	Run		Waiting a triggering	
	Trig		Recording	
	FULL		Memory is full in saturated mode	
ManTrig	-, Trig		Manual triggering	Set
ReadyRec	n/m		n = Available recordings / m = maximum number of recordings The value of 'm' depends on the sample rate, number and type of the selected channels and the configured recording length.	

80) Set = An editable parameter (password needed).
81) This is the fundamental frequency rms value of one cycle updated every 10 ms.
82) This is the fundamental frequency rms value of one cycle updated every 20 ms.

Table 108 - Disturbance recording parameters

Parameter	Value	Unit	Description	Average	Wave-form
ClrCh	-, Clear		Remove all channels		
AddCh			Add one channel. The maximum number of channels used simultaneously is 12.		
	IL1, IL2, IL3		Phase current	X	X
	I_0		Measured earth fault overcurrent in primary unit	X	X

Parameter	Value	Unit	Description	Average	Wave-form
	U12, U23, U31		Line-to-line voltage	X	X
	UL1, UL2, UL3		Phase-to-neutral voltage	X	X
	U_0 (pu)		Neutral displacement voltage in pu unit	X	X
	f		Frequency	X	X
	P, Q, S		Active, reactive, apparent power	X	
	P.F.		Power factor	X	
	CosPhi		cosφ	X	
	$I_{0\ Calc}$		Phasor sum Io = $(I_{L1}+I_{L2}+I_{L3})/3$ in primary unit	X	
	I_1		Positive sequence current	X	
	I_2		Negative sequence current	X	
	I_2/I_1		Relative current unbalance	X	
	I_2/I_N		Negative sequence overcurrent [x I_N]	X	
	U_1		Positive sequence voltage	X	
	U_2		Negative sequence voltage	X	
	U_2/U_1		Relative negative sequence voltage	X	
	I_L		Average $(I_{L1} + I_{L2} + I_{L3}) / 3$	X	
	Uphase		Average line-to-neutral voltage	X	
	Uline		Average line-to-lines voltages	X	
	DI		Digital inputs: DI1–20, F1, F2, BIOin, VI1-4, Arc1, Arc2	X	X
	DI_2		Digital inputs: DI21–40	X	X
	DI_3		Virtual inputs: VI5–20, A1–A5, VO1–VO6	X	X
	DO		Digital outputs: T1–15	X	X
	DO_2		Rest of the outputs	X	X
	DO_3		Virtual outputs, VO7–VO20	X	X
	TanPhi		tanφ	X	

Parameter	Value	Unit	Description	Average	Wave-form
	THDIL1, THDIL2, THDIL3		Total harmonic distortion of IL1, IL2 or IL3	X	
	THDUa, THDUb, THDUc		Total harmonic distortion of Ua, Ub or Uc	X	
	Qrms		Reactive power rms value	X	
	Srms		Apparent power rms value	X	
	fy		Frequency behind circuit breaker	X	
	fz		Frequency behind 2nd circuit breaker	X	
	U_{12y}		Voltage behind circuit breaker	X	X
	U_{12z}		Voltage behind 2nd circuit breaker	X	X
	IL1RMS, IL2MRS, IL3RMS		IL1, IL2, IL3 RMS for average sampling	X	
	Starts		Protection stage start signals	X	X
	Trips		Protection stage trip signals	X	X
	Uo(pri)		Neutral displacement voltage in primary unit	X	X
	I_0(pu)		Measured earth fault overcurrent in pu unit	X	X
	IoCalcPU		Phasor sum Io = $(I_{L1}+I_{L2}+I_{L3})/3$ in pu unit	X	

NOTE: The selection of signals depends on the relay type, the used voltage connection and the scaling mode.

NOTE: For waveform, IoCalc (Primary or Pu) can be added only if IL1, IL2 and IL3 are already on the DR channel list. Uo (Primary or Pu) can be added only if UL1, UL2 and UL3 are already on the DR channel list or Uo is measured directly from samples (the voltage measurement mode contains Uo).

Characteristics

Table 109 - Disturbance recording

Mode of recording	Saturated / Overflow
Sample rate: - Waveform recording - Trend curve recording	- 32/cycle, 16/cycle, 8/cycle 10, 20, 200 ms 1, 5, 10, 15, 30 s 1 min
Recording time (one record)	0.1 s–12 000 min (According recorder setting)
Pre-trigger rate	0–100%
Number of selected channels	0–12
File format	IEEE Std C37.111-1999

The recording time and the number of records depend on the time setting and the number of selected channels.

6.2.1 Configuring the disturbance recorder

NOTE: The DR configuration can only be edited when connected to the device via eSetup Easergy Pro

1. To select the channels and sample rate for the disturbance recorder:
   a. In eSetup Easergy Pro, go to **General > Disturbance recorder**.
   b. Click the recorder channels you want to add.
   c. Click the **Sample rate** drop-down list, and select the desired rate.
2. To download the disturbance recorder file, select **Tools > Download disturbance records**.

   NOTE: The default (pre-configured) settings for DR are:
   - all analog inputs supported by the device
   - DI, DO
   - Sampling rate: 32 s/c
   - Recording length: 1 s'
   - Output matrix: connection in every trip line to DR

Figure 141 - Configuring the disturbance recorder

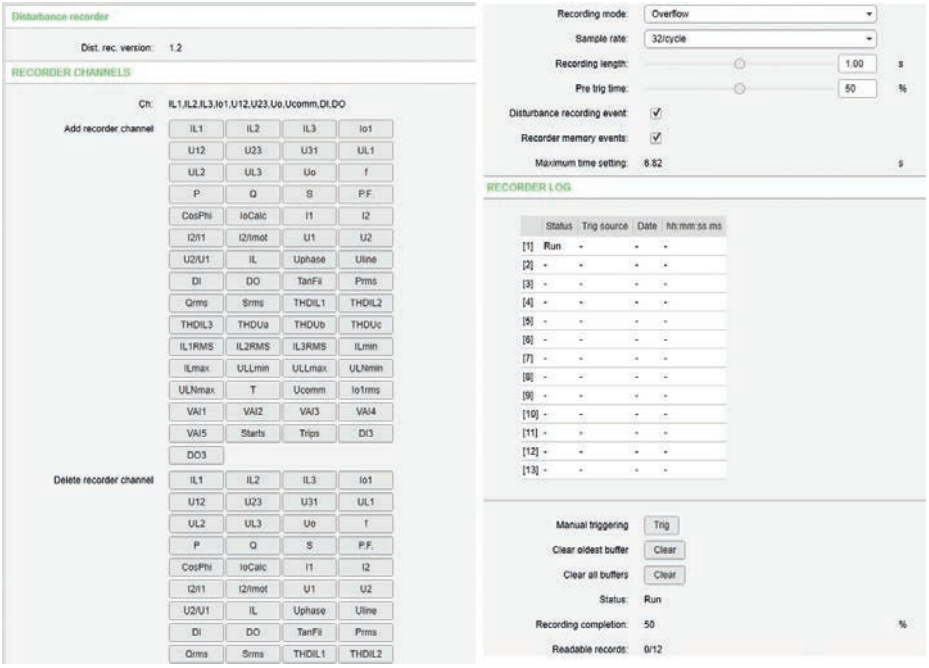

3. To write the setting to the device, on the eSetup Easergy Pro toolbar, select **Write settings > Write all settings**.

   NOTE: To save the relay's configuration information for later use, also save the eSetup Easergy Pro setting file on the PC. Use WaweWin or another customer preferred tool to analyze disturbance recorder file.

4. To save the setting file on your PC:

   a. On the eSetup Easergy Pro toolbar, click the **Save** icon. The **Save a file** window opens.

   b. Browse to the folder where you want to save the file. Type a descriptive file name, and click **Save**.

      NOTE: By default, the setting file *.epz is saved in the eSetup Easergy Pro folder.

6.3 Cold load start and magnetizing inrush

Cold load start

A situation is regarded as cold load when all the three phase currents have been below a given idle value and then at least one of the currents exceeds a given start level within 80 ms. In such a case, the cold load detection signal is activated for the time set as **Maximum time** or until the measured signal returns below the value set as **Pickup current**. This signal is available for the output matrix and blocking matrix. Using virtual outputs of the output matrix setting group control is possible.

Application for cold load detection

Right after closing a circuit breaker, a given amount of overload can be allowed for a given limited time to take care of concurrent thermostat-controlled loads. The

cold load start function does this, for example, by selecting a more coarse setting group for overcurrent stages. It is also possible to use the cold load detection signal to block any set of protection stages for a given time.

Magnetizing inrush detection

Magnetizing inrush detection is quite similar to the cold load detection but it also includes a condition for second harmonic content of the currents. When all phase currents have been below a given idle value and then at least one of them exceeds a given start level within 80 ms and the second harmonic ratio to fundamental frequency, I_{f2}/I_{f1}, of at least one phase exceeds the given setting, the inrush detection signal is activated. This signal is available for the output matrix and blocking matrix. Using virtual outputs of the output matrix setting group control is possible.

By setting the second harmonic start parameter for I_{f2}/I_{f1} to zero, the inrush signal will behave equally with the cold load start signal.

Application for inrush current detection

The inrush current of transformers usually exceeds the start setting of sensitive overcurrent stages and contains a lot of even harmonics. Right after closing a circuit breaker, the start and tripping of sensitive overcurrent stages can be avoided by selecting a more coarse setting group for the appropriate overcurrent stage with an inrush detect signal. It is also possible to use the detection signal to block any set of protection stages for a given time.

NOTE: Inrush detection is based on the fundamental component calculation which requires a full cycle of data for analyzing the harmonic content. Therefore, when using the inrush blocking function, the cold load start starting conditions are used for activating the inrush blocking when the current rise is noticed. If a significant ratio of second harmonic components is found in the signal after the first cycle, the blocking is continued. Otherwise, the second-harmonic-based blocking signal is released. Inrush blocking is recommended to be used on time-delayed overcurrent stages while the non-blocked instant overcurrent stage is set to 20% higher than the expected inrush current. By this scheme, a fast reaction time in short circuit faults during the energization can be achieved while time-delayed stages are blocked by the inrush function.

Figure 142 - Functionality of cold load / inrush current feature

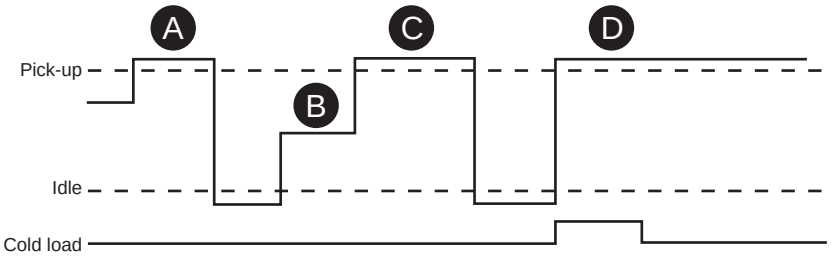

A. No activation because the current has not been under the set I_{DLE} current.

B. Current dropped under the I_{DLE} current level but now it stays between the I_{DLE} current and the start current for over 80 ms.

C. No activation because the phase two lasted longer than 80 ms.

D. The cold load activation will last until maximum time setting has elapsed or current drops below the cold load pickup setting level, which ever takes place first.

Characteristics

Table 110 - Magnetizing inrush detection

Cold load settings: - Current input - Idle current - Start current - Maximum time	 IL or I'L 0.01–0.50 x I_N 0.30–10.00 x I_N 0.01[83] – 300.00 s (step 0.01 s)
Inrush settings: - Start for 2nd harmonic	 0–99%

[83] This is the instantaneous time, that is, the minimum total operate time including the fault detection time and the operate time of the trip contacts. Use the **Accept zero delay** setting in the protection stage setting view in eSetup Easergy Pro to accept the zero operate time setting for the DT function.

6.4 System clock and synchronization

Description

The relay's internal clock is used to time-stamp events and disturbance recordings.

The system clock should be externally synchronised to get comparable event time stamps for all the relays in the system.

The synchronizing is based on the difference of the internal time and the synchronizing message or pulse. This deviation is filtered and the internal time is corrected softly towards a zero deviation.

Time zone offsets

Time zone offset (or bias) can be provided to adjust the relay's local time. The offset can be set as a Positive (+) or Negative (-) value within a range of -15.00 to +15.00 hours and a resolution of 0.01/h. Basically, resolution by a quarter of an hour is enough.

Daylight saving time (DST)

The relay provides automatic daylight saving adjustments when configured. A daylight saving time (summer time) adjustment can be configured separately and in addition to a time zone offset.

Figure 143 - **System clock** view

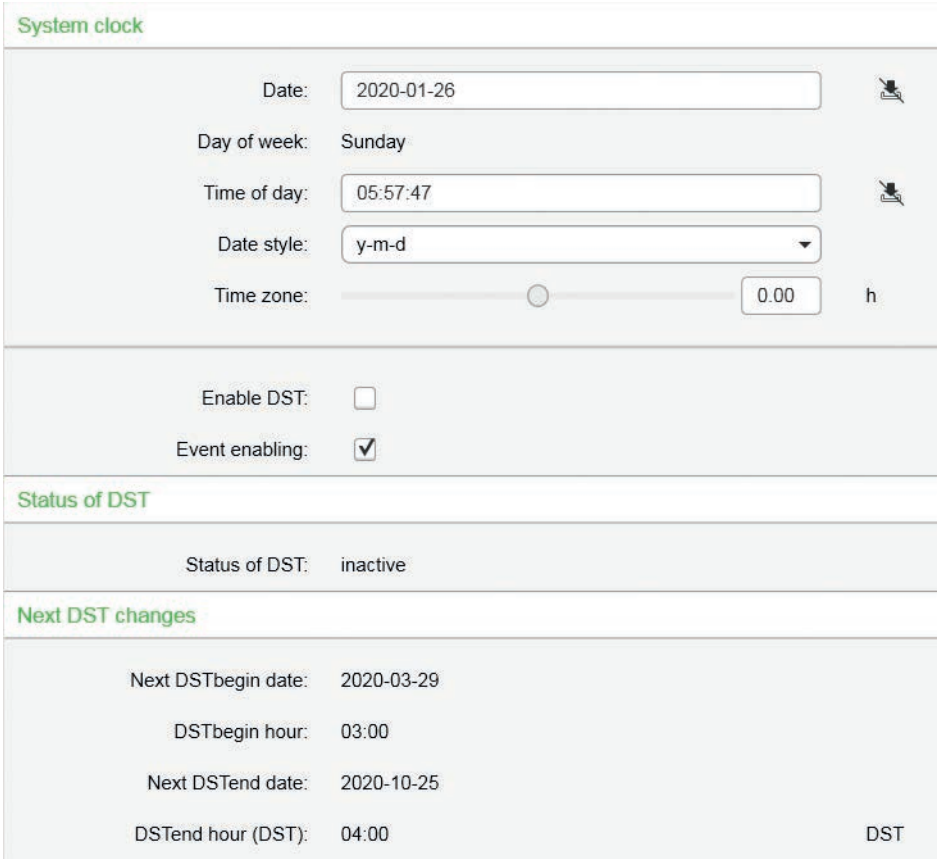

Daylight time standards vary widely throughout the world. Traditional daylight/summer time is configured as one (1) hour positive bias. The new US/Canada DST standard, adopted in the spring of 2007 is one (1) hour positive bias, starting at 2:00am on the second Sunday in March, and ending at 2:00am on the first Sunday in November. In the European Union, daylight change times are defined relative to the UTC time of day instead of local time of day (as in U.S.) European customers, carefully check the local country rules for DST.

The daylight saving rules are by default UTC +2:00 (24-hour clock):

- Daylight saving time start: Last Sunday of March at 03.00
- Daylight saving time end: Last Sunday of October at 04.00

Figure 144 - DST end and begin rules

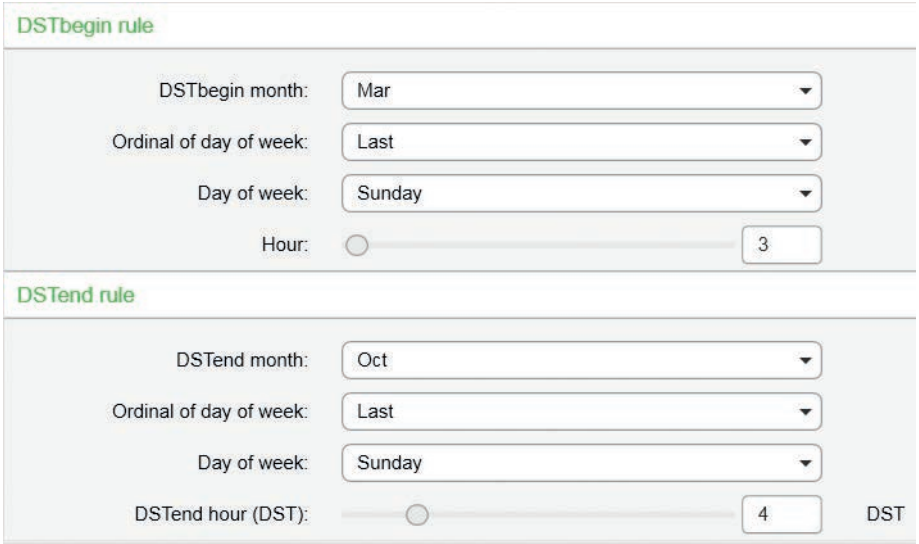

To ensure proper hands-free year-around operation, automatic daylight time adjustments must be configured using the “Enable DST” and not with the time zone offset option.

Adapting the auto-adjust function

During tens of hours of synchronizing, the relay learns its average deviation and starts to make small corrections by itself. The target is that when the next synchronizing message is received, the deviation is already near zero. Parameters "AAIntv" and "AvDrft" show the adapted correction time interval of this ±1 ms auto-adjust function.

Time drift correction without external sync

If any external synchronizing source is not available and the system clock has a known steady drift, it is possible to roughly correct the clock deviation by editing the parameters "AAIntv" and "AvDrft". The following equation can be used if the previous "AAIntv" value has been zero.

$$AAIntv = \frac{604.8}{DriftInOneWeek}$$

If the auto-adjust interval "AAIntv" has not been zero, but further trimming is still needed, the following equation can be used to calculate a new auto-adjust interval.

$$AAIntv_{NEW} = \frac{1}{\frac{1}{AAIntv_{PREVIOUS}} + \frac{DriftInOneWeek}{604.8}}$$

The term *DriftInOneWeek*/604.8 may be replaced with the relative drift multiplied by 1000 if some other period than one week has been used. For example, if the drift has been 37 seconds in 14 days, the relative drift is 37*1000/(14*24*3600) = 0.0306 ms/s.

Example 1

If there has been no external sync and the relay's clock is leading sixty-one seconds a week and the parameter AAIntv has been zero, the parameters are set as

$$AvDrft = Lead$$

$$AAIntv = \frac{604.8}{61} = 9.9s$$

With these parameter values, the system clock corrects itself with –1 ms every 9.9 seconds which equals –61.091 s/week.

Example 2

If there is no external sync and the relay's clock has been lagging five seconds in nine days and the AAIntv has been 9.9 s, leading, then the parameters are set as

$$AAIntv_{NEW} = \frac{1}{\frac{1}{9.9} - \frac{5000}{9 \cdot 24 \cdot 3600}} = 10.6$$

$$AvDrft = Lead$$

When the internal time is roughly correct – the deviation is less than four seconds – no synchronizing or auto-adjust turns the clock backwards. Instead, if the clock is leading, it is softly slowed down to maintain causality.

Table 111 - System clock parameters

Parameter	Value	Unit	Description	Note
Date			Current date	Set
Time			Current time	Set
Style			Date format	Set
	y-d-m		Year-Month-Day	
	d.m.y		Day.Month.Year	
	m/d/y		Month/Day/Year	
SyncDI	Possible values depends on the types of I/O cards		The digital input used for clock synchronization.	84)
	-		DI not used for synchronizing	
	DI1 – DI6		Minute pulse input	

Parameter	Value	Unit	Description	Note
TZone	-15.00 – +15.00 [85)]		UTC time zone for SNTP synchronization. Note: This is a decimal number. For example for state of Nepal the time zone 5:45 is given as 5.75	Set
DST	No; Yes		Daylight saving time for SNTP	Set
SySrc			Clock synchronization source	
	Internal		No sync recognized since 200s	
	DI		Digital input	
	SNTP		Protocol sync	
	SpaBus		Protocol sync	
	ModBus		Protocol sync	
	ModBus TCP		Protocol sync	
	ProfibusDP		Protocol sync	
	IEC101		Protocol sync	
	IEC103		Protocol sync	
	DNP3		Protocol sync	
			IRIG timecode B003[86)]	
MsgCnt	0 – 65535, 0 – etc.		The number of received synchronization messages or pulses	

Parameter	Value	Unit	Description	Note
Dev	±32767	ms	Latest time deviation between the system clock and the received synchronization	
SyOS	±10000.000	s	synchronization correction for any constant deviation in the synchronizing source	Set
AAIntv	±1000	s	Adapted auto-adjust interval for 1 ms correction	Set[87)]
AvDrft	Lead; Lag		Adapted average clock drift sign	Set [87)]
FilDev	±125	ms	Filtered synchronization deviation	

[84)] Set the DI delay to its minimum and the polarity such that the leading edge is the synchronizing edge.
[85)] A range of -11 h – +12 h would cover the whole earth but because the International Date Line does not follow the 180° meridian, a more wide range is needed.
[86)]
[87)] If external synchronization is used, this parameter is set automatically.

Set = An editable parameter (password needed).

Synchronization with DI

The clock can be synchronized by reading minute pulses from digital inputs, virtual inputs or virtual outputs. The sync source is selected with the **SyncDI** setting. When a rising edge is detected from the selected input, the system clock is adjusted to the nearest minute. The length of the digital input pulse should be at least 50 ms. The delay of the selected digital input should be set to zero.

Synchronization correction

If the sync source has a known offset delay, it can be compensated with the **SyOS** setting. This is useful for compensating hardware delays or transfer delays of communication protocols. A positive value compensates a lagging external sync and communication delays. A negative value compensates any leading offset of the external synch source.

Sync source

When the relay receives new sync message, the sync source display is updated. If no new sync messages are received within the next 1.5 minutes, the relay switches over to internal sync mode.

Sync source: IRIG-B

IRIG standard time formats B003 and B004 are supported with a dedicated communication option (See *12.2 Accessories*).

IRIG-B input clock signal voltage level is TLL. The input clock signal originated in the GPS receiver must be taken to multiple relays trough an IRIG-B distribution module. This module acts as a centralized unit for a point-to-multiple point connection.

NOTE: Daisy chain connection of IRIG-B signal inputs in multiple relays must be avoided.

Figure 145 - PowerLogic P3 relays with IRIG-B synchronization capability

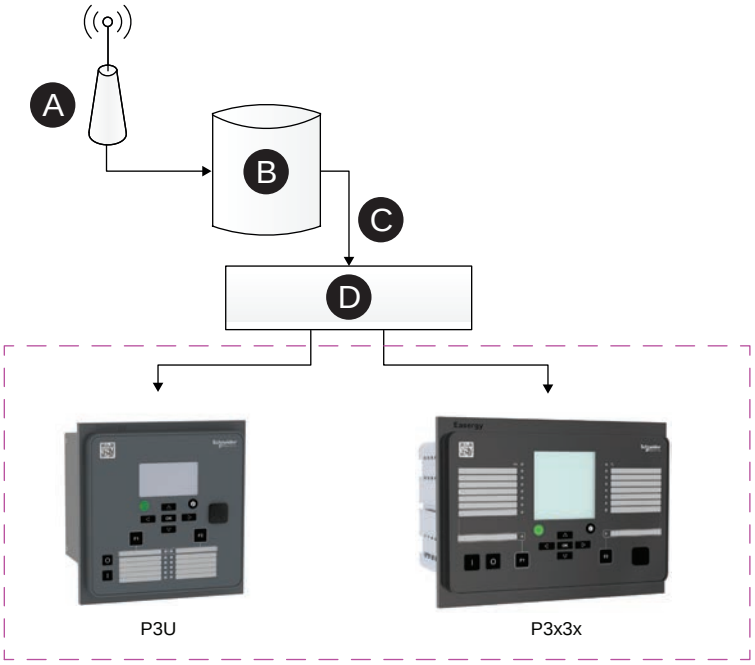

A. Antenna
B. GPS clock
C. IRIG-B signal from clock
D. IRIG-B distribution module

The recommended cable must be shielded and either of coaxial or twisted pair type. Its length must not exceed 10 meters.

Deviation

The time deviation means how much the system clock time differs from the sync source time. The time deviation is calculated after receiving a new sync message. The filtered deviation means how much the system clock was really adjusted. Filtering takes care of small deviation in sync messages.

Auto-lag/lead

The relay synchronizes to the sync source, meaning that it starts automatically leading or lagging to stay in perfect sync with the master. The learning process takes a few days.

6.5 Voltage sags and swells

Description

The power quality of electrical networks has become increasingly important. Sophisticated loads (for example computers) require an uninterruptible supply of “clean” electricity. The PowerLogic P3U20 and P3U30 protection platform provides many power quality functions that can be used to evaluate and monitor the quality and alarm on the basis of the quality. One of the most important power quality functions is voltage sag and swell monitoring.

PowerLogic P3U20 and P3U30 provides separate monitoring logs for sags and swells. The voltage log is triggered if any voltage input either goes under the sag limit (U<) or exceeds the swell limit (U>). There are four registers for both sags and swells in the fault log. Each register contains start time, phase information, duration and the minimum, average and maximum voltage values of each sag and swell event. Furthermore, it contains the total number of sags and swells counters as well as the total number of timers for sags and swells.

The voltage power quality functions are located under the submenu “U”.

Table 112 - Setting parameters of sags and swells monitoring

Parameter	Value	Unit	Default	Description
U>	20 – 150	%	110	Setting value of swell limit
U<	10 – 120	%	90	Setting value of sag limit
Delay	0.04 – 1.00	s	0.06	Delay for sag and swell detection
SagOn	On; Off	-	On	Sag on event
SagOff	On; Off	-	On	Sag off event
SwelOn	On; Off	-	On	Swell on event
SwelOf	On; Off	-	On	Swell off event

Table 113 - Recorded values of sags and swells monitoring

	Parameter	Value	Unit	Description
Recorded values	Count		-	Cumulative sag counter
	Total		-	Cumulative sag time counter
	Count		-	Cumulative swell counter
	Total		-	Cumulative swell time counter
Sag / swell logs 1 – 4	Date		-	Date of the sag/ swell
	Time		-	Time stamp of the sag/swell
	Type		-	Voltage inputs that had the sag/swell
	Time		s	Duration of the sag/swell
	Min1		% U_N	Minimum voltage value during the sag/ swell in the input 1
	Min2		% U_N	Minimum voltage value during the sag/ swell in the input 2
	Min3		% U_N	Minimum voltage value during the sag/ swell in the input 3
	Ave1		% U_N	Average voltage value during the sag/swell in the input 1

	Parameter	Value	Unit	Description
	Ave2		% U_N	Average voltage value during the sag/swell in the input 2
	Ave3		% U_N	Average voltage value during the sag/swell in the input 3
	Max1		% U_N	Maximum voltage value during the sag/ swell in the input 1
	Max2		% U_N	Maximum voltage value during the sag/ swell in the input 2
	Max3		% U_N	Maximum voltage value during the sag/ swell in the input 3

Characteristics

Table 114 - Voltage sag & swell

Voltage sag limit	10 –120% U_N (step 1%)
Voltage swell limit	20 –150% U_N (step 1%)
Definite time function: - Operate time	DT 0.08–1.00 s (step 0.02 s)
Low voltage blocking	0–50%
Reset time	< 60 ms
Reset ration: - Sag - Swell	 1.03 0.97

Block limit	0.5 V or 1.03 (3%)
Inaccuracy: - Activation - Activation (block limit) - Operate time at definite time function	 ±0.5 V or 3% of the set value ±5% of the set value ±1% or ±30 ms

If one of the line-to-line voltages is below sag limit and above block limit but another line-to-line voltage drops below block limit, blocking is disabled.

6.6 Voltage interruptions

Description

The relay includes a simple function to detect voltage interruptions. The function calculates the number of voltage interruptions and the total time of the voltage-off time within a given calendar period. The period is based on the relay's real-time clock. The available periods are:

- 8 hours, 00:00–08:00, 08:00–16:00, 16:00–24:00
- one day, 00:00–24:00
- one week, Monday 00:00 – Sunday 24:00
- one month, the first day 00:00 – the last day 24:00
- one year, 1st January 00:00 – 31st December 24:00

After each period, the number of interruptions and the total interruption time are stored as previous values. The interruption counter and the total time are cleared for a new period. Previous values are overwritten.

Voltage interruption is based on the value of the positive sequence voltage U_1 and a limit value you can define. Whenever the measured U_1 goes below the limit, the interruption counter is increased, and the total time counter starts increasing.

The shortest recognized interruption time is 40 ms. If the voltage-off time is shorter, it may be recognized depending on the relative depth of the voltage dip.

If the voltage has been significantly over the limit U_1< and then there is a small and short under-swing, it is not recognized (*Figure 146*).

Figure 146 - A short voltage interruption which is probably not recognized

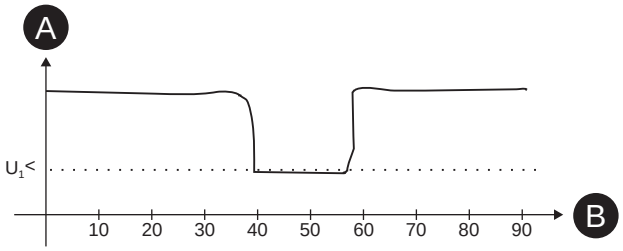

A.Voltage U_1 **B.** Time (ms)

On the other hand, if the limit U_1< is high and the voltage has been near this limit, and then there is a short but very deep dip, it is not recognized (*Figure 147*).

Figure 147 - A short voltage interrupt that will be recognized

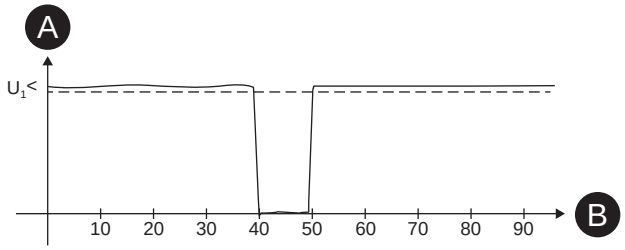

A.Voltage U_1 **B.** Time (ms)

Table 115 - Setting parameters of the voltage sag measurement function

Parameter	Value	Unit	Default	Description
U_1<	10.0–120.0	%	64	Setting value
Period	8h Day Week Month	-	Month	Length of the observation period
Date		-	-	Date
Time		-	-	Time

Table 116 - Measured and recorded values of voltage sag measurement function

	Parameter	Value	Unit	Description
Measured value	Voltage	LOW; OK	-	Current voltage status
	U_1		%	Measured positive sequence voltage

	Parameter	Value	Unit	Description
Recorded values	Count		-	Number of voltage sags during the current observation period
	Prev		-	Number of voltage sags during the previous observation period
	Total		s	Total (summed) time of voltage sags during the current observation period
	Prev		s	Total (summed) time of voltage sags during the previous observation period

Characteristics

Table 117 - Voltage interruptions

Voltage low limit (U_1)	10–120% U_N (step 1%)
Definite time function: - Operate time	DT < 60 ms (Fixed)
Reset time	< 60 ms
Reset ratio	1.03
Inaccuracy: - Activation	 3% of the set value

6.7 Current transformer supervision (ANSI 60)

ANSI 60	Feeder	Motor
P3U20	x	x
P3U30	x	x

Description

The relay supervises the current transformers (CTs) and the external wiring between the relay terminals and the CTs. This is a safety function as well, since an open secondary of a CT causes dangerous voltages.

The CT supervision function measures phase currents. If one of the three phase currents drops below the I_{MIN}< setting while another phase current exceeds the I_{MAX}> setting, the function issues an alarm after the operation delay has elapsed.

Table 118 - Setting parameters of CT supervision

Parameter	Value	Unit	Default	Description
Imax>	0.0 – 10.0	xIn	2.0	Upper setting for CT supervision current scaled to primary value, calculated by relay
Imin<	0.0 – 10.0	xIn	0.2	Lower setting for CT supervision current scaled to primary value, calculated by relay
t>	0.02 – 600.0	s	0.10	Operation delay
CT on	On; Off	-	On	CT supervision on event
CT off	On; Off	-	On	CT supervision off event

Table 119 - Measured and recorded values of CT

	Parameter	Value	Unit	Description
Measured value	ILmax		A	Maximum of phase currents
	ILmin		A	Minimum of phase currents
Display	Imax>, Imin<		A	Setting values as primary values
Recorded values	Date		-	Date of CT supervision alarm
	Time		-	Time of CT supervision alarm
	Imax		A	Maximum phase current
	Imin		A	Minimum phase current

Characteristics

Table 120 - Current transformer supervision

I_{MAX}> setting I_{MIN}< setting	0.00 – 10.00 x I_N (step 0.01) 0.00 – 10.00 x I_N (step 0.01)
Definite time function: - Operate time	DT 0.04 – 600.00 s (step 0.02 s)
Reset time Reset ratio I_{MAX}> Reset ratio I_{MIN}<	< 60 ms 0.97 1.03
Inaccuracy: - Activation - Operate time at definite time function	- ±3% of the set value ±1% or ±30 ms

6.8 Voltage transformer supervision (ANSI 60FL)

ANSI 60FL	Feeder	Motor
P3U20		
P3U30	x	x

Description

The relay supervises the voltage transformers (VTs) and VT wiring between the relay terminals and the VTs. If there is a fuse in the voltage transformer circuitry, the blown fuse prevents or distorts the voltage measurement. Therefore, an alarm should be issued. Furthermore, in some applications, protection functions using voltage signals should be blocked to avoid false tripping.

The VT supervision function measures three line-to-line voltages and currents. The negative sequence voltage U_2 and the negative sequence current I_2 are calculated. If U_2 exceed the U_2> setting and at the same time, I_2 is less than the I_2< setting, the function issues an alarm after the operation delay has elapsed.

The VT supervision based on negative sequence components is able to detect 1-phase and 2-phase fuse fault. To detect 3-phase fuse fault, positive sequence voltage and current are used together with the optional CB position.

When the CB position is selected, the supervision process monitors U_1 and I_1 and CB position. If CB is closed and I_1 exceed setting value and U_1 is lower than 1% of nominal voltage, VT fuse fail alarm is issued after operational delay has elapsed. When the CB position is not selected, the supervision process monitors only U_1 and I_1 value. If U_1 is lower than 1% of nominal voltage and I_1 exceeds setting value, VT fuse fail is issued after operational delay has elapsed.

Table 121 - Setting parameters of VT supervision

Parameter	Value	Unit	Default	Description
U2>	0.0 – 200.0	% Un	34.6	Upper setting for VT supervision
I2<	0.0 – 200.0	% In	100.0	Lower setting for VT supervision
t>	0.02 – 600.0	s	0.10	Operation delay
VT on	On; Off	-	On	VT supervision on event
VT off	On; Off	-	On	VT supervision off event

Parameter	Value	Unit	Default	Description
I1>	0~200	% In	100	Upper setting for I1 value
CB for monitoring	DI1~Obj8Op	-	-	CB object for monitoring

Table 122 - Measured and recorded values of VT supervision

	Parameter	Value	Unit	Description
Measured values	U2		$\%U_N$	Measured negative sequence voltage
	I2		$\%I_N$	Measured negative sequence current
	U1		%Un	Measured positive sequence voltage
	I1		%In	Measured positive sequence current
Recorded values	Date		-	Date of VT supervision alarm
	Time		-	Time of VT supervision alarm
	U2		$\%U_N$	Recorded negative sequence voltage
	I2		$\%I_N$	Recorded negative sequence current

	Parameter	Value	Unit	Description
	U1		%Un	Recorded positive sequence voltage
	I1		%In	Recorded positive sequence current

Characteristics

Table 123 - Voltage transformer supervision

U_2> setting I_2< setting I_1> setting	0.0 – 200.0% (step 0.1%) 0.0 – 200.0% (step 0.1%) 0.0-200.0%(step 0.1%)
Definite time function: - Operate time	DT 0.04 – 600.00 (step 0.02s)
Reset time	< 60 ms
Reset ratio	3% of the start value
Inaccuracy: - Activation U_2> - Activation I_2< - Activation I_1> - Operate time at definite time function	- ±1%-unit ±1%-unit ±1%-unit ±1% or ±30 ms

Figure 148 - Block diagram of 3-phase voltage transformer supervision

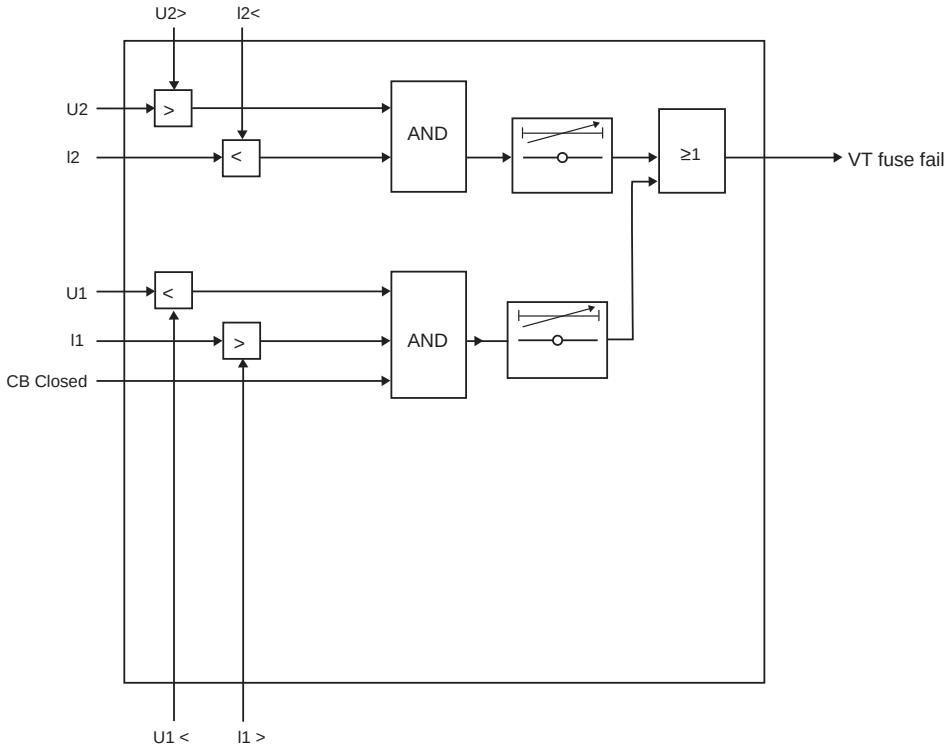

6.9 Circuit breaker wear

Description

Circuit breaker (CB) wear is a function that monitors CB wear by calculating how much wear the CB can sustain. It raises an alarm about the need for CB maintenance before the condition of the CB becomes critical.

This function records the peak symmetrical current[88)] from each phase[89)], and uses that magnitude as the breaking current for that phase to estimate the amount of wear on the CB. The function then calculates the estimated number of cycles or trips remaining before the CB needs to be replaced or serviced.

Permissible cycle diagram

The permissible cycle diagram is usually available in the documentation of the CB manufacturer. This diagram specifies the permissible number of cycles as a function of the breaking current, that is, how much wear occurs in the CB when it trips with a given breaking current. So the maximum number of cycles a CB can trip with this breaking current is used as the measure of wear.

The condition monitoring function must be configured according to this diagram. In the configuration, this diagram is called **Breaker curve**.

88) The used peak current is the magnitude of the fundamental frequency component. This magnitude does not include a possible DC component.

89) The current is sampled every 10 milliseconds, starting from the moment the monitored trip relay is asserted and ending when the current of every phase has decreased below one quarter of the phase's breaking current or after 500 milliseconds have elapsed, whichever happens first.

Figure 149 - Example permissible cycle diagram

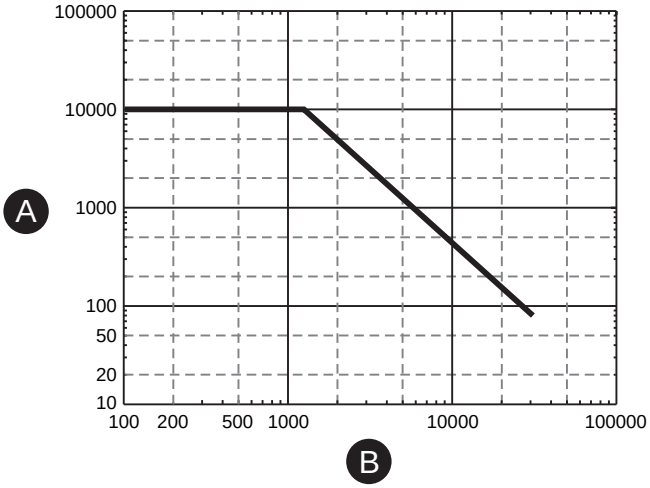

A. Number of permitted operations B. Breaking current (A)

Up to eight points can be selected from the diagram and entered to the device. Each point specifies a breaking current and the associated maximum number of permitted operations. The device assumes there is a straight line between each two consecutive points in the log-log diagram (that is, uses logarithmic interpolation between the points), and thus forms an approximation of the permissible cycle diagram. It should be possible to accurately describe most permissible cycle diagrams in this way.

The values in the example match the diagram in *Figure 149*.

Table 124 - An example of circuit breaker wear characteristics

Point	Interrupted current (kA)	Number of permitted operations
1	0 (mechanical age)	10000
2	1.25 (rated current)	10000
3	31.0 (maximum breaking current)	80
4	100	1
5	100	1
6	100	1
7	100	1
8	100	1

Alarm points

Two alarm points can be configured to notify about the approaching need for CB maintenance.

The number of permissible CB cycles depends on the breaking current that is interrupted by the CB. Larger currents lead to greater wear on the CB and thus to fewer operating cycles.[90)]

An alarm point specifies a breaking current and an associated number of permissible cycles. An alarm is raised if the remaining number of permissible cycles at the given breaking current falls below this limit.

The table in the **Operations left** setting view shows the number of operation cycles left before the alarm points are reached. The number of remaining cycles is tracked for each phase separately, and the alarm is raised when any phase runs out of cycles.

Figure 150 - Operations left

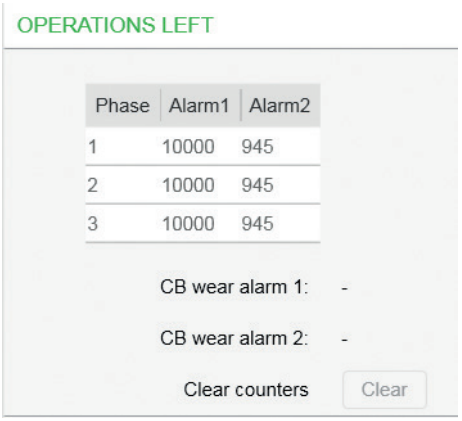

The first alarm point can be set, for example, to the CB's nominal current and the second alarm point to a typical fault current.

When an alarm is raised, a signal is asserted in the output matrix. Also, an event is created depending on the settings given in the **Event enabling** setting view.

Logarithmic interpolation

The permitted number of operations for the currents between the defined points is logarithmically interpolated:

Equation 30

$$C = \frac{a}{I^n}$$

C = permitted operations

I = interrupted current

a = constant according to *Equation 31*

n = constant according to *Equation 32*

Equation 31

$$a = C_k I_k^2$$

90) Each cycle causes mechanical wear on the CB. In addition, large enough currents create arcs inside the CB, which causes erosion of the electrical contacts for each phase. The larger the current, the greater the erosion, and thus the greater the wear on the CB. A worn CB has fewer cycles left at any breaking current.

Equation 32

$$n = \frac{\ln \frac{C_k}{C_{k+1}}}{\ln \frac{I_{k+1}}{I_k}}$$

ln = natural logarithm function

C_k, C_{k+1} = permitted operations

k = rows 2–7 in *Table 124*

I_k, I_{k+1} = corresponding current

k = rows 2–7 in *Table 124*

Example of the logarithmic interpolation

Alarm 2 current is set to 6 kA. The maximum number of operations is calculated as follows.

The current 6 kA lies between points 2 and 3 in the table. That gives value for the index k. Using

k = 2

C_k = 10000

C_{k+1} = 80

I_{k+1} = 31 kA

I_k = 1.25 kA

and *Equation 32* and *Equation 31*, the device calculates

Equation 33

$$n = \frac{\ln \frac{10000}{80}}{\ln \frac{31000}{1250}} = 1.5038$$

Equation 34

$$a = 10000 \cdot 1250^{1.5038} = 454 \cdot 10^6$$

Using *Equation 30*, the device gets the number of permitted operations for current 6 kA.

Equation 35

$$C = \frac{454 \cdot 10^6}{6000^{1.5038}} = 945$$

Thus, the maximum number of current-breaking operations at 6 kA is 945. This can be verified with the original CB curve in *Figure 149*. The figure shows that at 6 kA, the operation count is between 900 and 1000. In this case, a useful alarm level for the operations left is 50, for example, which is about 5 percent of the maximum.

Example of operation counter decrementing when the CB breaks a current

Alarm 2 is set to 6 kA. The CB failure protection supervises trip relay T1, and a trip signal of an overcurrent stage detecting a two-phase fault is connected to this trip relay T1. The interrupted phase currents are 12.5 kA, 12.5 kA and 1.5 kA. By what number are Alarm2 counters decremented?

Using *Equation 30* and values n and a from the previous example, the device gets the number of permitted operations at 10 kA.

Equation 36

$$C_{10kA} = \frac{454 \cdot 10^6}{12500^{1.5038}} = 313$$

At alarm level 2, 6 kA, the corresponding number of operations is calculated according to:

Equation 37

$$\Delta = \frac{C_{AlarmMax}}{C}$$

$$\Delta_A = \Delta_B = \frac{945}{313} = 3$$

Thus, Alarm2 counters for phases L1 and L2 are decremented by 3. In phase L1, the current is less than the alarm limit current 6 kA. For such currents, the decrement is 1.

$\Delta_{L3} = 1$

Table 125 - Local panel parameters of the CBWEAR function

Parameter	Value	Unit	Description	Set[91)]
CBWEAR STATUS				
AI1L1 AI1L2 AI1L3 AI2L1 AI2L2 AI2L3			Operations left for - Alarm 1, phase L1 - Alarm 1, phase L2 - Alarm 1, phase L3 - Alarm 2, phase L1 - Alarm 2, phase L2 - Alarm 2, phase L3	
Latest trip				
Date time			Time stamp of the latest trip operation	
IL1 IL2 IL3		A A A	Broken current of phase L1 Broken current of phase L2 Broken current of phase L3	
CBWEAR SET				
Alarm1				
Current	0.00–100.00	kA	Alarm1 current level	Set
Cycles	100000–1		Alarm1 limit for operations left	Set
Alarm2				
Current	0.00–100.00	kA	Alarm2 current level	Set
Cycles	100000–1		Alarm2 limit for operations left	Set
CBWEAR SET2				

Parameter	Value	Unit	Description	Set[91)]
AI1On	On; Off		'Alarm1 on' event enabling	Set
AI1Off	On; Off		'Alarm1 off' event enabling	Set
AI2On	On; Off		'Alarm2 on' event enabling	Set
AI2Off	On; Off		'Alarm2 off' event enabling	Set
Clear	-; Clear		Clearing of cycle counters	Set

[91)] Set = An editable parameter (password needed)

6.10 Circuit breaker condition monitoring

Description

Circuit breaker (CB) condition monitoring monitors the CB wear with the help of the cumulative breaking current. It raises an alarm about the need for CB maintenance before the CB's condition becomes critical. This function has two stages.

The approach to calculating the CB condition is different from the approach used by the CB wear function described in *6.9 Circuit breaker wear*. CB condition monitoring also provides some additional features for integrating the device with other Schneider Electric products. These functions are based on data analytics for integration into EcoStruxure Asset Advisor cloud-based offers.

Cumulative breaking current

CB monitoring is activated when the monitored CB opens, and the breaking current is added to the cumulative breaking current. This sum is calculated for each phase separately. This way of estimating the wear on the CB is opposite to the permissible cycles diagram used by the CB wear function. The permissible cycles diagram describes how much more wear the CB can sustain, and this approach describes how much wear the CB has accumulated.

To approximate the shape of the permissible cycles diagram, the cumulative breaking current is also calculated for 5 different bins, so that each bin tracks breaking currents within a given range (see *Figure 151*). If a phase's breaking current is within the range of a given bin, this current is added to the phase's cumulative breaking current on that bin.

Each bin also has three counters (one for each phase). Each counter tracks the number of times the CB has opened and something was added to the corresponding sum on that bin (see *Figure 151*).

Figure 151 - Cumulative breaking current

CUMULATIVE BREAKING CURRENT

Low limit	High limit	Sum ph A	Sum ph B	Sum ph C	Cnt ph A	Cnt ph B	Cnt ph C
0.0 kA	2.0 kA	0.00 kA2	0.00 kA2	0.00 kA2	0	0	0
2.0 kA	5.0 kA	0.00 kA2	0.00 kA2	0.00 kA2	0	0	0
5.0 kA	10.0 kA	0.00 kA2	0.00 kA2	0.00 kA2	0	0	0
10.0 kA	40.0 kA	0.00 kA2	0.00 kA2	0.00 kA2	0	0	0
40.0 kA		0.00 kA2	0.00 kA2	0.00 kA2	0	0	0

Cumul. breaking current ph A: 0.00 kA2

Cumul. breaking current ph B: 0.00 kA2

Cumul. breaking current ph C: 0.00 kA2

If all cumulative breaking currents for the bins are zero when the value of the CT primary parameter is changed in the **Scaling** setting view, the breaking current ranges for the bins are automatically set to their default values relative to the new CT primary value. The lower limit for the first bin is set to zero and the upper limit to two times the CT primary value. There is no upper limit for the fifth bin.

The cumulative breaking currents are tracked with greater precision than what is visible on the setting tool, that is, there are hidden decimals stored for each sum. A non-zero sum that is too small to be visible in the setting tool may prevent the bin ranges from getting their default values when the CT primary value is changed.

Each breaking current can be added to one bin.

The cumulative breaking currents can be read over the Modbus protocol as floating-point values (IEEE 754, binary32). These values are represented in two consecutive holding registers, so that the register in the lower address contains the MSB 16 bits. To change the sum by writing a floating-point value, the MSB 16 bits must be written first.

The cumulative breaking currents can be cleared by writing value zero to them.

Counters for mechanical operations

This function includes a counter that tracks the number of times the monitored CB is opened, and a second counter that tracks how many of those operations were caused by a protection stage trip. This requires that one of the controllable objects (see *4.6 Controllable objects*) has been configured to represent the CB and this object has been selected in the **Monitored object** parameter.

Internally, each object has its own open counter and the counter for the monitored object is shown under **Opening counts**, **Trip counts** and **Rack-out counter** (see *Figure 152*). These open counters are incremented even when this function has been disabled. In contrast, the trip counter is incremented when the monitored object is opened by a protection stage trip and this function is enabled. Thus, if you change the monitored object, the open counter value switches to the counter of the new object, but the trip counter continues from its current value. Both counters' values can be changed.

Figure 152 - Counters for mechanical operations

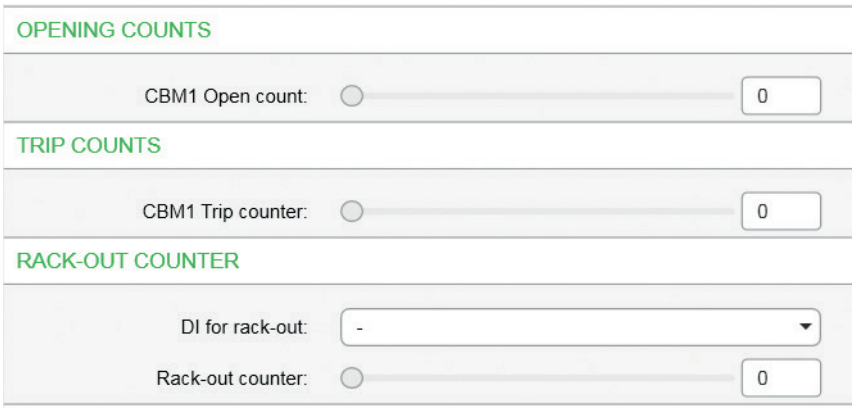

The number of times the monitored CB is racked out from the bay is tracked by its own counter. This requires that a digital input is set up to indicate when the CB is racked out[92]. This digital input is selected under **Rack-out counter**. Each digital input has its own counter. The same counter is also found in the **Digital inputs** setting view.

Operate times logs

This function records the completion times for the eight previous open, close, and charge operations of the monitored CB. Each operate time is recorded with a timestamp indicating when the operation was completed. This function also keeps a cumulative moving average of 20 previous operate times for each of the three categories.

There are two methods to monitor the CB open/close time. The default selection is **CB DI chg** which calculates the delta time of close and open statuses from the auxiliary contacts and measures the time it takes the main contacts to open/close.

Figure 153 - Selecting the method to monitor CB open/close time

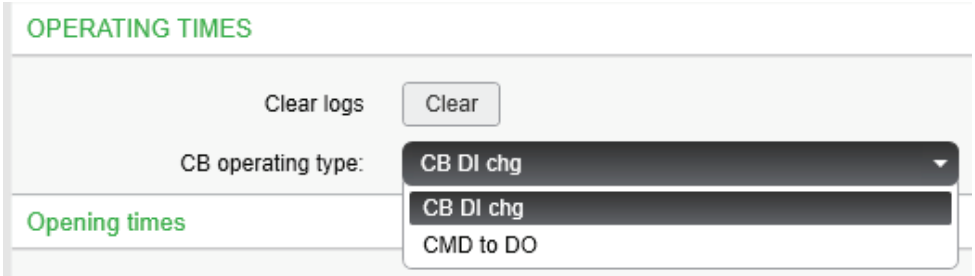

The alternative method, **CMD to DO**, measures the time from the request to operate to the auxiliary contact feedback. This method measures the complete time it takes from a stationary breaker to the auxiliary contacts changing state. You should select which relay is used to monitor the CB open and which relay is used to monitor the CB close. The calculation starts from the output control to DI status change. Normally, the operating time should be within the max time. If it exceeds the max time, it will reset automatically, and no new item will be updated in the log.

92) When the CB r is in the bay, this digital input has logical value *false*, and when the CB is racked out, this input has logical value *true*.

Figure 154 - Defining which relays monitor CB open and close

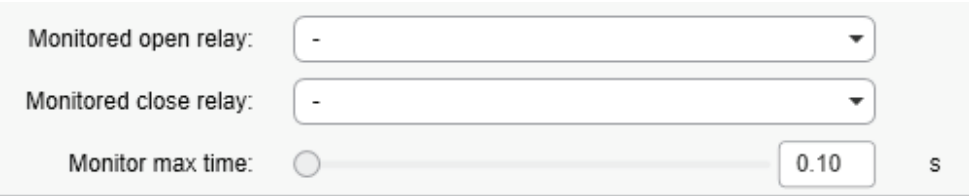

The completion times are recorded even if this function has been disabled, provided that the monitored object has been selected.

All three logs of completion times can be cleared by the **Clear logs** command.

Figure 155 - CB opening times

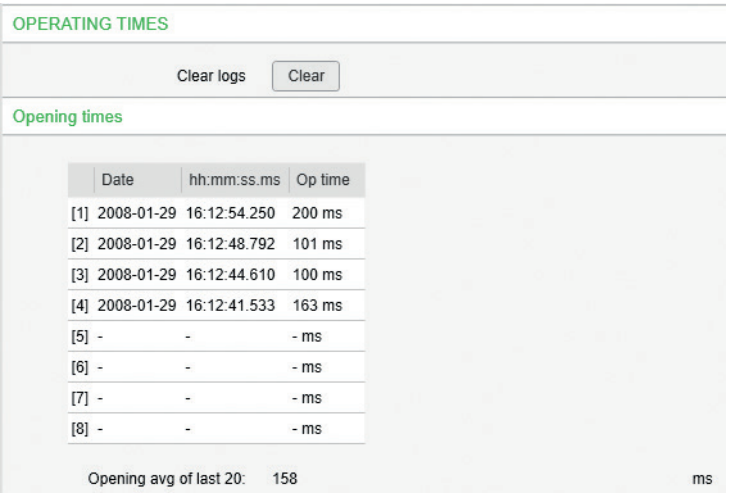

The charging times are recorded in seconds whereas the opening and closing times are recorded in milliseconds.

The operate times can be read over the Modbus protocol as floating-point values (IEEE 754, binary32), so that a range of holding registers is used to represent all operate times of a given category, from the newest to oldest. Each operate time is represented in two consecutive holding registers, so that the register in the lower address contains the MSB 16 bits.

Empty or unused cells in the log give value zero.

If an opening time or a closing time is greater than 300 milliseconds, this value is given as NaN (not-a-number) when it is read as a floating-point value. Similarly, charging times greater than 60 seconds are given as NaN.

6.11 Energy pulse outputs

Description

The relay can be configured to send a pulse whenever a certain amount of energy has been imported or exported. The principle is presented in *Figure 156*. Each time the energy level reaches the pulse size, a digital output is activated and the relay is active as long as defined by a pulse duration setting.

Figure 156 - Principle of energy pulses

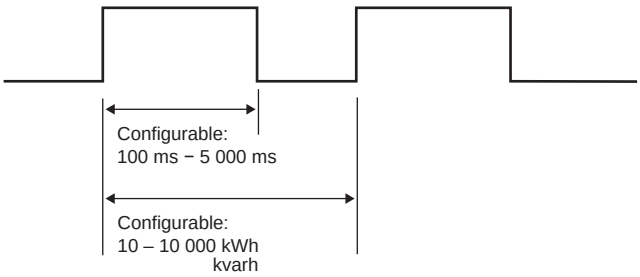

The relay has four energy pulse outputs. The output channels are:

- active exported energy
- reactive exported energy
- active imported energy
- reactive imported energy

Each channel can be connected to any combination of the digital outputs using the output matrix. The parameters for the energy pulses can be found in the ENERGY menu "E" under the submenus E-PULSE SIZES and E-PULSE DURATION.

Table 126 - Energy pulse output parameters

	Parameter	Value	Unit	Description
E-PULSE SIZES	E+	10 – 10 000	kWh	Pulse size of active exported energy
	Eq+	10 – 10 000	kvarh	Pulse size of reactive exported energy
	E-	10 – 10 000	kWh	Pulse size of active imported energy
	Eq-	10 – 10 000	kvarh	Pulse size of reactive imported energy

	Parameter	Value	Unit	Description
E-PULSE DURATION	E+	100 – 5000	ms	Pulse length of active exported energy
	Eq+	100 – 5000	ms	Pulse length of reactive exported energy
	E-	100 – 5000	ms	Pulse length of active imported energy
	Eq-	100 – 5000	ms	Pulse length of reactive imported energy

Scaling examples

1. The average active exported power is 250 MW.

   The peak active exported power is 400 MW.

   The pulse size is 250 kWh.

   The average pulse frequency is 250/0.250 = 1000 pulses/h.

   The peak pulse frequency is 400/0.250 = 1600 pulses/h.

   Set pulse length to 3600/1600 - 0.2 = 2.0 s or less.

   The lifetime of the mechanical digital output is $50x10^6$/1000 h = 6 a.

   This is not a practical scaling example unless a digital output lifetime of about six years is accepted.

2. The average active exported power is 100 MW.

   The peak active exported power is 800 MW.

   The pulse size is 400 kWh.

   The average pulse frequency is 100/0.400 = 250 pulses/h.

   The peak pulse frequency is 800/0.400 = 2000 pulses/h.

   Set pulse length to 3600/2000 - 0.2 = 1.6 s or less.

   The lifetime of the mechanical digital output is $50x10^6$/250 h = 23 a.

3. Average active exported power is 20 MW.

   Peak active exported power is 70 MW.

   Pulse size is 60 kWh.

   The average pulse frequency is 25/0.060 = 416.7 pulses/h.

   The peak pulse frequency is 70/0.060 = 1166.7 pulses/h.

   Set pulse length to 3600/1167 - 0.2 = 2.8 s or less.

   The lifetime of the mechanical digital output is $50x10^6$/417 h = 14 a.

4. Average active exported power is 1900 kW.

Peak active exported power is 50 MW.

Pulse size is 10 kWh.

The average pulse frequency is 1900/10 = 190 pulses/h.

The peak pulse frequency is 50000/10 = 5000 pulses/h.

Set pulse length to 3600/5000 - 0.2 = 0.5 s or less.

The lifetime of the mechanical digital output is $50x10^6$/190 h = 30 a.

Figure 157 - Application example of wiring the energy pulse outputs to a PLC having common plus and using an external wetting voltage

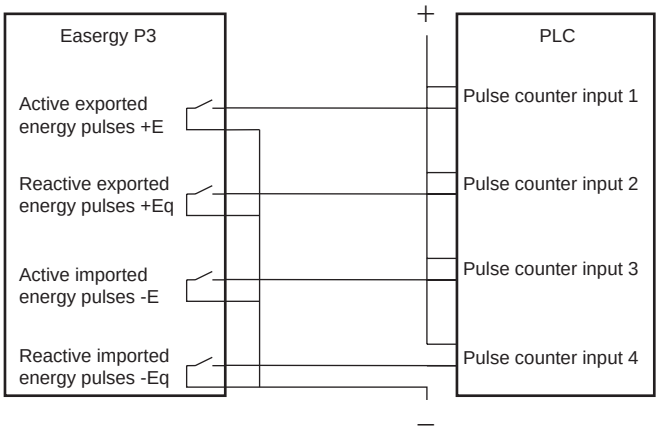

Figure 158 - Application example of wiring the energy pulse outputs to a PLC having common minus and using an external wetting voltage

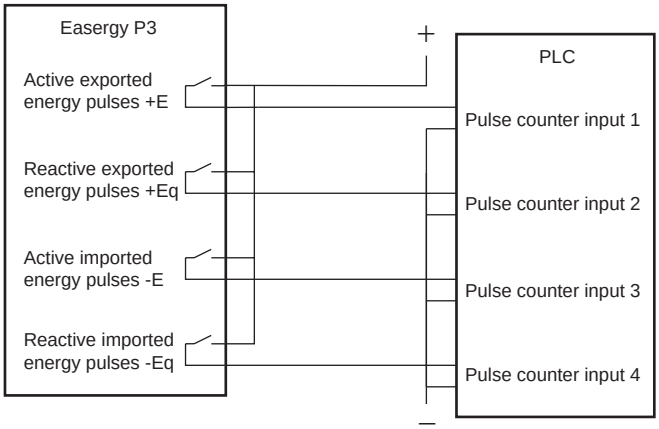

Figure 159 - Application example of wiring the energy pulse outputs to a PLC having common minus and an internal wetting voltage.

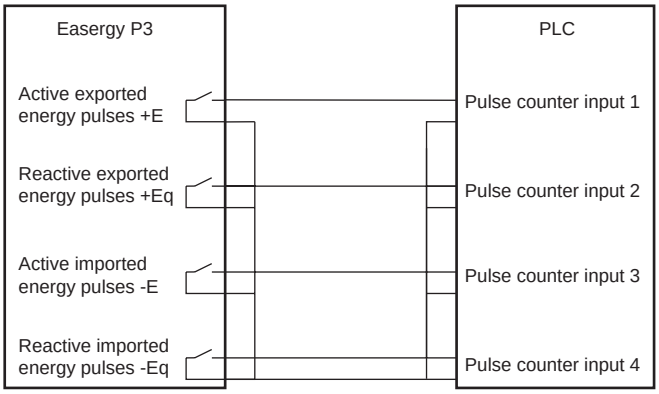

6.12 Active and reactive energy

The PowerLogic P3 protection device measures the following active and reactive energy values, calculated based on the first three voltages and phase currents I_{L1}, I_{L2}, and I_{L3} measured according to the related current flow for an outgoing feeder:

- E+: the accumulated active energy exported
- E-: the accumulated active energy imported
- Eq+: the accumulated reactive energy exported
- Eq-: the accumulated reactive energy imported

The measurement is based on fundamental values or RMS values. You can choose it with the **Energy calculation mode** setting in eSetup Easergy Pro.

Energy sign conversion

Independently of the power direction setting, the energy counter has an additional setting for sign conversion. Use the **Energy sign convention** setting to define positive and negative direction for export and import energy.

- The selection “Export – Positive power” results in positive power to accumulate the export energy counter, while negative power accumulates the import energy counter. Similarly, positive reactive power accumulates the exported reactive energy counter, while negative reactive accumulates the imported reactive power counter.
- The selection “Export – Negative power” results in negative power to accumulate the export energy counter, while positive power accumulates the import energy counter. Similarly, negative power accumulates the exported reactive power counter, while positive reactive power accumulates the imported reactive power counter.

Energy counter values available via communication protocols are impacted according to selection.

Changing the energy sign conversion must reset the energy counter.

When the apparent energy counter reaches 1 TVAh, the active and reactive energy counters reset to zero. To monitor the energy consumption on a feeder, a

dedicated energy counter can be set up over a defined time window of between 10 minutes and 24 hours.

Table 127 - Energy calculation settings

Parameter	Description
Energy calculation mode	**Fundamental:** base frequency used for energy calculation only **RMS:** Base frequency and harmonics are incorporated in the energy calculation
Energy sign convention	**Export – positive power:** positive power to accumulate the export energy counter and negative power to accumulate the import energy counter **Export – negative power:** negative power to accumulate the export energy counter and positive power to accumulate the import energy counter

6.13 Running hour counter

Description

The running hour counter is typically used to monitor the service time of the motor or appropriate feeder. This function calculates the total active time of the selected digital input, virtual I/O function button, GOOSE signal, POC signal or output matrix output signal. The resolution is ten seconds and the data is stored in the non-volatile memory.

Parameters

Table 128 - Running hour counter parameters

Parameter	Value	Unit	Description	Note
Runh	0...876000	h	Total active time, hours Note: The label text "Runh" can be edited with eSetup Easergy Pro.	(Set)[93)]
Runs	0...3599	s	Total active time, seconds	(Set)
Starts	0...65535		Activation counter	(Set)
Status	Stop Run		Current status of the selected digital signal	

Parameter	Value	Unit	Description	Note
DI	- - DI1 – DIn, VI1 – VIn, LedA, LedB, LedC, LedD, LedE, LedF, LedG, LedDR, VO1 – VO6		Select the supervised signal None Physical inputs Virtual inputs Output matrix out signal LA Output matrix out signal LB Output matrix out signal LC Output matrix out signal LD Output matrix out signal LE Output matrix out signal LF Output matrix out signal LG Output matrix out signal DR Virtual outputs	Set[94)]
Started at			Date and time of the last activation	
Stopped at			Date and time of the last inactivation	

[93)] (Set) = An informative value which can be edited as well.
[94)] Set = An editable parameter (password needed).

6.14 Timers

Description

The PowerLogic P3 protection platform includes four settable timers that can be used together with the user's programmable logic or to control setting groups and other applications that require actions based on calendar time. Each timer has its own settings. The selected on-time and off-time is set, after which the activation of the timer can be set to be as daily or according to the day of the week (See the setting parameters for details). The timer outputs are available for logic functions and for the block and output matrix.

Figure 160 - Timer output sequence in different modes

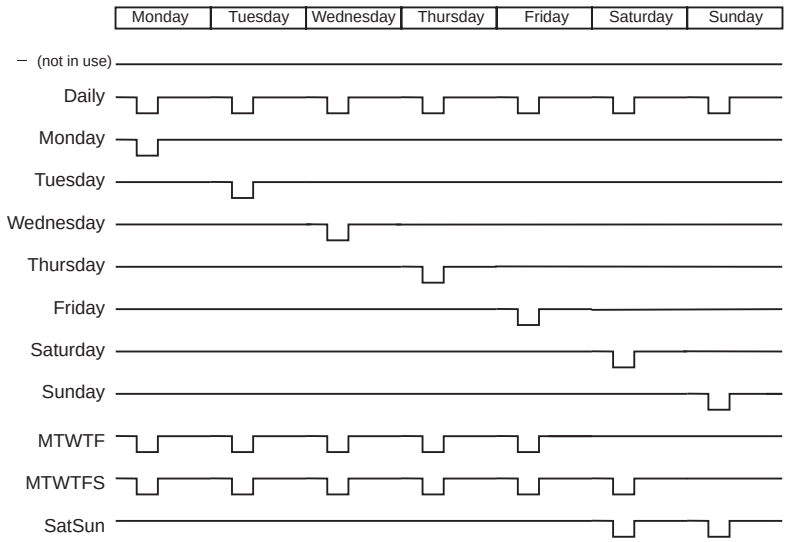

You can force any timer, which is in use, on or off. The forcing is done by writing a new status value. No forcing flag is needed as in forcing for example the digital outputs.

The forced time is valid until the next forcing or until the next reversing timed act from the timer itself.

The status of each timer is stored in the non-volatile memory when the auxiliary power is switched off. At startup, the status of each timer is recovered.

Table 129 - Setting parameters of timers

Parameter	Value	Description
TimerN	-	Timer status
	-	Not in use
	0	Output is inactive
	1	Output is active
On	hh:mm:ss	Activation time of the timer
Off	hh:mm:ss	De-activation time of the timer
Mode		For each four timers there are 12 different modes available:
	-	The timer is off and not running. The output is off i.e. 0 all the time.
	Daily	The timer switches on and off once every day.
	Monday	The timer switches on and off every Monday.

Parameter	Value	Description
	Tuesday	The timer switches on and off every Tuesday.
	Wednesday	The timer switches on and off every Wednesday.
	Thursday	The timer switches on and off every Thursday.
	Friday	The timer switches on and off every Friday.
	Saturday	The timer switches on and off every Saturday.
	Sunday	The timer switches on and off every Sunday.
	MTWTF	The timer switches on and off every day except Saturdays and Sundays
	MTWTFS	The timer switches on and off every day except Sundays.
	SatSun	The timer switches on and off every Saturday and Sunday.

6.15 Combined overcurrent status

Description

This function collects faults, fault types and registered fault currents of all enabled overcurrent stages and shows them in the event log.

Table 130 - Line fault parameters

Parameter	Value	Unit	Description	Note
IFltLas		x_{IN} or x_{IMOT}	Current of the latest overcurrent fault	(Set)
LINE ALARM				

Parameter	Value	Unit	Description	Note
AlrL1 AlrL2 AlrL3	0 1		Start (=alarm) status for each phase. 0 = No start since alarm ClrDly 1 = Start is on	
OCs	0 1		Combined overcurrent start status. AlrL1 = AlrL2 = AlrL3 = 0 AlrL1 = 1 or AlrL2 = 1 or AlrL3 = 1	
LxAlarm	- On / Off		'On' Event enabling for AlrL1 – 3 Events are enabled / Events are disabled	Set[95)]
LxAlarmOff	- On / Off		'Off' Event enabling for AlrL1...3 Events are enabled / Events are disabled	Set
OCAlarm	- On / Off		'On' Event enabling for combined o/c starts Events are enabled / Events are disabled	Set

Parameter	Value	Unit	Description	Note
OCAlarmOff	- On / Off		'Off' Event enabling for combined o/c starts Events are enabled / Events are disabled	Set
IncFltEvnt	- On Off		Disabling several start and trip events of the same fault Several events are enabled[96)] Several events of an increasing fault is disabled [97)]	Set
ClrDly	0 – 65535	s	Duration for active alarm status AlrL1, Alr2, AlrL3 and OCs	Set
LINE FAULT				
FltL1 FltL2 FltL3	- 0 1		Fault (=trip) status for each phase. 0 = No fault since fault ClrDly 1 = Fault is on	
OCt	- 0 1		Combined overcurrent trip status. FltL1 = FltL2 = FltL3 = 0 FltL1 = 1 or FltL2 = 1 or FltL3 = 1	

Parameter	Value	Unit	Description	Note
LxTrip	- On / Off		'On' Event enabling for FltL1 – 3 Events are enabled / Events are disabled	Set
LxTripOff	- On / Off		'Off' Event enabling for FltL1...3 Events are enabled / Events are disabled	Set
OCTrip	- On / Off		'On' Event enabling for combined o/c trips Events are enabled / Events are disabled	Set
OCTripOff	- On / Off		'Off' Event enabling for combined o/c starts Events are enabled / Events are disabled	Set

Parameter	Value	Unit	Description	Note
IncFltEvnt	- On Off		Disabling several events of the same fault Several events are enabled[96)] Several events of an increasing fault is disabled[97)]	Set
ClrDly	0 – 65535	s	Duration for active alarm status FltL1, Flt2, FltL3 and OCt	Set

[95)] Set = An editable parameter (password needed).
[96)] Used with IEC 60870-105-103 communication protocol. The alarm screen shows the latest fault current if it is the biggest registered fault current, too. Not used with Spabus because Spabus masters usually do not like to have unpaired On/Off events.
[97)] Used with SPA-bus protocol because most SPA-bus masters need an off-event for each corresponding on-event.

6.16 Incomer short-circuit fault locator

Description

The relay includes a stand-alone fault locator algorithm. The algorithm can locate a short circuit in radially operated networks if the relay located in the incoming feeder is connected CT & VT polarity-wise for forward (positive) power direction. If the incoming feeder's power flow direction is configured negative, the short-circuit fault locator function does not work.

The fault location is given as in reactance (ohms) and kilometres or miles. The fault value can then be exported, for example, with an event to a Distribution Management System (DMS). The system can then localize the fault. If a DMS is not available, the distance to the fault is displayed as kilometres, and as a reactance value. However, the distance value is valid only if the line reactance is set correctly. Furthermore, the line should be homogenous, that is, the wire type of the line should be the same for the whole length. If there are several wire types on the same line, an average line reactance value can be used to get an approximate distance value to the fault. Names and reactance values for widely used overhead wires are:

- Sparrow: 0.408 ohms/km or 0.656 ohms/mile
- Raven: 0.378 ohms/km or 0.608 ohms/mile

The fault locator is normally used in the incoming bay of the substation. Therefore, the fault location is obtained for the whole network with just one relay.

Fault locator reset time

Fault locator reset time provides a selection to clear the relevant fault values. When user sets the reset time, the fault value will be cleared after the given time.

When the setting is set to zero, the fault value is not cleared. It remains until the next fault occurs.

For incomer feeder, the “Blocked before next trig” setting will block the reset time feature. When “Blocked before next trig” is set and a new fault occurs, the block timer will start. This will block the reset timer until the block timer is released.

For example, if the reset time setting is 1 minute, “Blocked before next trig” setting is 70 s, and calculating time is 30 s, the users will see 100 s for the reset timer instead of 60 s. The equation is as follows: 100 s = 60 s + 70 s - 30 s.

Figure 161 - Reset timer example

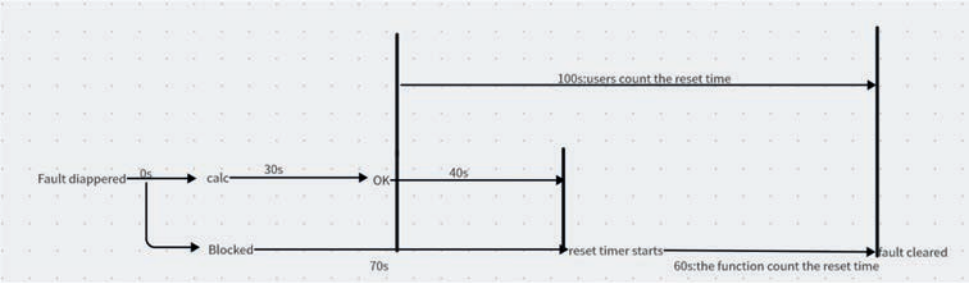

The algorithm functions in the following order:

1. The needed measurements (phase currents and voltages) are continuously available.
2. The fault distance calculation can be triggered in two ways: by opening a feeder circuit breaker due to a fault and sudden increase in phase currents (Enable Xfault calc1 + Triggering digital input). Another option is to use only the sudden increase in the phase currents (Enable Xfault calc1).
3. Phase currents and voltages are registered in three stages: before the fault, during the fault and after the faulty feeder circuit breaker was opened.
4. The fault distance quantities are calculated.
5. Two phases with the biggest fault current are selected.
6. The load currents are compensated.
7. The faulty line length reactance is calculated.

Table 131 - Setting parameters of the incomer short-circuit fault locator

Parameter	Value	Unit	Default	Description
Triggering digital input	-; DI1–DI18 DI1 – DI16 VI1–VI4 VO1–VO6 NI1–NI64 POC1–POC16	-	-	Trigger mode (- = triggering based on sudden increase of phase current, otherwise sudden increase of phase current + DIx/VIx)
Line reactance	0.010–10.000	Ohms/km	0.389	Line reactance of the line. This is used only to convert the fault reactance to kilometers.
dItrig	10–800	$\%I_N$	50	Trig current (sudden increase of phase current)
Blocked before next trig	10–600	s	70	Blocks function for this time after trigger. This is used for blocking calculation in autoreclose.
Xmax limit	0.5–500.0	Ohm	11.0	Limit for maximum reactance. If the reactance value is above the set limit, the calculation result is not shown.

Parameter	Value	Unit	Default	Description
Event	Disabled; Enabled	-	Enabled	Event mask
Time to reset	0–60	minutes	0	Time setting to reset relevant fault values, including “fault type”, “fault reactance”, “distance to fault” and ”voltage drop”.

Table 132 - Measured and recorded values of the incomer short circuit fault locator

	Parameter	Value	Unit	Description
Measured values/ recorded values	Distance		km	Distance to the fault
	Xfault		ohm	Fault reactance
	Date		-	Fault date
	Time		-	Fault time
	Time		ms	Fault time
	Cntr		-	Number of faults
	Pre		A	Pre-fault current (=load current)
	Fault		A	Current during the fault
	Post		A	Post-fault current
	Udrop		% Un	Voltage dip during the fault
	Durati		s	Fault duration

	Parameter	Value	Unit	Description
	Type		-	Fault type (1-2,2-3,1-3,1-2-3)
	Block status	- Blocked	-	Fault locator calculation block status. When the block status is set, reset time will not work until the block status is cleared. (only for incomer fault locator)

Figure 162 - Settings with fault location algorithm at incomer side 1

Fault locator 21FL

Settings for incomer and feeder

Setting	Incomer	Feeder
Enable fault locator	☑	☐
Triggering digital input	-	-
Triggering stage	-	-
Event enabling	☑	☑
Unit for distance to fault	km	km

Status for incomer and feeder

Status	Incomer	Feeder
Algorithm condition	OK	OK
Number of faults	4	3
Fault type	12	-
Fault reactance	9.35 ohm	0.00 ohm
Distance to fault	24.0 km	0.0 km
Voltage drop	51 %	0.0 %

Incomer fault locator

Current change to trig:	50	%
Xmax limit:	500.0	ohm
Blocked before next trig:	70	s
Accept zero prefault current:	☐	
Inverse currents:	☐	
Reference current:	85	A
Trig limit current:	128	A
Fault duration:	0.48	s
Current before fault:	85	A
Fault current:	517	A
Current after fault:	0	A

Incomer line reactance

Line segment	Reactance	Length
1	0.389 Ohm	0.0 km
2	0.000 Ohm	0.0 km
3	0.000 Ohm	0.0 km
4	0.000 Ohm	0.0 km

Feeder fault locator

Pick-up setting:	20	A
Pick-up setting:	0.20	xIn
Earth factor:	0.961	
Earth factor angle:	1	°

Feeder line reactance

Line segment	Reactance	Length
1	0.400 Ohm	5.0 km
2	0.500 Ohm	10.0 km
3	0.600 Ohm	10.0 km
4	0.700 Ohm	5.0 km

FAULT LOG

	Date	hh:mm:ss.ms	Fault reactance	Distance to fault	Fault type	Voltage drop	Pre-fault current	Fault current	Current after fault	Mode
[1]	2020-02-11	08:47:38.370	9.35 ohm	24.0 km	12	51.1 %	0.85 xIn	5.17 xIn	0.00 xIn	Incomer
[2]	-	-	0.00 ohm	0.0 km	-	0.0 %	0.00 xIn	0.00 xIn	0.00 xIn	None
[3]	-	-	0.00 ohm	0.0 km	-	0.0 %	0.00 xIn	0.00 xIn	0.00 xIn	None
[4]	-	-	0.00 ohm	0.0 km	-	0.0 %	0.00 xIn	0.00 xIn	0.00 xIn	None
[5]	-	-	0.00 ohm	0.0 km	-	0.0 %	0.00 xIn	0.00 xIn	0.00 xIn	None
[6]	-	-	0.00 ohm	0.0 km	-	0.0 %	0.00 xIn	0.00 xIn	0.00 xIn	None
[7]	-	-	0.00 ohm	0.0 km	-	0.0 %	0.00 xIn	0.00 xIn	0.00 xIn	None
[8]	-	-	0.00 ohm	0.0 km	-	0.0 %	0.00 xIn	0.00 xIn	0.00 xIn	None

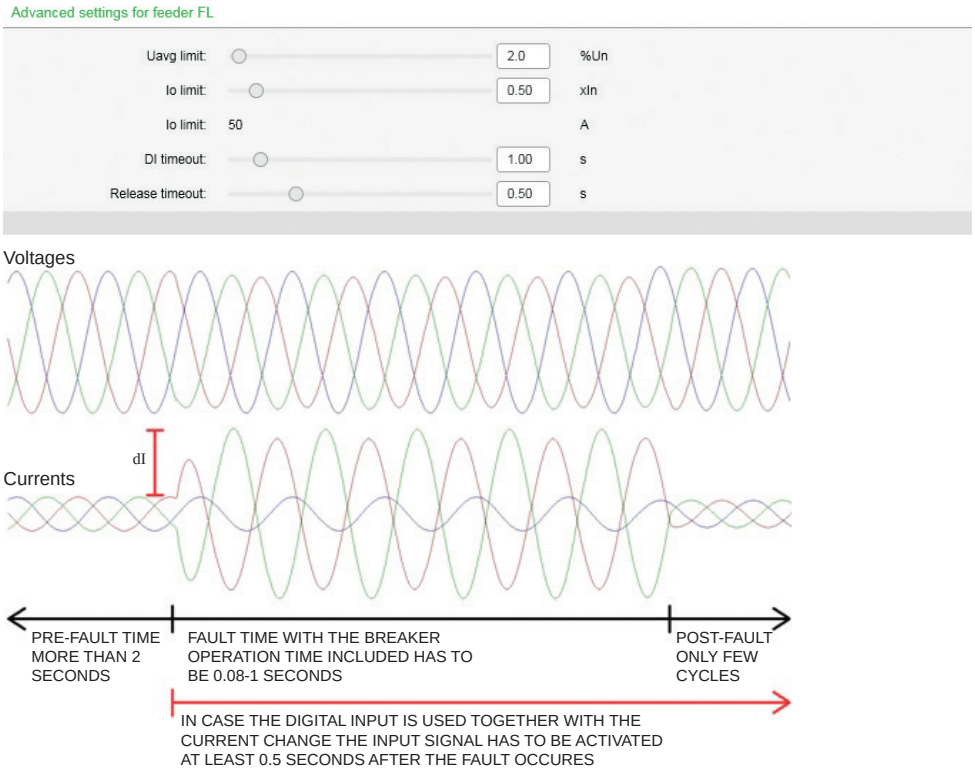
Advanced settings for feeder FL
Uavg limit:
2.0
%Un
Io limit:
0.50
xIn
Io limit:
50
A
DI timeout:
1.00
s
Release timeout:
0.50
s
Voltages
Currents
dI
PRE-FAULT TIME MORE THAN 2 SECONDS
FAULT TIME WITH THE BREAKER OPERATION TIME INCLUDED HAS TO BE 0.08-1 SECONDS
POST-FAULT ONLY FEW CYCLES
IN CASE THE DIGITAL INPUT IS USED TOGETHER WITH THE CURRENT CHANGE THE INPUT SIGNAL HAS TO BE ACTIVATED AT LEAST 0.5 SECONDS AFTER THE FAULT OCCURES

Figure 163 - Application example with fault location algorithm at the feeder side

Fault locator 21FL

Settings for incomer and feeder

Setting	Incomer	Feeder
Enable fault locator	☑	☐
Triggering digital input	-	-
Triggering stage	-	-
Event enabling	☑	☑
Unit for distance to fault	km	km

Status for incomer and feeder

Status	Incomer	Feeder
Algorithm condition	OK	OK
Number of faults	4	3
Fault type	12	-
Fault reactance	9.35 ohm	0.00 ohm
Distance to fault	24.0 km	0.0 km
Voltage drop	51 %	0.0 %

Incomer fault locator

Current change to trig:	50	%
Xmax limit:	500.0	ohm
Blocked before next trig:	70	s
Accept zero prefault current:	☐	
Inverse currents:	☐	
Reference current:	85	A
Trig limit current:	128	A
Fault duration:	0.48	s
Current before fault:	85	A
Fault current:	517	A
Current after fault:	0	A

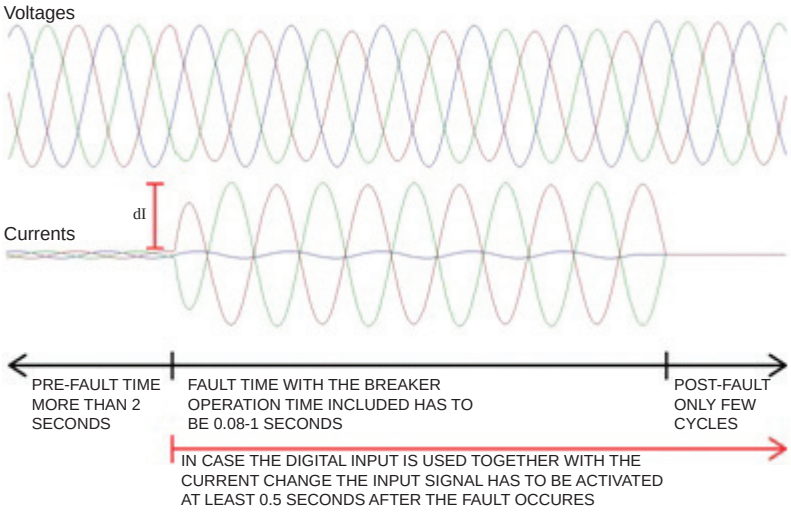

6.17 Feeder fault locator (ANSI 21FL)

ANSI 21FL	Feeder	Motor
P3U20		
P3U30	x	x

Description

The device includes a stand-alone fault locator algorithm. The algorithm can locate a short-circuit fault and an earth fault in radially-operated networks.

The fault location is given in reactance (ohms) and kilometers or miles. The fault value can then be exported, for example, with an event to a distribution management system (DMS). The system can then localize the fault. If a DMS is not available, the distance to the fault is displayed as kilometers and as a reactance value. However, the distance value is valid only if the line reactance is set correctly.

Four segments with different reactance values can be configured for a line.

Names and reactance values for widely used overhead wires are:

- Sparrow: 0.408 ohms/km or 0.656 ohms/mile
- Raven: 0.378 ohms/km or 0.608 ohms/mile

This fault locator cannot be used in incomer because the locator has no ability to compensate effect of healthy feeders away.

When the feeder fault locator is calculating short-circuit impedance, the following formula is used:

$$Z_{AB} = \frac{\overline{U_A} - \overline{U_B}}{\overline{I_A} - \overline{I_B}}$$

U_A = Vector between the voltage and the ground

U_B = Vector between the voltage and the ground

I_A = Vector between the current and the ground

I_B = Vector between the current and the ground

When the feeder fault locator is calculating ground fault impedance, the following formula is used:

$$Z_A = \frac{\overline{U_A}}{\overline{I_A} + k \times \overline{3I_0}}$$

U_A = Vector between the voltage and the ground

I_A = Vector between the current and the ground

k = Earth factor k, needs to be set by user

$3I_0$ = Earth fault overcurrent, calculated from phase currents ($I_{0\ Calc}$)

The earth factor k is calculated with the following formula:

$K_0 = (Z_{0L}-Z_{1L}) / (3 \times Z_{1L})$

Z_{0L} = Zero sequence line impedance

Z_{1L} = Positive sequence line impedance

Triggering of the fault reactance calculation happens when the start value is exceeded or both “Start setting” and “Triggering digital input” terms are fulfilled. When used, “Triggering digital input” can be either digital or virtual input.

Fault locator reset time provides a selection to clear relevant fault values. When user sets the reset time, the fault value will be cleared after the given time. When the setting is set to zero, the fault value is not cleared. It remains until the next fault occurs.

Table 133 - Setting parameters of feeder fault locator

Parameter	Value	Unit	Default	Description
Start setting	0.10–5.00	xIn	1.2	Current limit for triggering.
Triggering digital input	-; DI1–DI18 DI1 – DI16 VI1–VI4 VO1–VO6 NI1–NI64 POC1–POC16	-	-	Trigger mode (= triggering based on sudden increase of phase current, otherwise sudden increase of phase current + DIx / VIx / VOx / NIx / POCx)
Line reactance	0.010–10.000	Ohms / km	0.491	Line reactance of the line. This is used only to convert the fault reactance to kilometer.
Earth factor	0.000–10.000	-	0.678	Calculated earth factor from line specifications
Earth factor angle	-60 to +60	°	10	Angle of calculated earth factor from line specifications
Event enabling	Off/On	-	On	Event mask
Advanced settings				

Parameter	Value	Unit	Default	Description
U_{avg} limit	1.0–90.0	% Un	2.0	If the average of the phase voltages is below this limit, the voltage level is considered negligible, and the averages from the last second are used as angles for the voltages.
I_0 limit	0.10–5.00	xIn/A	0.50	If the measured I_0 is above this limit, an earth fault has occurred (otherwise, there is a short-circuit fault). An earth fault is indicated by N in the fault type (for example 2-N or 3-N).
DI timeout	0.02–10.00	s	1.00	If a triggering digital input is used, it must be asserted within this time from the start of the fault.

Parameter	Value	Unit	Default	Description
Release timeout	0.02–2.00	s	0.50	When a fault has been detected and handled, the fault locator waits for the release timeout, then waits until all the phase currents are below the start limit, after which the fault locator resets.
Time to reset	0–60	minutes	0	Time setting to reset relevant fault values, including “fault type”, “fault reactance”, “distance to fault” and ”voltage drop”.

Table 134 - Measured and recorded values of feeder fault locator

	Parameter	Value	Unit	Description
Measured values/ recorded values	Distance		km	Distance to the fault
	Xfault		ohm	Fault reactance
	Date		-	Fault date
	Time		-	Fault time
	Cntr		-	Number of faults
	Fault		A	Current during the fault
	Udrop		% Un	Voltage dip during the fault
	Type		-	Fault type (1-2, 2-3, 1-3, 1-2-3, 1-N, 2-N, 3-N, 1-N-2-N, 2-N-3-N, 3-N-1-N, 1-N-2-N-3-N)

Figure 164 - Feeder and incomer fault locator setting view

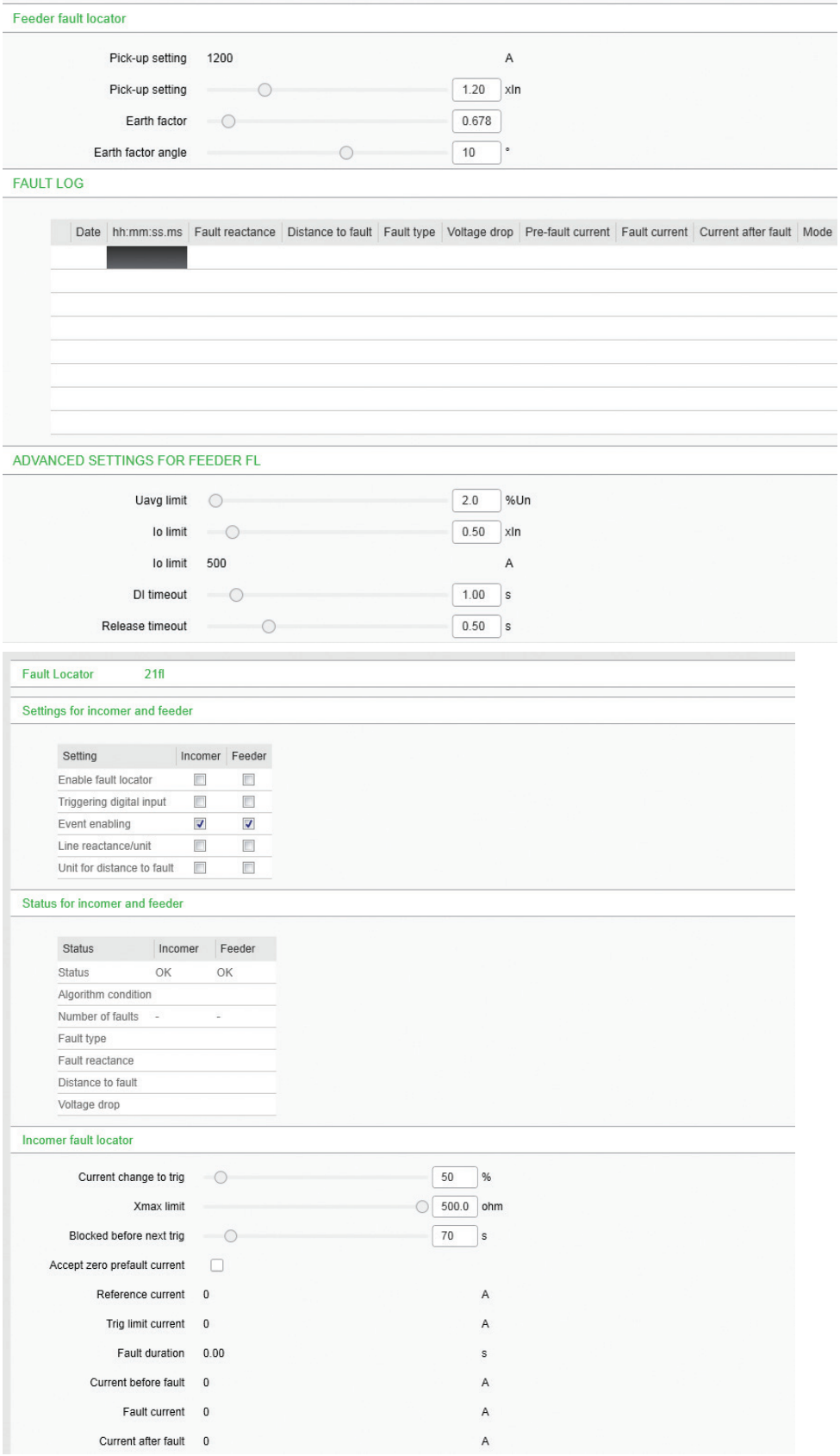

NOTE: In the fault log, the **Pre-fault current** and **Current after fault** columns are only used for the incomer fault locator.

6.18 Trip circuit supervision (ANSI 74)

Description

Trip circuit supervision is used to ensure that the wiring from the protective relay to a circuit breaker (CB) is in order. Even though the trip circuit is unused most of the time, keeping it in order is important so that the CB can be tripped whenever the relay detects a fault in the network.

Also the closing circuit can be supervised using the same principle.

NOTE: Apply trip circuit supervision using a digital input and its programmable time delay.

NOTE: Change the Digital inputs' Mode to AC in case trip circuit supervision is applied to the ac control voltage.

6.18.1 Trip circuit supervision with one digital input

The benefits of this scheme are that only one digital inputs is needed and no extra wiring from the relay to the circuit breaker (CB) is needed. Also, supervising a 24 Vdc trip circuit is possible.

The drawback is that an external resistor is needed to supervise the trip circuit on both CB positions. If supervising during the closed position only is enough, the resistor is not needed.

- The digital input is connected parallel to the trip contacts (see *Figure 165*).
- The digital input is configured as normal closed (NC).
- The digital input delay is configured to be longer than the maximum fault time to inhibit any superfluous trip circuit fault alarm when the trip contact is closed.
- The digital input is connected to a relay in the output matrix giving out any trip circuit alarm.
- The trip relay must be configured as non-latched. Otherwise, a superfluous trip circuit fault alarm follows after the trip contact operates, and the relay remains closed because of latching.
- By utilizing an auxiliary contact of the CB for the external resistor, also the auxiliary contact in the trip circuit can be supervised.

Figure 165 - Trip circuit supervision using a single digital input and an external resistor R

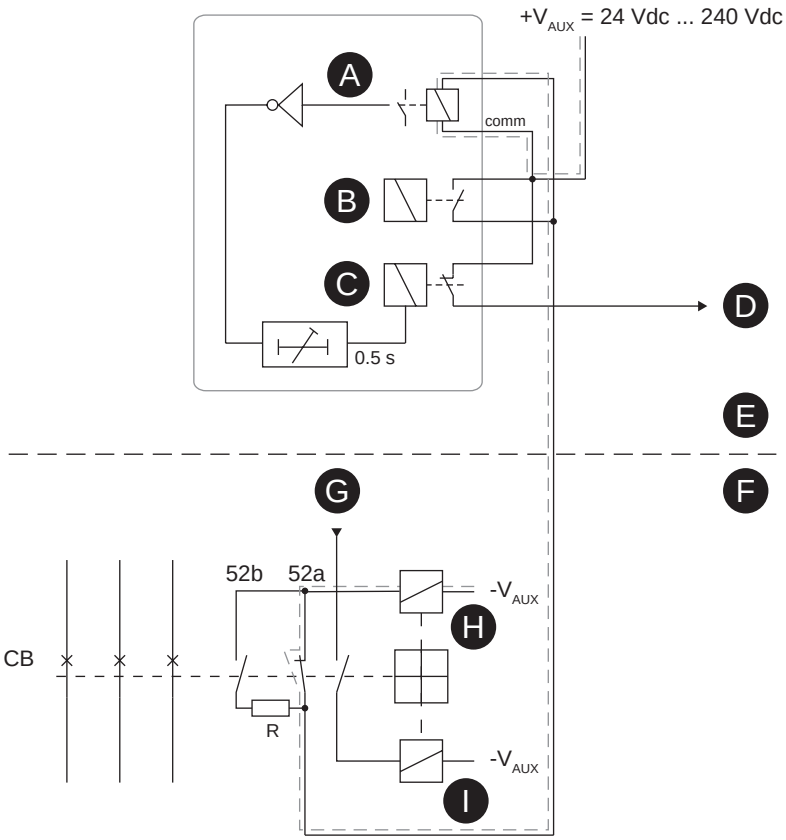

A. Digital input 1
B. Trip relay
C. Alarm relay for trip circuit failure
D. Trip circuit failure alarm
E. Relay compartment
F. Circuit breaker compartment
G. Close control
H. Open coil
I. Close coil

The circuit-breaker is in the closed position. The supervised circuitry in this CB position is double-lined. The digital input is in active state when the trip circuit is complete.

This is applicable to any digital inputs.

NOTE: The need for the external resistor R depends on the application and circuit breaker manufacturer's specifications.

Figure 166 - Alternative connection without using circuit breaker 52b auxiliary contacts

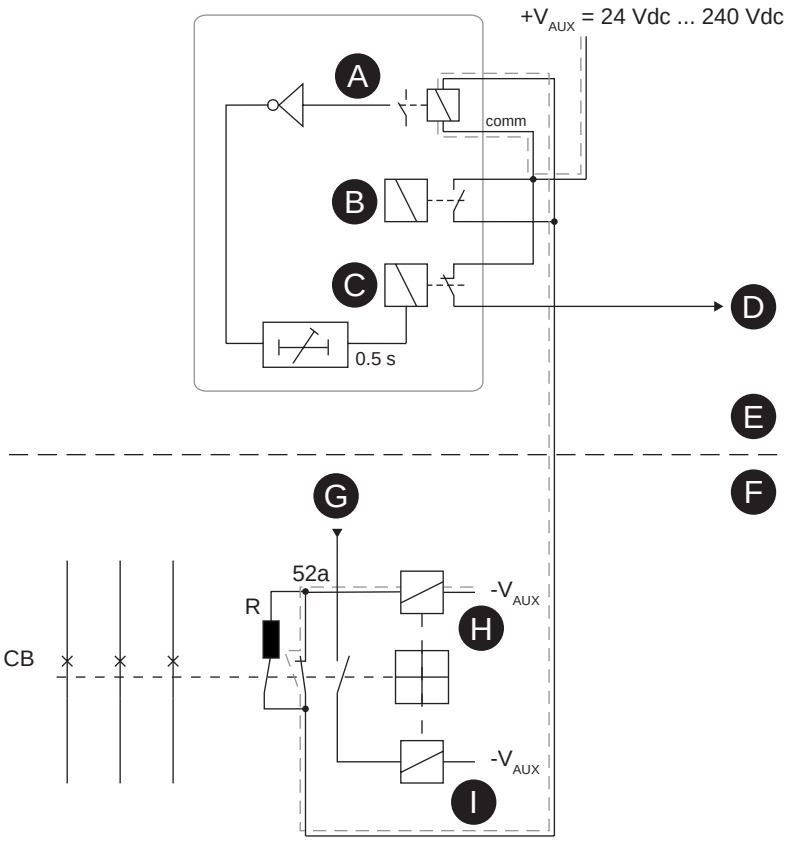

A. Digital input 1
B. Trip relay
C. Alarm relay for trip circuit failure
D. Trip circuit failure alarm
E. Relay compartment
F. Circuit breaker compartment
G. Close control
H. Open coil
I. Close coil

Trip circuit supervision using a single digital input and an external resistor R. The circuit breaker is in the closed position. The supervised circuitry in this CB position is double-lined. The digital input is in active state when the trip circuit is complete.

Alternative connection without using circuit breaker 52b auxiliary contacts. This is applicable for any digital inputs.

Figure 167 - Trip circuit supervision using a single digital input when the circuit breaker is in open position

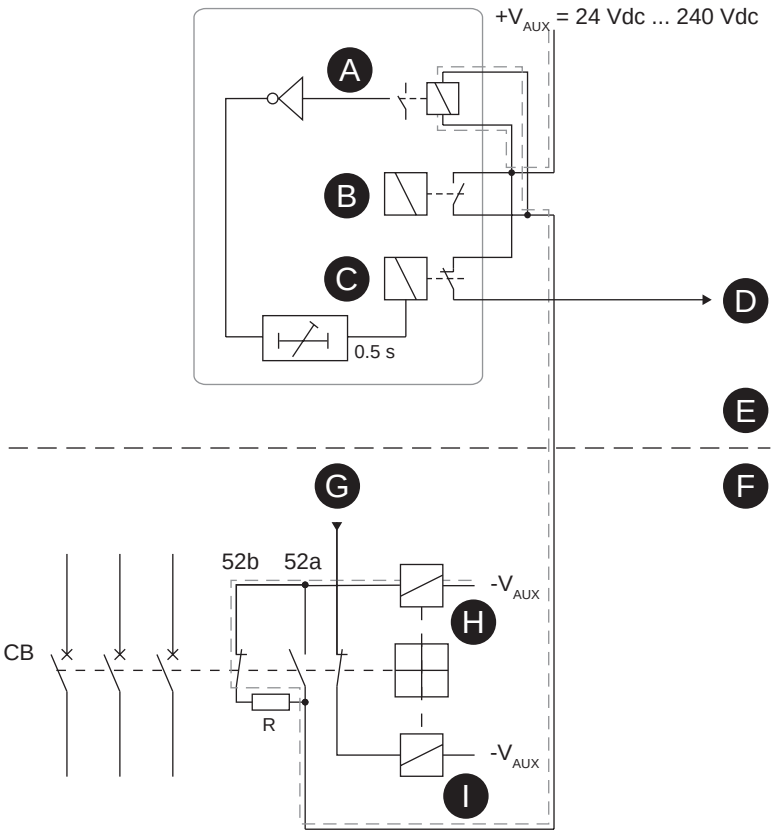

A. Digital input 1
B. Trip relay
C. Alarm relay for trip circuit failure
D. Trip circuit failure alarm
E. Relay compartment
F. Circuit breaker compartment
G. Close control
H. Open coil
I. Close coil

Figure 168 - Alternative connection without using circuit breaker 52b auxiliary contacts. Trip circuit supervision using a single digital input, when the circuit breaker is in open position

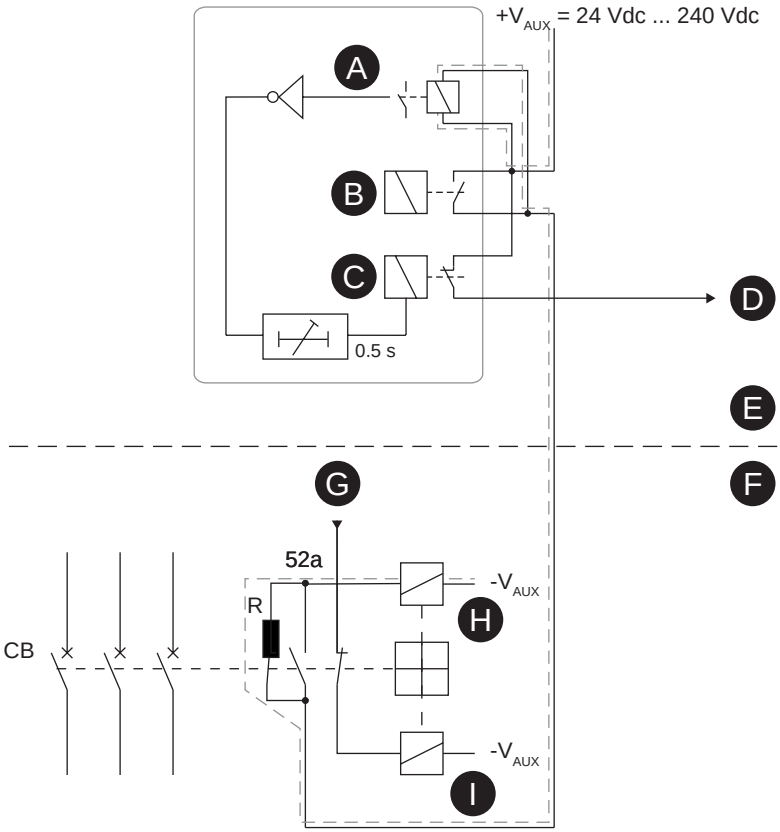

A. Digital input 1
B. Trip relay
C. Alarm relay for trip circuit failure
D. Trip circuit failure alarm
E. Relay compartment
F. Circuit breaker compartment
G. Close control
H. Open coil
I. Close coil

Figure 169 - Example of digital input DI7 configuration for trip circuit supervision with one digital input

Digital inputs

Input	State	Polarity	Delay	On Event	Off Event	Alarm display	Counters
1	0	NO	0.00 s	✓	✓	✓	0
2	0	NO	0.00 s	✓	✓	✓	0
3	0	NO	0.00 s	✓	✓	✓	0
4	0	NO	0.00 s	✓	✓	✓	0
5	0	NO	0.00 s	✓	✓	✓	0
6	0	NO	0.00 s	✓	✓	✓	0
7	0	NC	0.00 s				1

Figure 170 - Example of output matrix configuration for trip circuit supervision with one digital input

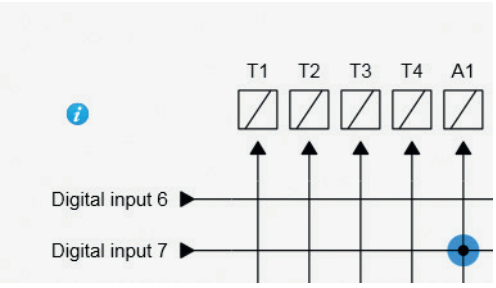

Example of dimensioning the external resistor R

U_{AUX} = 110 Vdc - 20 % + 10%, Auxiliary voltage with tolerance

U_{DI} = 18 Vdc, Threshold voltage of the digital input

I_{DI} = 3 mA, Typical current needed to activate the digital input including a 1 mA safety margin.

P_{COIL} = 50 W, Rated power of the open coil of the circuit breaker. If this value is not known, 0 Ω can be used for the R_{COIL}.

$U_{MIN} = U_{AUX}$ - 20 % = 88 V

$U_{MAX} = U_{AUX}$ + 10 % = 121 V

$R_{COIL} = U^2_{AUX} / P_{COIL}$ = 242 Ω.

The external resistance value is calculated using *Equation 38*:

Equation 38

$$R = \frac{U_{MIN} - U_{DI} - I_{DI} \cdot R_{Coil}}{I_{DI}}$$

R = (88 – 18 – 0.003 x 242)/0.003 = 23.1 kΩ

In practice, the coil resistance has no effect.

By selecting the next smaller standard size, we get **22 kΩ**.

The power rating for the external resistor is estimated using *Equation 39* and *Equation 40*.

The *Equation 39* is for the CB open situation including a 100 % safety margin to limit the maximum temperature of the resistor:

Equation 39

$$P = 2 \cdot I_{DI}^2 \cdot R$$

P = 2 x 0.003^2 x 22000 = 0.40 W

Select the next bigger standard size, for example **0.5 W**.

When the trip contacts are still closed and the CB is already open, the resistor has to withstand much higher power (*Equation 40*) for this short time:

Equation 40

$$P = \frac{U_{MAX}^2}{R}$$

P = 121^2 / 22000 = 0.67 W

A 0.5 W resistor is enough for this short time peak power, too. However, if the trip relay is closed for longer than a few seconds, a 1 W resistor should be used.

6.18.2 Trip circuit supervision with two digital inputs

The benefit of this scheme is that no external resistor is needed.

The drawbacks are that two digital inputs (DIs) from two separate groups and two extra wires from the relay to the CB compartment are needed. Additionally, the minimum allowed auxiliary voltage is 48 V dc which is more than twice the threshold voltage of the dry digital input because when the CB is in open position, the two digital inputs are in series.

When two DIs are connected in a series, the switching threshold value used with one DI is too high. Therefore, a lower value must be selected: 24 V if the nominal operation voltage for DI inputs is 110 V or 110 V if the nominal operation voltage is 220 V.

- The first digital input is connected parallel to the auxiliary contact of the circuit breaker's open coil.
- Another auxiliary contact is connected in series with the circuitry of the first digital input. This makes it possible to supervise also the auxiliary contact in the trip circuit.
- The second digital input is connected in parallel with the trip contacts.
- Both inputs are configured as normal closed (NC).
- The user’s programmable logic is used to combine the digital input signals with an AND port. The delay is configured to be longer than the maximum fault time to inhibit any superfluous trip circuit fault alarm when the trip contact is closed.
- The output from the logic is connected to a relay in the output matrix giving out any trip circuit alarm.
- Both digital inputs must have their own common potential.

  Using the other digital inputs in the same group as the upper DI in *Figure 171* is not possible in most applications. Using the other digital inputs in the same group as the lower DI in *Figure 171* is limited because the whole group is tied to the auxiliary voltage V_{AUX}.

In *Figure 171*, the supervised circuitry in this CB position is double-lined. The digital input is in active state when the trip circuit is complete.

Figure 171 - Trip circuit supervision with two digital inputs and closed CB

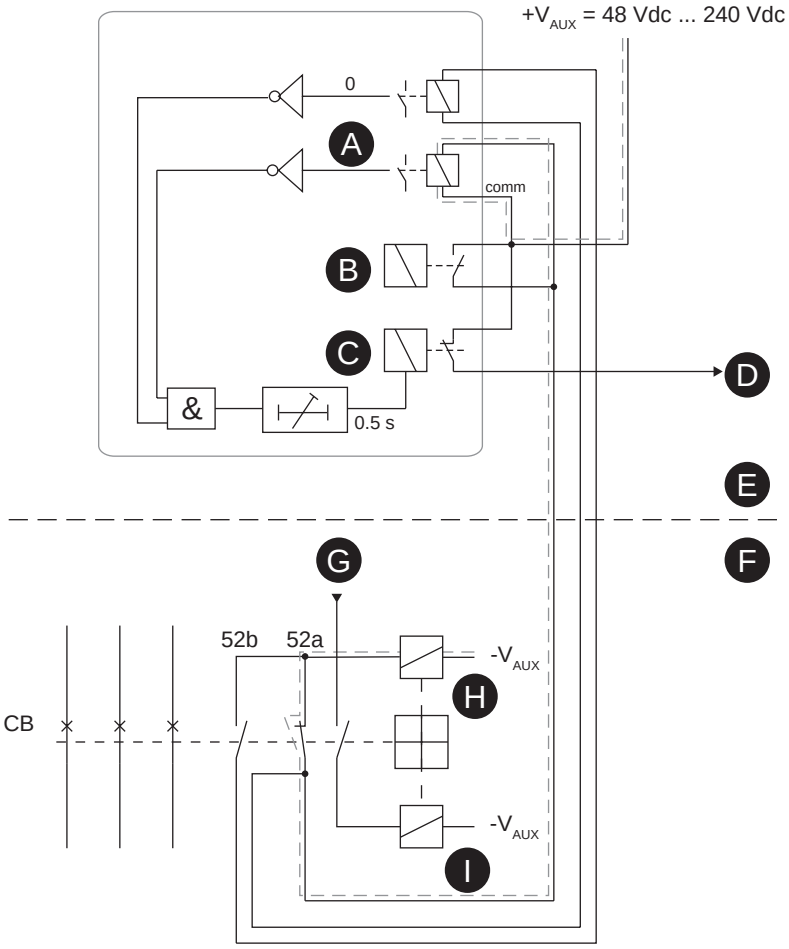

A. Digital input 1
B. Trip relay
C. Alarm relay for trip circuit failure
D. Trip circuit failure alarm
E. Relay compartment
F. Circuit breaker compartment
G. Close control
H. Open coil
I. Close coil

In *Figure 172*, the two digital inputs are in series.

Figure 172 - Trip circuit supervision with two digital inputs and CB in open position

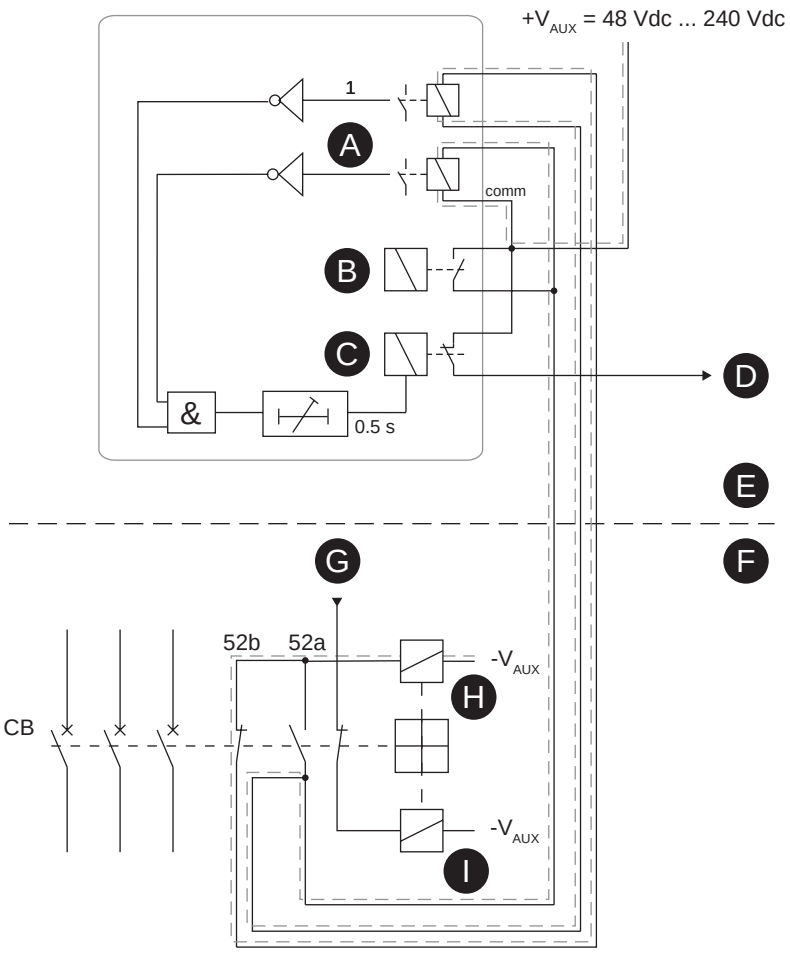

A. Digital input 1
B. Trip relay
C. Alarm relay for trip circuit failure
D. Trip circuit failure alarm
E. Relay compartment
F. Circuit breaker compartment
G. Close control
H. Open coil
I. Close coil

If DI3–DI16 are used, the minimum voltage has to be 96 Vdc.

Figure 173 - An example of digital input configuration for trip circuit supervision with two dry digital inputs DI1 and DI2

Digital inputs

Input	State	Polarity	Delay	On Event	Off Event	Alarm display	Counters
1	0	NC	0.00 s	✓	✓	✓	0
2	0	NC	0.00 s	✓	✓	✓	0

Figure 174 - An example of logic configuration for trip circuit supervision with two digital inputs DI1 and DI2.

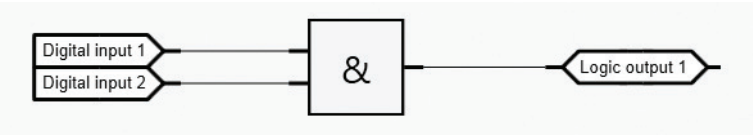

Figure 175 - An example of output matrix configuration for trip circuit supervision with two digital inputs

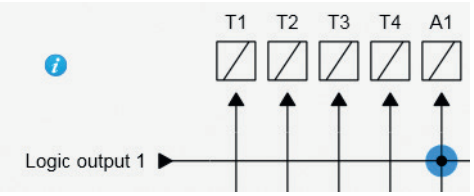

6.18.3 Trip circuit supervision with two combined digital inputs

The trip circuit supervision scheme with two digital inputs 52a and 52b can be implemented as illustrated in *Figure 176*. No external resistors are needed for this scheme to function.

Figure 176 - Trip circuit supervision scheme

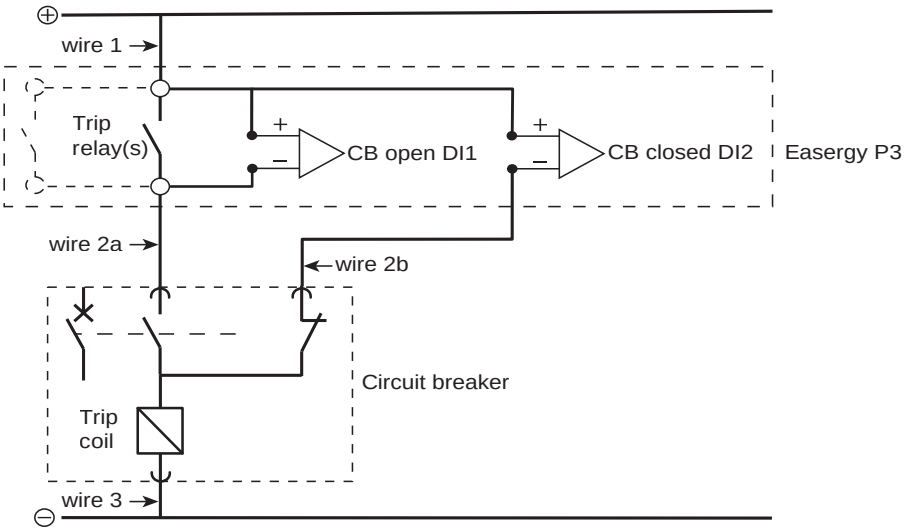

When the trip circuit is OK under normal conditions, the status of inputs is opposite (0,1) or (1,0). When the trip circuit is not OK (coil, wires, auxiliary contact state or auxiliary voltage failure), both the logic inputs are in the same state, and an alarm is issued after a delay. This delay is needed to prevent false signaling during breaker opening events. The timing is set based on breaker operating time and trip pulse length.

Table 135 - TCS alarm output depending on the CB and its auxiliary contact positions, and the possible wiring failure conditions

CB position	Conditions	CB open DI1	CB closed DI2	TCS alarm
Closed	Trip circuit OK	Closed	Open	FALSE
	Wire 1 failure[98)]	Open	Open	TRUE
	Wire 2a failure[98)]	Open	Open	TRUE
	Wire 3 or trip coil failure[98)]	Open	Open	TRUE
Open	Trip circuit OK	Open	Closed	FALSE
	Wire 1 failure[98)]	Open	Open	TRUE
	Wire 2b failure[98)]	Open	Open	TRUE
	Wire 3 or trip coil failure[98)]	Open	Open	TRUE

[98)] "failure" indicates that one or more of the components are permanently open circuit or short circuit

Figure 177 - Block diagram of trip circuit supervision (ANSI 74)

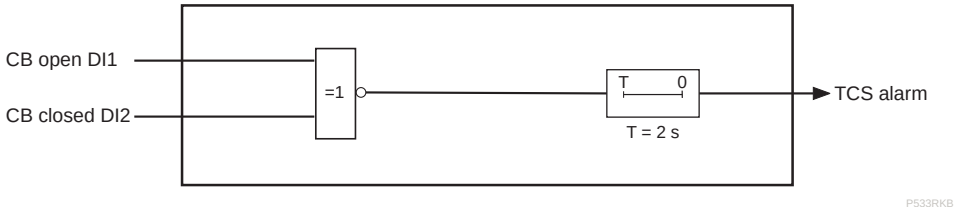

7 Communication and protocols

7.1 Cybersecurity

According to a classic model of information security, the three security goals are:

- confidentiality (prevention of unauthorized disclosure of information)
- integrity (prevention of unauthorized modification of information)
- availability (ensuring that information is always available to authorized users)

These goals may be used as a starting point in designing security solutions for electric power distribution.

We recommend that:

- Computer systems used to design or operate electric power distribution systems are designed with the *principle of least privilege*, in other words, that users only have those access rights that they need to perform their duties.
- All workstations and servers have an effective antimalware solution, such as a virus scanner.
- Computer systems are protected with adequate physical security measures to help to prevent physical tampering of the devices or networks.

NOTICE

CYBERSECURITY HAZARD

- Change all passwords from their default values when taking the protection device into use.
- Change all passwords regularly.
- Ensure a minimum level of password complexity according to common password guidelines.

Failure to follow these instructions can increase the risk of unauthorized access.

Related topics

2.4 Access to device configuration

7.2 Communication ports

In the front panel, there is a USB port for connection to the eSetup Easergy Pro setting and configuration tool.

At the back, the relay may optionally have the following connections, depending on the type of the communication option:

- RS-485 connection (remote port)
- RS-232 connection for serial protocols (remote and extension ports), and in addition clock synchronization port (IRIG-B).
- 1 x RJ-45 or 1 x LC connection for Ethernet protocols (Ethernet port).
- 2 x RJ-45 or 2 x LC connection for Ethernet protocols (Ethernet port).

Each communication port can be individually enabled or disabled with the Configurator access level via:

- the front panel of the PowerLogic P3 protection device
- eSetup Easergy Pro
- the web HMI

NOTE: By default and when the device comes from the factory, Ethernet Protocol 1 is enabled and the default protocol is IEC-61850. Also Ethernet Protocol 2 is enabled and the default protocol is Modbus TCPs.

7.2.1 Remote and extension ports

Remote and extension ports are used for serial protocols like Modbus or IEC 60870-5-103. The physical interface is described in *9.6 Connections*.

The parameters for the port can be set via the relay's front panel or using eSetup Easergy Pro. The number of available serial ports depends on the type of the communication option ordered.

NOTE: The relay supports using two communication protocols simultaneously but the same protocol can be used only once. The protocol configuration menu contains selection for the protocol, port settings and message/error/timeout counters.

7.2.2 Ethernet port

The Ethernet port is used for Ethernet protocols like IEC61850 and Modbus TCP.

The physical interface is described in *9.6 Connections*.

The parameters for the port can be set via the device's front panel or using eSetup Easergy Pro. Two different protocols can be used simultaneously – both protocols use the same IP address and MAC address (but different port number).

7.2.3 Disabling the Ethernet communication

NOTICE

CYBERSECURITY HAZARD

- Disable the Ethernet communication in environments where effective antimalware solutions have not been taken into use.
- For transmitting data over an internal network, segment the network physically or logically and restrict access using standard controls such as firewalls and other relevant features supported by your device such as IPTable allowlisting.
- For transmitting data over an external network, encrypt protocol transmissions over all external connections using an encrypted tunnel, TLS wrapper or a similar solution.

Failure to follow these instructions can increase the risk of unauthorized access.

NOTE: The device is not capable of transmitting data encrypted using Ethernet protocols. If other users gain access to your network, transmitted information can be disclosed or subject to tampering.

1. To disable all Ethernet-based protocols:
   a. In eSetup Easergy Pro, go to **Communication > Protocol configuration**.
   b. Under **Ethernet**, disable the Ethernet port by unselecting the **Enable Ethernet communication** checkbox.

   Figure 178 - Disabling the Ethernet port

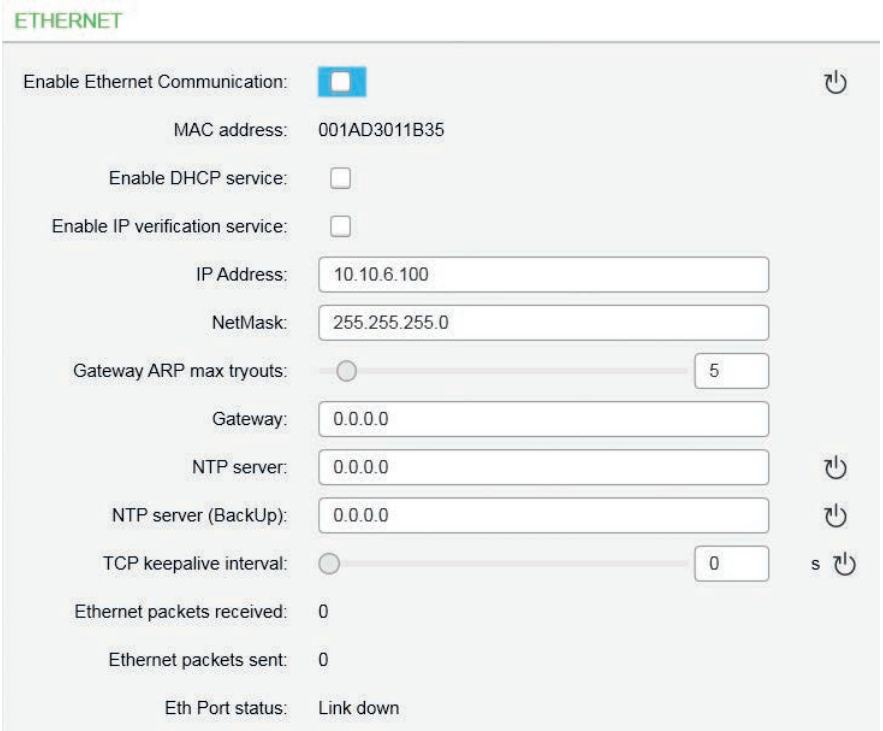

   This disables all the Ethernet-based protocols (FTP, HTTP, Telnet, and Ethernet protocols).

2. To disable FTP, HTTP, Telnet, or Ethernet protocols separately:
   a. Under **Ethernet**, select the **Enable Ethernet communication** checkbox.
   b. Unselect the **Enable...** checkbox for the servers or protocols you want to disable.

Figure 179 - Disabling individual Ethernet-based protocols

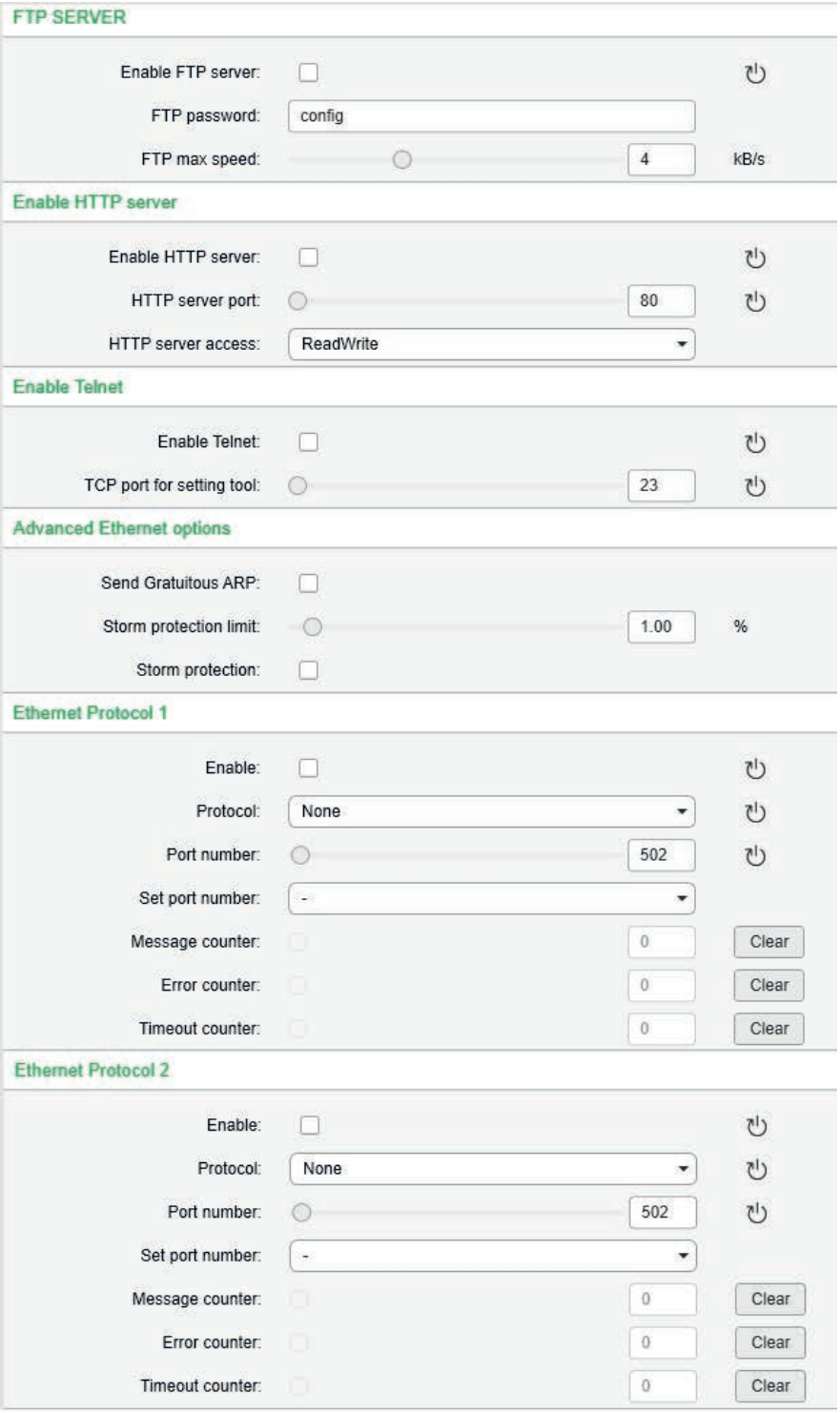

7.2.4 Disabling remote configuration

Disabling remote configuration is a common practice to improve device security by preventing unauthorized users from changing the device or configuration remotely.

To disable remote configuration in general (through GetSet protocol on Telnet port and also through HTTP using a web browser), you can use the parameter “Lock

Remote Config" available on the **Protocol configuration** page of eSetup Easergy Pro and function keys (F1 or F2) or virtual inputs (VI1-VI20). Status of locking is presented by the value of “Remote Config Locked" parameter (No or Yes).

Here we use the F1 key as an example to show you how to lock the remote configuration.

1. Login to eSetup Easergy Pro with **Configurator** level.
2. Select the **Enable HTTP Server** checkbox and **Enable Telnet** checkbox.
3. Select **F1** from the **Lock Remote Config** drop-down list.

Figure 180 - Selecting F1

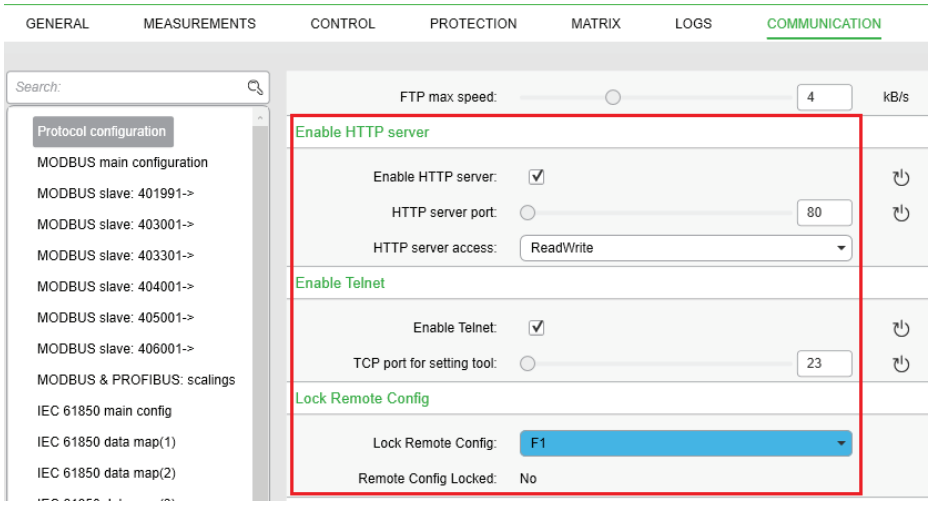

4. Click **Write**.

   The status of **Remote Config Locked** is changed from “No” to “Yes”.

Figure 181 - Writing changes

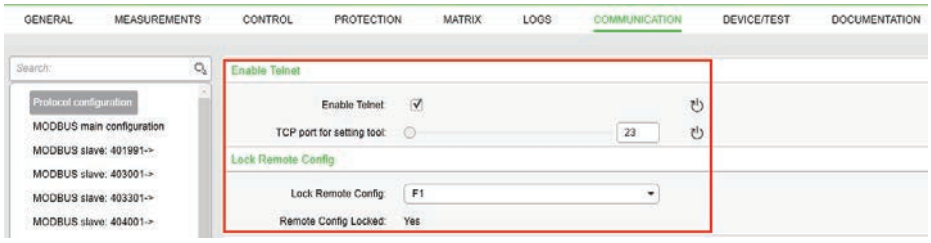

NOTE: Locking or unlocking remote configuration by using function keys is password protected. Only **Configurator** level password is required to change lock value.

Operation principle:

- Locking remote configuration when session is open causes connection drop.
- When remote configuration is locked any attempt to connect is rejected.
- Locking remote configuration when web browser is used causes that every next HTTP request will be rejected (page reloading or parameter setting attempt).

7.3 Storm protection

Storm protection limits the number of broadcast messages, for example, address resolution protocol (ARP) messages that are forwarded to the central processing unit (CPU) or to the protection device's second Ethernet interface. Storm protection may be necessary if the Ethernet network contains devices that may send a big amount of ARP requests when starting up or during the normal operation. If storm protection is not enabled, the protection devices can be overloaded with the big number of ARP messages.

The storm protection limit defines how big percentage of the broadcast messages are forwarded to the CPU.

Storm protection level 0.01% means 15 packets per second in a 100 Mbps network. Broadcast traffic forwarded to CPU can be limited down to 15% for 100 Mbps. This is based on a theoretical maximum of 100 packets per second that the CPU can receive and process.

Storm protection can be enabled in the **Advanced Ethernet options** setting view with the **Storm protection on Port1** and **Storm protection on Port2** parameters.

Figure 182 - Storm protection properties

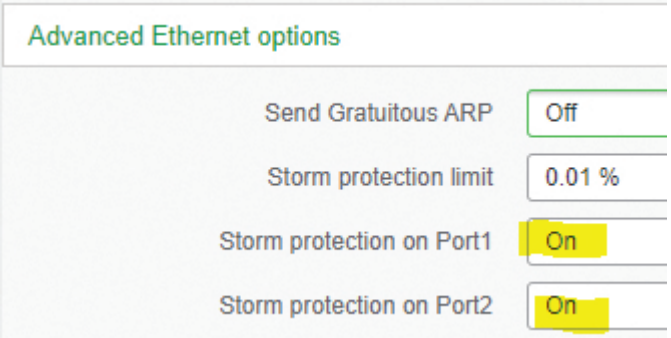

7.4 Parallel Redundancy Protocol

The Parallel Redundancy Protocol (PRP) implemented in PowerLogic P3 devices is specified in the IEC62439-3 (Clause 4) standard and is available when a dual-port, 100 Mbps Ethernet interface card is used.

PRP properties:

- Ethernet redundancy method independent of any industrial Ethernet protocol or topology (tree, ring or mesh)
- seamless switchover and recovery in case of failure (no delay)
- continuous supervision of redundancy for better management of network devices
- suitable for hot swap - 24 hour/365 day operation in substations
- allows mixing of devices with single and dual network interfaces on the same local area network (LAN)
- allows HMI devices (laptops, workstations) to be connected to the network using standard Ethernet adapters
- particularly suited for hard real-time systems such as substation automation, high-speed drives and transportation

For additional information, see application note *Parallel Redundancy Protocol for Easergy P3Ux and Easergy P3x3x relays with dual-port 100 Mbps Ethernet interface* (P3/EN ANCOM/A004).

Figure 183 - **Redundancy protocol for Ethernet** setting view

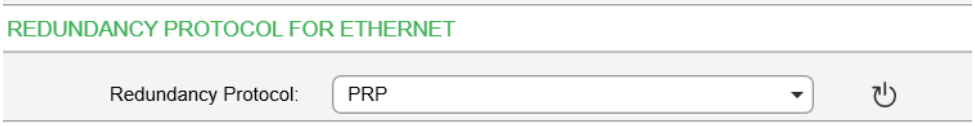

Figure 184 - Parallel Redundancy Protocol setting view

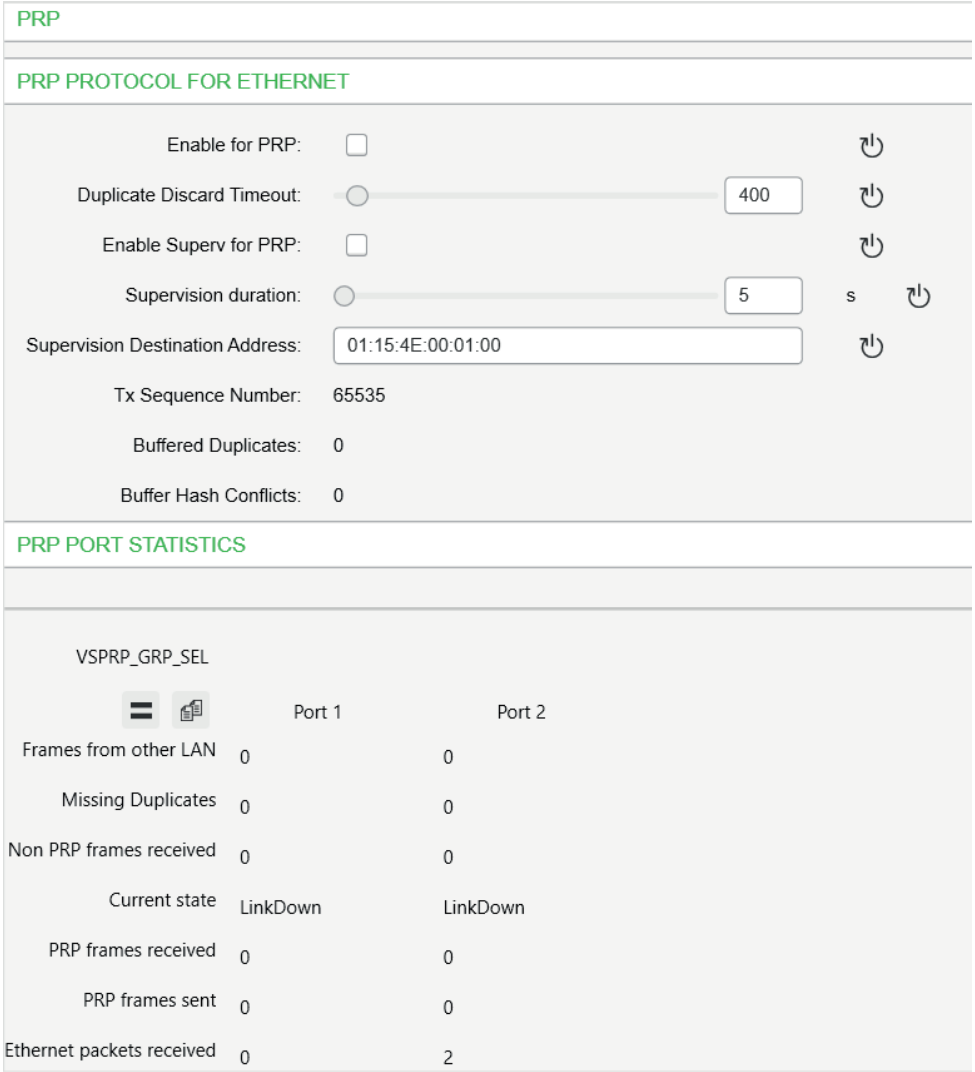

7.5 Communication protocols

The communication protocols enable the transfer of the following type of data:

- events
- status information
- measurements
- control commands

- clock synchronization
- some settings through SPA bus, IEC-103, Modbus and IEC-61850 protocols
- disturbance recordings through IEC-103, Modbus and IEC-61850 protocols

This product contains software developed by Viola Systems.

7.5.1 Modbus RTU and Modbus TCP

Modbus RTU and Modbus TCP protocols are often used in power plants and industrial applications. The difference between these two protocols is the media. Modbus TCP uses Ethernet and Modbus RTU uses RS-485, optic fibre, or RS-232.

Modbus TCP supports using two masters and IEC 61850 at the same time.

eSetup Easergy Pro shows a list of all available data items for Modbus. They are also available as a zip file ("Communication parameter protocol mappings.zip").

The information available via Modbus RTU and Modbus TCP includes:

- status values
- control commands
- measurement values
- events
- protection settings
- disturbance recordings

The Modbus communication is activated via a menu selection with the parameter "Protocol".

For more information on Modbus configuration, see the document *P3APS18025EN Modbus configuration instructions*.

For the Ethernet interface configuration, see *7.2.2 Ethernet port*.

7.5.2 Profibus DP

The Profibus DP protocol is widely used in the industry. An external VPA 3CG option module and VX084 cable are required.

Device profile "continuous mode"

In this mode, the relay is sending a configured set of data parameters continuously to the Profibus DP master. The benefit of this mode is the speed and easy access to the data in the Profibus master. The drawback is the maximum buffer size of 128 bytes, which limits the number of data items transferred to the master. Some PLCs have their own limitation for the Profibus buffer size, which may further limit the number of transferred data items.

Device profile "Request mode"

Using the request mode, it is possible to read all the available data from the PowerLogic P3 relay and still use only a very short buffer for Profibus data transfer. The drawback is the slower overall speed of the data transfer and the need of increased data processing at the Profibus master as every data item must be separately requested by the master.

NOTE: In the request mode, it is not possible to read continuously only one single data item. At least two different data items must be read in turn to get updated data from the relay.

There is a separate manual for VPA 3CG for the continuous mode and request mode. The manual is available for downloading on our website.

Available data

eSetup Easergy Pro shows the list of all available data items for both modes. A separate document "Communication parameter protocol mappings.zip" is also available.

7.5.3 SPA-bus

The relay has full support for the SPA-bus protocol including reading and writing the setting values. Also, reading multiple consecutive status data bits, measurement values or setting values with one message is supported.

Several simultaneous instances of this protocol, using different physical ports, are possible, but the events can be read by one single instance only.

There is a separate document "Communication parameter protocol mappings.zip" of SPA-bus data items available.

7.5.4 IEC 60870-5-103 (IEC-103)

The IEC standard 60870-5-103 "*Companion standard for the informative interface of protection equipment*" provides a standardized communication interface to a primary system (master system).

The unbalanced transmission mode of the protocol is used, and the relay functions as a secondary station (slave) in the communication. Data is transferred to the primary system using the "data acquisition by polling" principle.

The IEC functionality includes application functions:

- station initialization
- general interrogation
- clock synchronization
- command transmission.

It is also possible to transfer parameter data and disturbance recordings via the IEC 103 protocol interface.

The following application service data unit (ASDU) types can be used:

- ASDU 1: Time-tagged message
- ASDU 3: Measurands I
- ASDU 5: Identification message
- ASDU 6: Time synchronization
- ASDU 8: Termination of general interrogation
- ASDU 10: Generic data

The relay accepts:

- ASDU 6: Time synchronization
- ASDU 7: Initiation of general interrogation
- ASDU 10: Generic data

- ASDU 20: General command
- ASDU 21: Generic command
- ASDU 23: Disturbance recorder file transfer

The data in a message frame is identified by:
- type identification
- function type
- information number.

These are fixed for data items in the compatible range of the protocol, for example, the trip of I> function is identified by:
- type identification = 1
- function type = 160
- information number = 90

"Private range" function types are used for such data items that are not defined by the standard (for example, the status of the digital inputs and the control of the objects).

The function type and information number used in private range messages is configurable. This enables flexible interfacing to different master systems.

For more information on IEC 60870-5-103 in PowerLogic P3 relays, see the "IEC 103 Interoperability List.pdf" and "Communication parameter protocol mappings.zip" documents.

7.5.5 DNP 3.0

The relay supports communication using the DNP 3.0 protocol. The following DNP 3.0 data types are supported:
- binary input
- binary input change
- double-bit input
- binary output
- analog input
- counters

For more information, see the “DNP 3.0 Device Profile Document.pdf" and “"Communication parameter protocol mappings.zip"”. DNP 3.0 communication is activated via menu selection.

7.5.6 IEC 60870-5-101 (IEC-101)

The IEC 60870-5-101 standard is derived from the IEC 60870-5 protocol standard definition. In PowerLogic P3 relays, the IEC 60870-5-101 communication protocol is available via menu selection. The relay works as a controlled outstation (slave) unit in unbalanced mode.

The supported application functions include process data transmission, event transmission, command transmission, general interrogation, clock synchronization, transmission of integrated totals, and acquisition of transmission delay.

For more information on IEC 60870-5-101 in PowerLogic P3 relays, see the "Communication parameter protocol mappings.zip" document.

7.5.7 IEC 61850

The IEC 61850 protocol is available with the optional communication module. It can be used to read or write static data from the relay or to receive events and to receive or send GOOSE messages from or to other relays.

The IEC 61850 server interface includes the following features:

- configurable data model: selection of logical nodes corresponding to active application functions
- configurable pre-defined data sets
- supported dynamic data sets created by clients
- supported reporting function with buffered and unbuffered report control blocks
- support for changing selected setting parameters of the protection functions
- sending analogue values over GOOSE
- supported control modes:
  - direct with normal security
  - direct with enhanced security
  - select before operation with normal security
  - select before operation with enhanced security
- supported horizontal communication with GOOSE: configurable GOOSE publisher data sets, configurable filters for GOOSE subscriber inputs, GOOSE inputs available in the application logic matrix
- 32 data points can be published with GOOSE (two goose control blocks with maximum 16 data points).
- 64 binary data points and five analog data points can be subscribed in GOOSE (maximum five different MAC addresses).
- The maximum number of clients is eight (the maximum number of BRCBs is eight and the maximum number or URCBs is eight).
- Both Ed1 and Ed2 are supported and can be selected with a parameter.

  NOTE: Configure a maximum of 2 clients for the IEC 61850 application.

For additional information, see separate documents:
- *IEC 61850 Edition 2 Certificate for Easergy P3*
- *Easergy P3 communication protocol parameter mapping*
- *IEC 61850 configuration instructions*

Figure 185 - IEC 61850 default settings

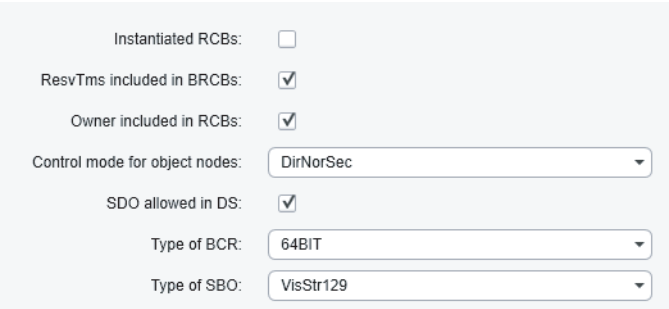

7.5.8 Ethernet/IP

The relay supports communication using the Ethernet/IP protocol which is a part of the Common Industrial Protocol (CIP) family. The Ethernet/IP protocol is available with the optional in-built Ethernet port. The protocol can be used to read or write data from or to the relay using request / response communication or via cyclic messages transporting data assigned to assemblies (sets of data).

For more detailed information and parameter lists for Ethernet/IP, refer to a separate application note “EtherNet/IP configuration instructions.pdf”.

For the complete data model of Ethernet/IP, see the document “DeviceNet and EtherNetIP data model.pdf” and "Communication parameter protocol mappings.zip".

7.5.9 HTTP server – Webset

The Webset HTTPS configuration interface provides the option to configure the relay with a standard web browser such as Internet Explorer, Mozilla Firefox, or Google Chrome. The feature is available when the communication option C, D, E or F is in use.

A subset of the relays's features is available in the Webset interface. The group list and group view from the relay are provided, and most groups, except the LOGIC and the MIMIC groups are configurable.

7.5.10 IEC 60870-5-104 (IEC-104)

The IEC 60870-5-104 standard is derived from the IEC 60870-5 protocol standard definition. It is a combination of the application layer of IEC 60870-5-101 and the transport functions provided by a TCP/IP protocol stack.

In PowerLogic P3 relays, the IEC 60870-5-104 communication protocol is available via menu selection on the Ethernet ports. The relay works as a controlled station (server). The supported application functions include process data transmission, event transmission, command transmission, general interrogation, clock- synchronization, and transmission of integrated totals. For more information on IEC 60870-5-104 in PowerLogic P3 relays, see the "Communication parameter protocol mappings" document (P3TDS17005).

7.6 IP filter

PowerLogic P3 devices contain a simple IP filter (IP firewall), which can be used to filter incoming TCP/IP connections. This filtering applies to all protocols assigned as Ethernet Protocol 1 and Ethernet Protocol 2, and can be configured via eSetup Easergy Pro.

Figure 186 - IP firewall setting view

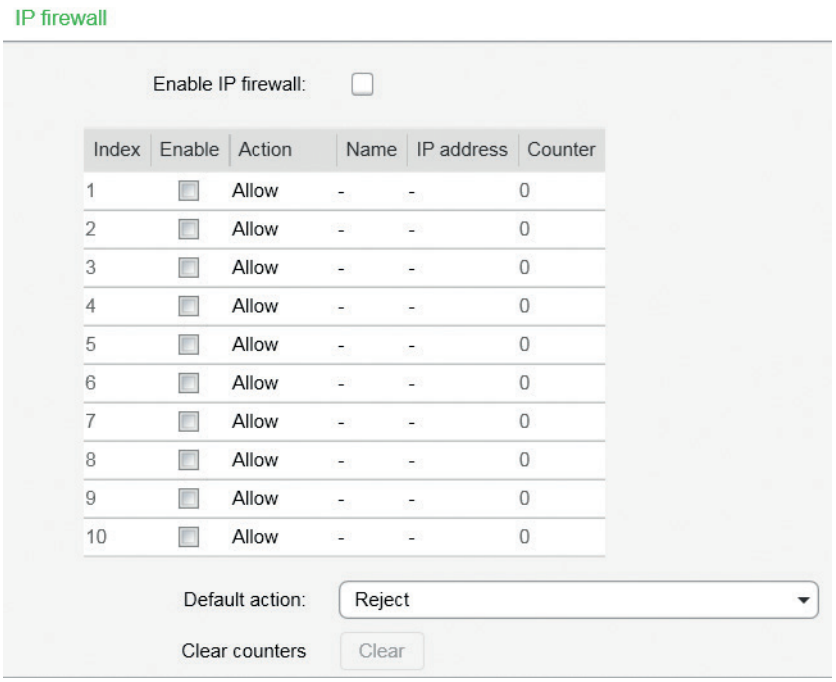

The IP filter works based on configured rules. Incoming IP packets are compared against the rules, and when a matching rule is found, the packet is handled using the action specified for the rule. If none of the rules matches the packet, the default action is taken on the packet. The IP filter records how many times a packet has matched a rule. The number is shown in the **Counter** column.

On TCP connections, the rules are mostly applied only when a connection is opened.

7.6.1 Configuring the IP filter

You can configure up to 10 rules for the IP filter via eSetup Easergy Pro and enable each rule individually.

1. In eSetup Easergy Pro, go to **Communication > Protocol configuration.**
2. In the **IP firewall** setting view, select the **Enable IP firewall** checkbox to enable the firewall.

Figure 187 - IP firewall setting view

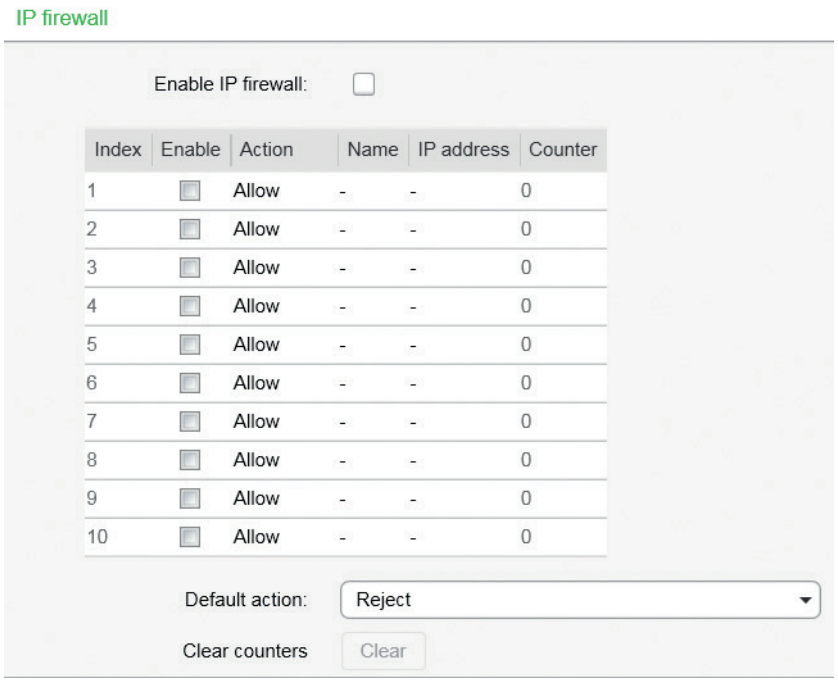

3. In the **IP firewall** setting view, create a rule.
   a. In the **Name** column, give the rule a name (maximum 32 characters) that describes its purpose .
   b. In the **IP address** column, specify an IP address.

      The IP address is used to filter the incoming IP packets based on the (apparent) IP address of the source device. There are four options.

      Table 136 - IP address for the IP filter

IP address	Description
Any	By writing a dash or value zero in this column, the rule is set to match any source IP address. The column shows a dash.
Single IP address	If a single IP address (such as 192.168.0.10) is written here, the packets (or connections) must originate from this IP address to match the rule.
IP subnet	If all IP addresses in a subnet should match this rule, write the subnet here using the CIDR notation. For example, notation 192.168.0.0/24 matches all IP addresses in the range 192.168.0.0–192.168.0.255.
IP address range	If a range of IP addresses (for example, 192.168.0.20–192.168.0.30) is written here, packets from these addresses match the rule. Both end points of this range are inclusive.

NOTE: If the matching range of IP addresses can be expressed using the CIDR notation, the range is expressed in this format, regardless of how the range was entered into the configuration. As a result, the presentation format of the configuration as it is read from the device might not match the format in which it was entered. This may cause problems with eSetup Easergy Pro because this tool expects the presentation format to match exactly. To work around this issue, select the **Reset and read current view** command in eSetup Easergy Pro after writing the configuration. This is required to handle the large number of different input formats supported.

c. In the **Action** column, specify an action for the rule.

There are four options.

Table 137 - Actions for IP filter

Action	Description
Allow	The packet is allowed to continue normally. This means that the specified source devices can use the specified services on the P3 device.
Reject[99)]	The packet is blocked and the remote peer is informed about this decision.
Drop	The packet is blocked without informing the remote peer.
Cont.	The processing of the other rules continues on this packet normally.

[99)] Because of the implementation details in the PowerLogic P3 TCP/IP stack, rules that are given the Reject action sometimes behave as if their action was Drop.

7.6.2 Unexpected packets

The IP filter also can also detect unexpected packets. For example, if a client attempts to close a connection that does not exist, this is considered an unexpected packet.

Certain techniques used by hackers produce unexpected packets, but such packets may also appear on the network if some packets are lost or dropped because of a malfunctioning network device. Some devices may also have programming errors or bugs produce unexpected packets in their TCP/IP stack.

The unexpected packets feature attempts to distinguish between these two sources based on the number of unexpected packets detected within a configurable “recent period”. If the number of these packets is greater than the configured limit, the selected alarm signal is triggered.

Figure 188 - Unexpected packets setting view

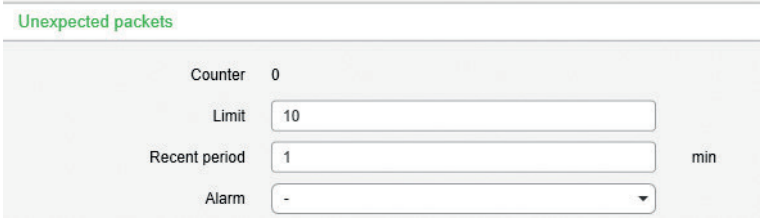

Table 138 - Parameters for unexpected packages

Parameter	Description
Counter	Counts the number of unexpected packets detected within the configured recent period.
Limit	The limit after which an alarm is given
Recent period	The number of unexpected packets counted within this period is compared to the configured limit value • Default value: 1 minute • Maximum value: 65535 minutes (45 days)
Alarm	Select which CS alarm signal (CS Alarm 1/CS Alarm 2) is activated when the set limit is exceeded. The alarms can be assigned to other signals in the output matrix.

7.6.3 Alarms

Active cybersecurity (CS) alarms can be viewed in the **Alarms** view. When an alarm signal has been asserted, it remains active until it is cleared with the **Clear alarms** command.

Figure 189 - Alarms

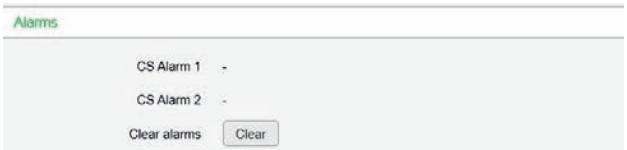

8 Applications and configuration examples

This chapter describes the protection functions in different protection applications.

The relay can be used for line/feeder protection of medium voltage networks with a grounded, low-resistance grounded, isolated or a compensated neutral point. The relays have all the required functions to be applied as a backup relay in high-voltage networks or to a transformer differential relay. In addition, the relay includes all the required functions to be applied as a motor protection relay for rotating machines in industrial protection applications.

The relays provide a circuit breaker control function. Additional primary switching relays (earthing switches and disconnector switches) can also be controlled from the front panel or the control or SCADA/automation system. A programmable logic function is also implemented in the relay for various applications, for example interlockings schemes.

8.1 Substation feeder protection

Figure 190 - PowerLogic P3U20 and P3U30 used in substation feeder protection

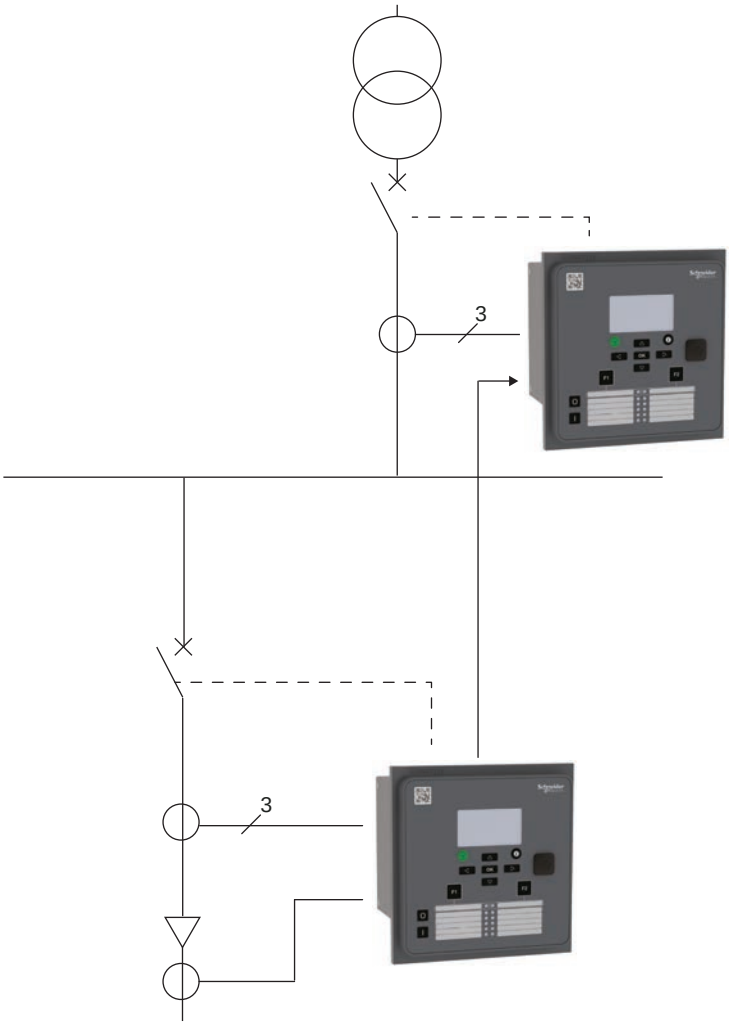

In this application, an instantaneous overcurrent stage I>>> of the relay located in the incoming feeder is blocked with a start signal coming from the relays located in the outgoing feeders. This prevents the instantaneous stage from operating in the incoming feeder if the fault happens in the outgoing feeders. The interlocking scheme enables a lower time delay setting for the instantaneous stage of the incoming feeder, thus providing shorter busbar fault tripping times.

Figure 191 - PowerLogic P3U20 and P3U30 used in substation feeder protection in compensated network

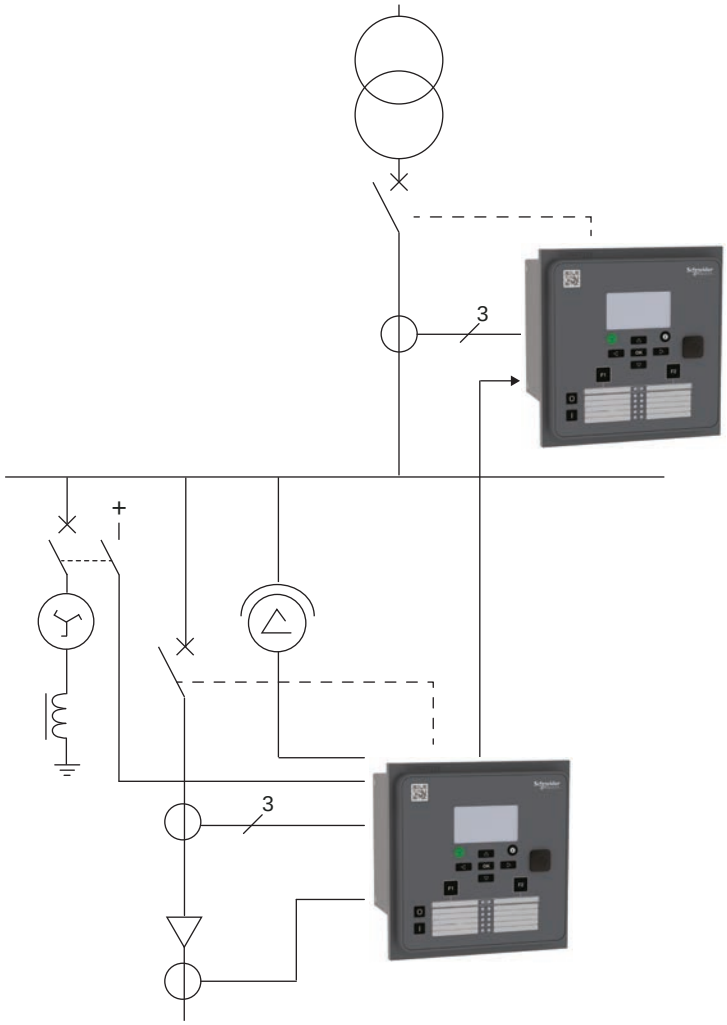

In this application, the network grounding information, taken from Petersen coil, is obtained for the directional earth fault overcurrent stage through relay's digital input. The grounding status controls dynamically the operation characteristics of the directional earth fault overcurrent stage. For a grounded network, Res mode and for an isolated network, Cap mode is applied.

8.2 Industrial feeder / motor protection

Figure 192 - PowerLogic P3U20 and P3U30 used in cable protection of an industry plant network.

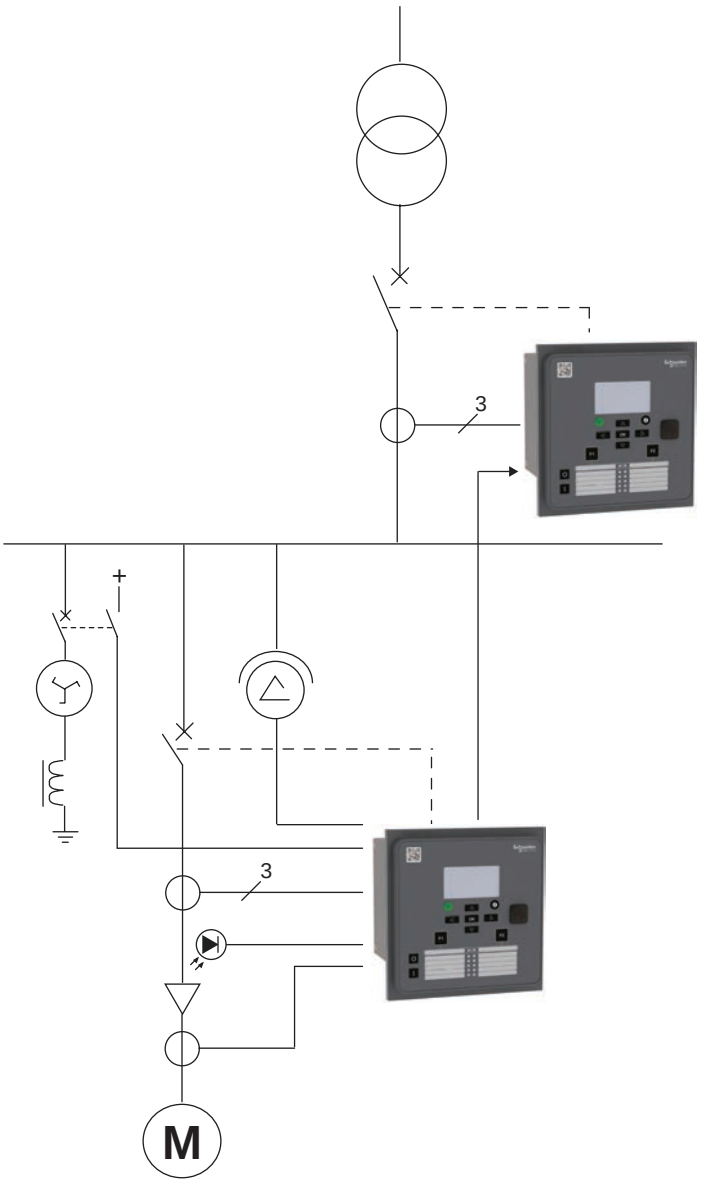

The relay supports directional earth fault protection and three-phase overcurrent protection that is required in a cable feeder. Furthermore, the thermal stage can be used to protect the cable against overloading. All necessary motor protection functions are supported when using the motor application mode.

8.3 Using CSH120 and CSH200 with C = I_{01} 0.2 A core balance CT input

General

The CSH120 and CSH200 core balance CTs are for direct earth fault overcurrent measurement. The only difference between them is the diameter. Because of their low-voltage insulation, they can only be used on cables.

These core balance CTs can be connected to the PowerLogic P3 protection device range when 0.2 A I_0 input is used. This needs to be determined when ordering the protection device (select 0.2 A for the earth fault current input in the order code).

Settings in the PowerLogic P3 protection device

When CSH120 or CSH200 is connected to an PowerLogic P3 protection device, to secure correct operation of the protection functions and measurement values, use the following values in the **Scaling** setting view:

- I_{01} CT primary: 470 A
- I_{01} CT secondary: 1 A
- Nominal I_{01} input: 0.2 A

Figure 193 - Scalings view for I_{01} input

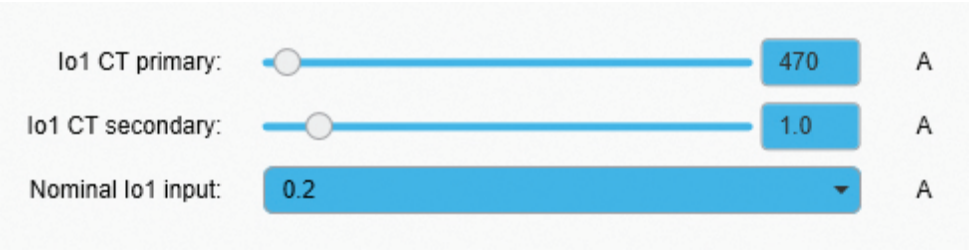

Lower scaling values

The device also allows selecting ten times lower scaling values. Set the values to:

- I_{01} CT primary: 47 A
- I_{01} CT secondary: 0.1 A
- Nominal I_{01} input: 0.2 A

The minimum setting for the primary current is then 0.005 x 47 A = 0,235 A.

Measuring specifications

When CSH120 or CSH200 is used with PowerLogic P3 protection devices the measuring range is 0.2 A–300 A of primary current. The minimum setting for primary current is 0.005xI_0 which in this case means 0.005 x 470 A = 2.35 A of primary current.

Figure 194 - Earth fault overcurrent setting view

8.4 Using CSH120 and CSH200 with C = I_{01} CSH (2 / 20 A) core balance CT input

General

The CSH120 and CSH200 core balance CTs are dedicated accessories for Schneider Electric's specially designed devices. They are used for direct earth fault overcurrent measurement. The only difference between them is the diameter. Because of their low-voltage insulation, they can only be used on cables.

Settings in the PowerLogic P3 protection device

When CSH120 or CSH200 is connected to an PowerLogic P3 protection device, to secure correct operation of the protection functions and measurement values, use the following values in the **Scaling** setting view:

In the PowerLogic P3 Standard device, the CSH input can only be configured for I_{01}. In this case, two primary windings are used to select the nominal input range: 2 A or 20 A.

Figure 195 - Example of the scaling I_{01} CSH primary: 2 A

Figure 196 - Example of the scaling I_{01} CSH primary: 20 A

Measuring specifications

When CSH120 or CSH200 is used with PowerLogic P3 protection devices, the measuring range is 0.02–42 x I_N, where I_N is either 2A or 20A in primary. The minimum earth fault setting range is 0.05 to 8 x I_N.

Two primary windings are used to select the nominal input range 2 A or 20 A. Set the device parameter I_{01} CSH primary to 20 A or 2 A.

If I_{01} CSH primary = 2 A, the minimum setting for primary current is then 0.05 x 2 A = 0.10 A and highest setting 8 x 2 = 16 A.

If I_{01} CSH primary = 20 A, the minimum setting for primary current is then 0.05 x 20 A = 1.00 A and highest setting 8 x 20 = 160 A.

Figure 197 - Earth fault overcurrent setting view when I_{01} CSH primary = 2 A

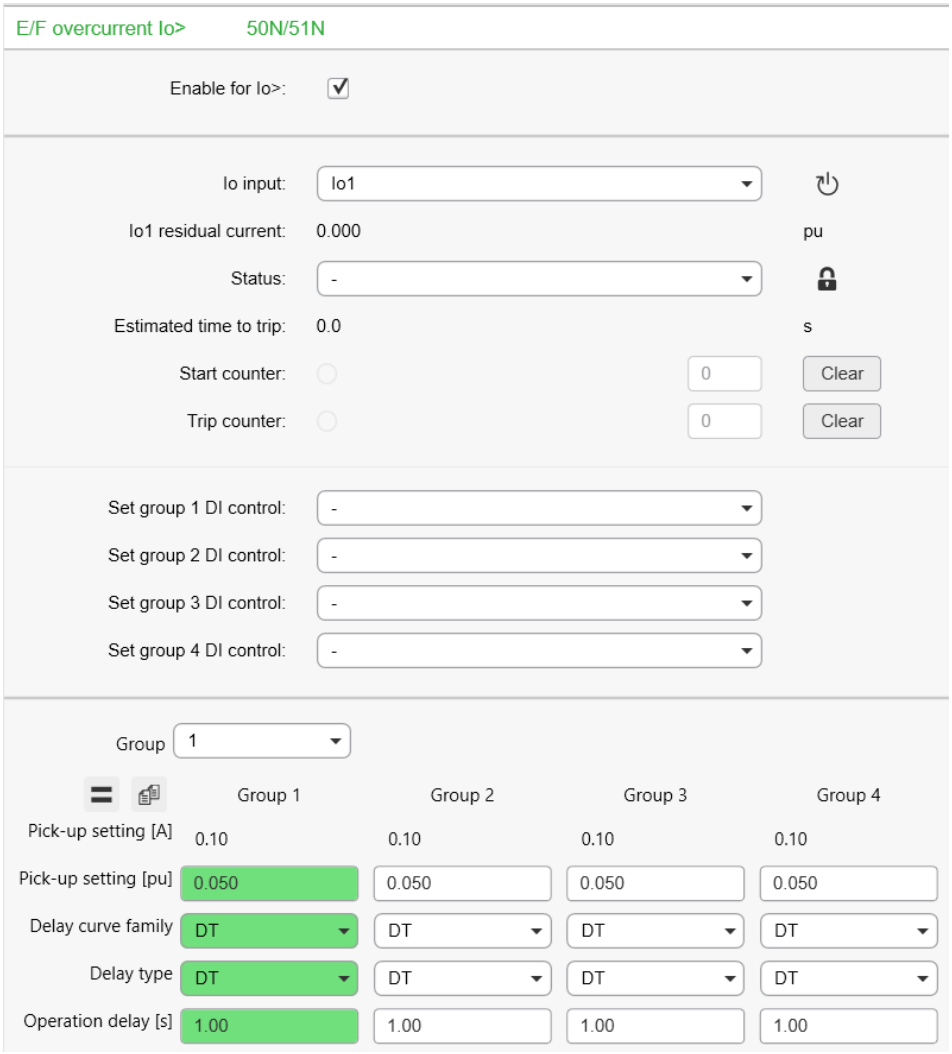

9 Installation

9.1 Safety in installation

This page contains important safety instructions that must be followed precisely before attempting to install, repair, service or maintain electrical equipment. Carefully read and follow the safety instructions described below. Only qualified personnel, equipped with appropriate individual protection equipment, may work on or operate the equipment. Qualified personnel are individuals who:

- are familiar with the installation, commissioning, and operation of the equipment and of the system to which it is being connected.
- are able to safely perform switching operations in accordance with accepted safety engineering practices and are authorised to energize and de-energize equipment and to isolate, ground, and label it.
- are trained in the care and use of safety apparatus in accordance with safety engineering practices.
- are trained in emergency procedures (first aid).

⚠⚠ DANGER

HAZARD OF ELECTRIC SHOCK, EXPLOSION, OR ARC FLASH BEFORE PERFORMING ANY INTERVENTION:

- Turn off all power supplying the protection device and the equipment in which it is installed before working on it.
- Always use a properly rated voltage sensing device to confirm that power is off.
- Replace all devices, doors, and covers before turning on power to this equipment.
- Apply appropriate personal protective equipment and follow safe electrical work practices. See local regulation.
- Do not install this product in ATEX class 0, 1 and 2 areas.

Failure to follow this instruction will result in death or serious injury.

⚠ DANGER

HAZARD OF FIRE

Insufficient tightening causes high contact resistance and overheat with current, in extreme cases, even loose and ineffective connections and fire hazard. Tighten all the electric connections with specified torque.

Failure to follow these instructions will result in death or serious injury.

⚠ WARNING

HAZARD OF UNEXPECTED OPERATION

Do not energize the primary circuit before this protection relay is properly configured.

Failure to follow these instructions can result in death, serious injury, or equipment damage.

⚠ CAUTION

HAZARD OF FIRE, DAMAGE TO ELECTRONICS OR MALFUNCTION

If you are authorized to withdraw the relay:

- Disconnect the power supply before removing or replacing a module or the withdrawable part of the protection relay.
- Never touch electronic parts (electrostatic discharge).
- Before replacing the withdrawable part, visually check the cleanliness and if there are any foreign objects in the case, the withdrawable part and the connectors.

Failure to follow these instructions can result in injury or equipment damage.

Protection Class I equipment

Before energizing the equipment it must be grounded using the protective conductor terminal, if provided, or the appropriate termination of the supply plug in the case of plug connected equipment.

The protective conductor (ground) connection must not be removed since the protection against electric shock provided by the equipment would be lost.

When the protective (ground) conductor terminal (PCT) is also used to terminate cable screens, etc., it is essential that the integrity of the protective (ground) conductor is checked after the addition or removal of such functional ground connections. For M4 stud PCTs the integrity of the protective (ground) connections should be ensured by use of a locknut or similar.

The recommended minimum protective conductor (ground) wire size is 2.5 mm² (AWG 14) (3.3 mm² (AWG 12) for North America) unless otherwise stated in the technical data section of the equipment documentation, or otherwise required by local or country wiring regulations.

The protective conductor (ground) connection must be low-inductance and as short as possible. All connections to the equipment must have a defined potential. Connections that are pre-wired, but not used, should preferably be grounded when binary inputs and output relays are isolated. When binary inputs and output relays are connected to common potential, the pre-wired but unused connections should be connected to the common potential of the grouped connections.

NOTE: Use only copper conductors with minimum 75°C rating.

9.2 Checking the consignment

Check that the unit packaging and the seal are intact at the receipt of the delivery. Our products leave the factory in closed, sealed packaging. If the transport packaging is open or the seal is broken, the confidentiality and authenticity of the information contained in the products cannot be ensured.

9.3 Product identification

Each PowerLogic P3 relay is delivered in a separate package containing:

- PowerLogic P3 protection relay with the necessary terminal connectors
- Production testing certificate
- Quick Start manual

Optional accessories are delivered in separate packages.

To identify a PowerLogic P3 protection relay, see the labels on the package and on the side of the relay.

Serial number label

Figure 198 - P3U Serial number label

1. Rated voltage U_n
2. Rated frequency f_n
3. Rated phase current I_n
4. Rated earth fault current I_{0n}
5. Power consumption P_{max}
6. Power supply operating range U_{aux}
7. Order code
8. Serial number
9. Manufacturing date
10. MAC address for TCP/IP communication
11. Short order code
12. Production identification

Unit package label

Figure 199 - P3U Unit package label

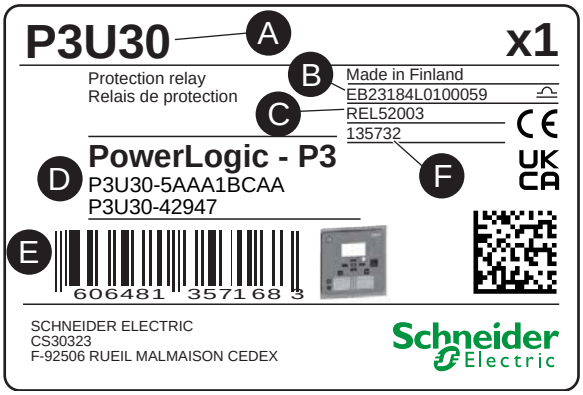

A. Product name
B. Serial number
C. Short order code
D. Order code
E. EAN13 bar code
F. Internal product code

9.4 Storage

Store the relay in its original packaging in a closed, sheltered location with the following ambient conditions:

- ambient temperature: -40 °C to +70 °C (or -40 °F to +158 °F)
- humidity < 90 %.

Check the ambient conditions and the packaging yearly.

9.5 Mounting

⚠⚠ DANGER

HAZARD OF ELECTRIC SHOCK, EXPLOSION, OR ARC FLASH

- Wear your personal protective equipment (PPE) and comply with the safe electrical work practices. For clothing refer applicable local standards.
- Only qualified personnel should install this equipment. Such work should be performed only after reading this entire set of instructions and checking the technical characteristics of the device.
- NEVER work alone.
- Turn off all power supplying this equipment before working on or inside it. Consider all sources of power, including the possibility of backfeeding.
- Always use a properly rated voltage sensing relay to ensure that all power is off.
- Do not open the secondary circuit of a live current transformer.
- Connect the device's protective ground to functional earth according to the connection diagrams presented in this document.

Failure to follow this instruction will result in death or serious injury.

NOTE: The length of the earthing cable should be as minimal as possible.

Figure 200 - Panel mounting

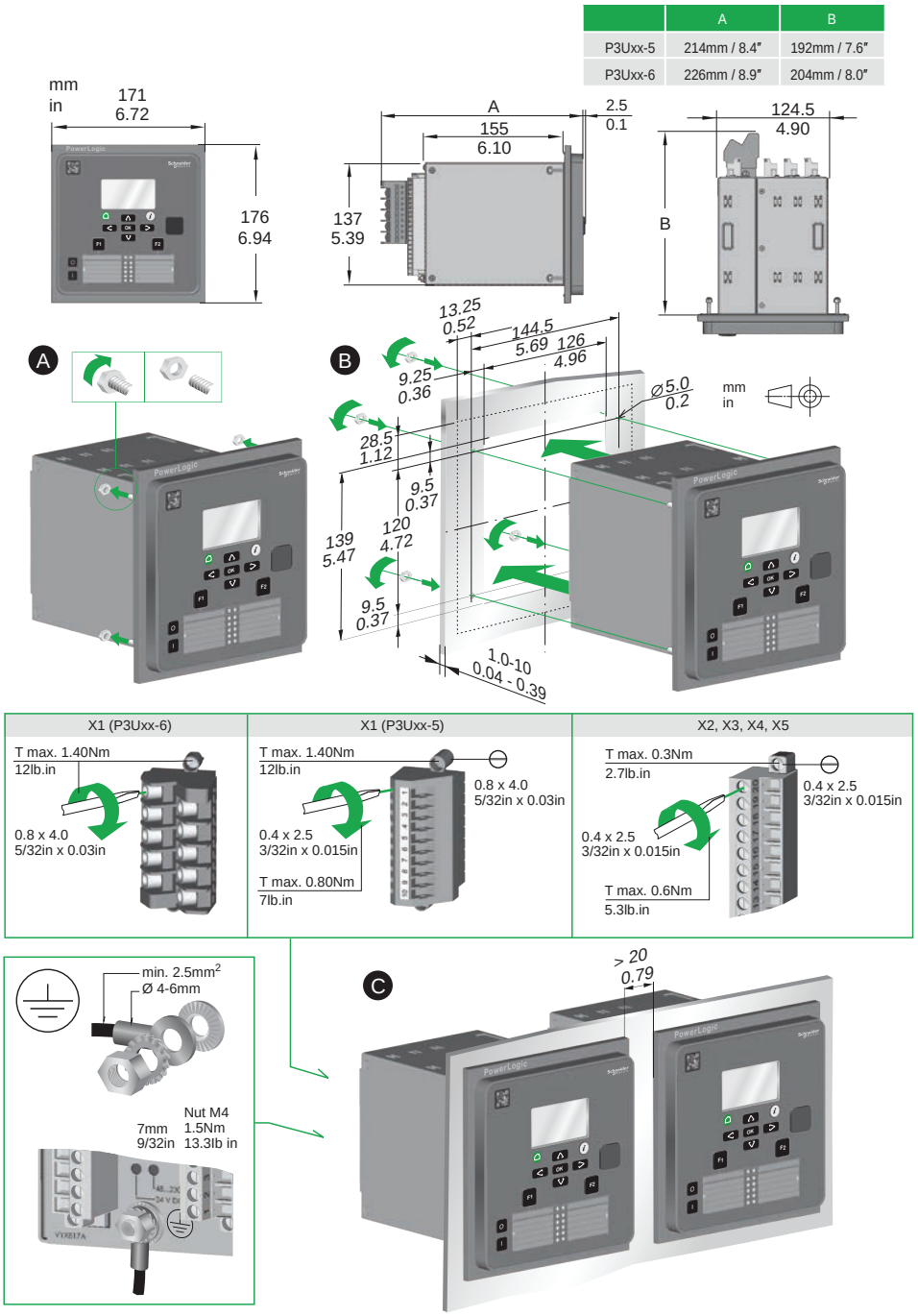

	A	B
P3Uxx-5	214mm / 8.4"	192mm / 7.6"
P3Uxx-6	226mm / 8.9"	204mm / 8.0"

Figure 201 - Panel mounting with the raising frame REL52834

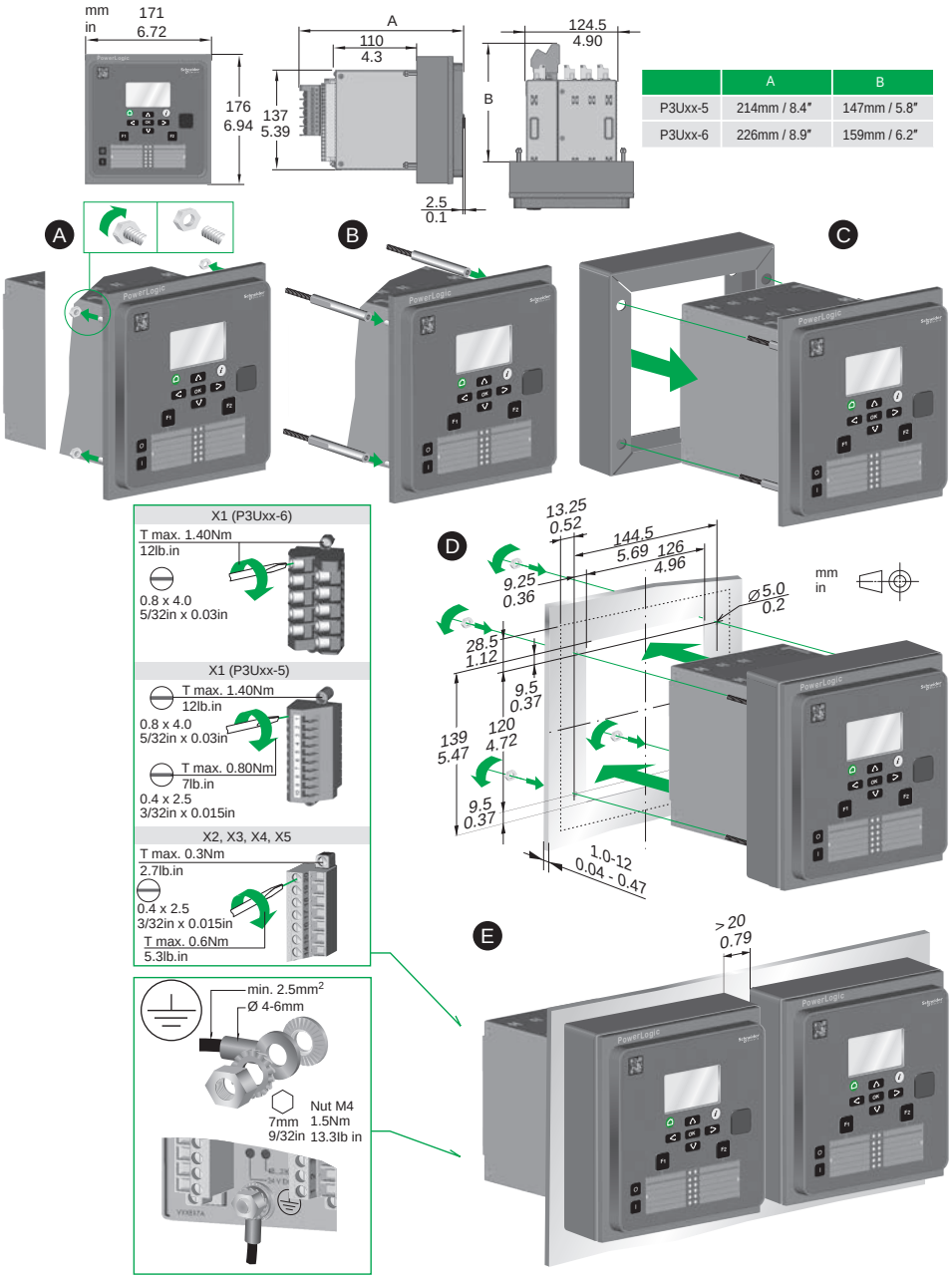

	A	B
P3Uxx-5	214mm / 8.4"	147mm / 5.8"
P3Uxx-6	226mm / 8.9"	159mm / 6.2"

⚠ CAUTION

HAZARD OF CUTS

- Trim the edges of the cut-out plates to remove any jagged edges.
- Use protective gloves when moving and mounting the device.

Failure to follow these instructions can result in injury.

Figure 202 - Example of the P3U alarm facial label insertion

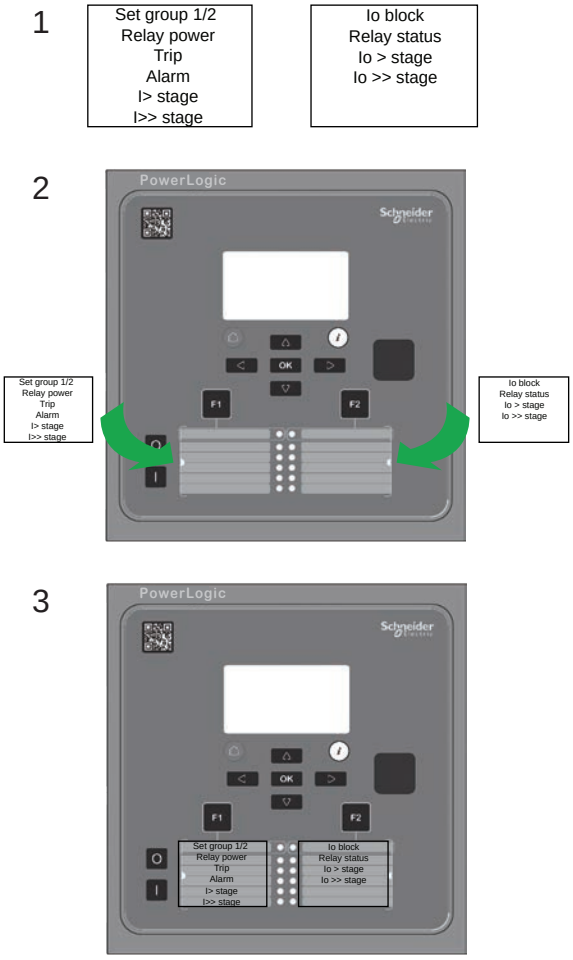

See "P3 Standard Series facial label instruction" document for more information.

Protective film

NOTICE
PERMANENT RELAY DAMAGE Remove the protective film after mounting the relay. **Failure to follow these instructions can result in equipment damage.**

NOTE: The display of the protective relay is plastic and can melt if exposed to high temperatures or intensive sunlight.

9.6 Connections

NOTE: The figures show the relay outputs with the auxiliary power on and the protection functions on standby mode.

NOTE: Digital inputs are polarity-free, which means that you can freely choose "-" and "+" terminals for each digital input.

9.6.1 Rear panel

Figure 203 - Pluggable Clamp 2xLC P3Uxx-5AAA3BDA

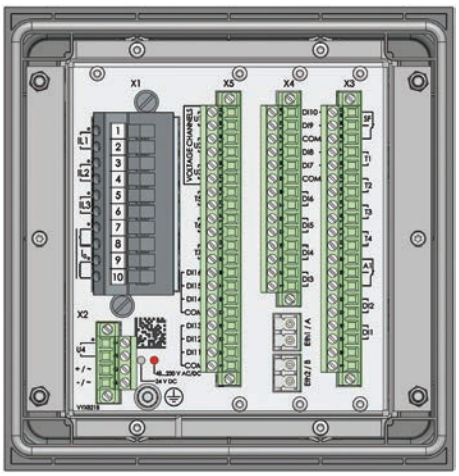

Figure 204 - Pluggable Clamp RJ45 ETH_RS232 without X2-X5 connectors P3Uxx-5ABA1BEA

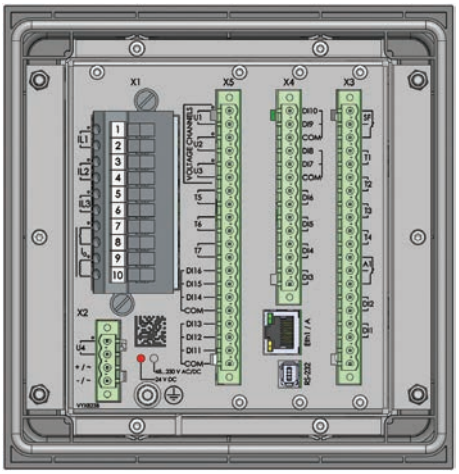

Terminal X1 connections

The PowerLogic P3U20 and P3U30 relays have two alternative pluggable current input terminals containing automatic short circuiting if the terminal is removed from its relay socket. Order option 5 has screw clamp terminals and option 6 ring lug screw terminals.

Table 139 - Terminal X1 connections

-	**Phase current connection pins / input polarity / nominal secondary current**		**5 and 7 = Pluggable clamp / 6 and 8 = Pluggable ring lug**
	1	I_{L1} (S1)	5/1 A[100)]
	2	I_{L1} (S2)	
	3	I_{L2} (S1)	

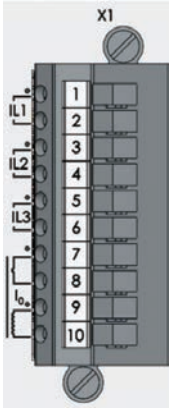	4	I_{L2} (S2)			
	5	I_{L3} (S1)			
	6	I_{L3} (S2)			
	Earth fault overcurrent current connection pins / input polarity / nominal secondary current		**A = 1/5 A**	**B = 0.2/1 A**	**C = CSH 2/20 A**
	7	I_0 (S1)	5 A	1 A	20 A
	8	I_0 (S2)			
	9	I_0 (S1)	1 A	0.2 A	2 A
	10	I_0 (S2)			

[100)] Nominal secondary phase current can be scaled to 1-10A

NOTE: Connect the earth fault overcurrent I_0 either to terminal pins 7–8 or 9–10 as the relay has only one I_0 input channel.

Figure 205 - Option 5: Pluggable clamp connector

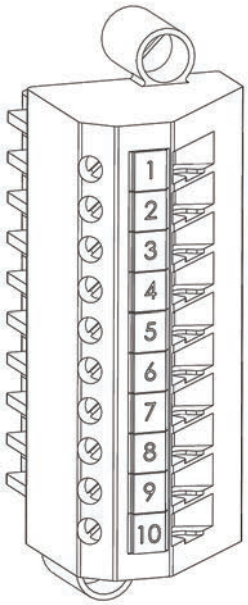

Figure 206 - Option 6: Pluggable ring lug connector

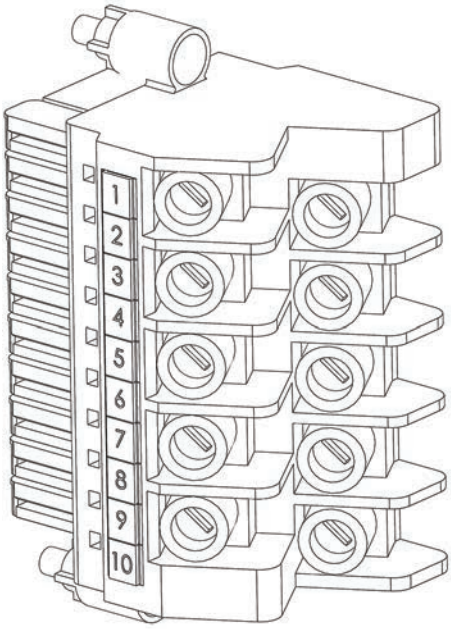

Terminal X1 and X2 connections – LPIT

Figure 207 - P3U real panel – LPIT

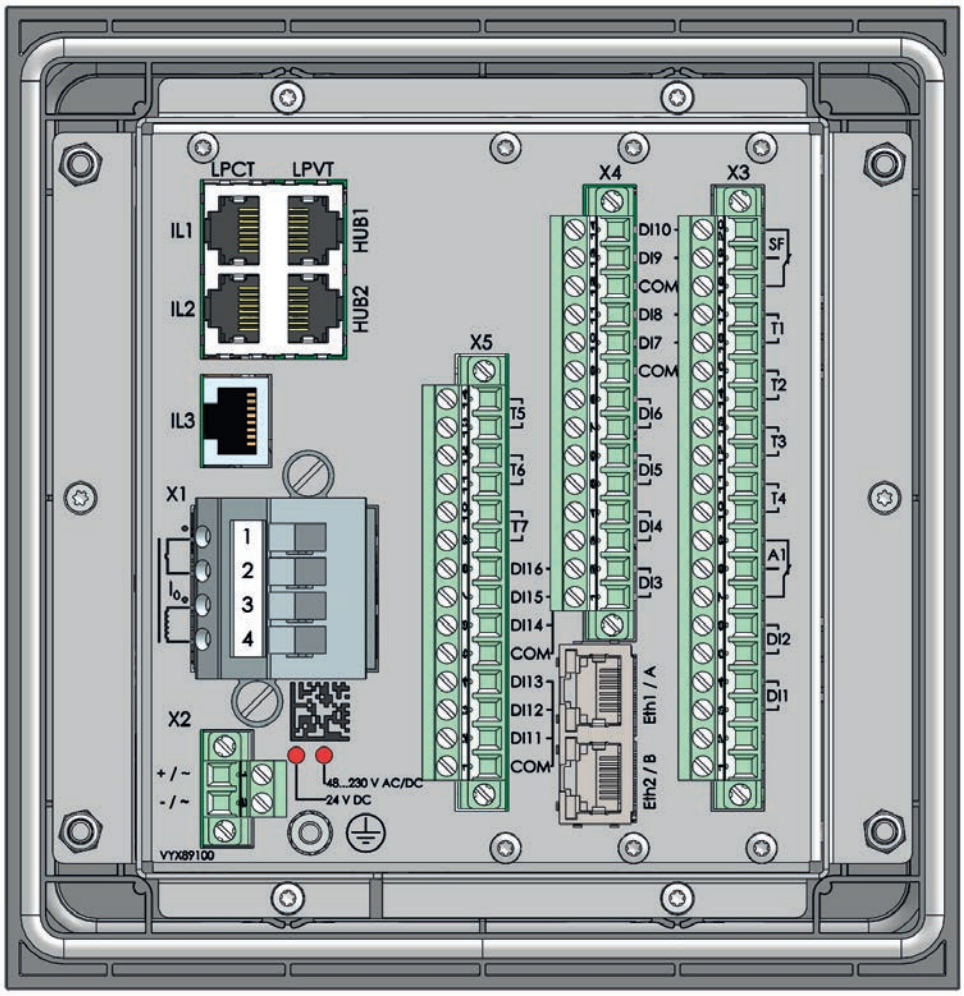

Table 140 - Terminal pins for LPCT and LPVT interfaces

Connector / Pin no.	Symbol	Description
I_{L1}	I_{L1}	LPCT sensor L1
I_{L2}	I_{L2}	LPCT sensor L2
I_{L3}	I_{L3}	LPCT sensor L3
HUB1	U_{LL}/U_{LN}	Interface for LPVT HUB1 for connecting LPVT sensors U1–U3
HUB2	$U_0/U_{LL}/U_{LN}$	Interface for LPVT HUB2 for connecting LPVT sensors U4–U5

Table 141 - Terminal X1 connections

	Phase current connection pins / input polarity / nominal secondary current		**5 and 7 = Pluggable clamp / 6 and 8 = Pluggable ring lug**		
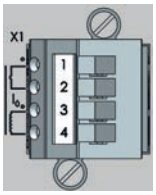	**Earth fault overcurrent current connection pins / input polarity / nominal secondary current**		**A = 1/5 A**	**B = 0.2/1 A**	**C = CSH 2/20 A**
	1	I_0 (S1)	5 A	1 A	20 A
	2	I_0 (S2)			
	3	I_0 (S1)	1 A	0.2 A	2 A
	4	I_0 (S2)			

Table 142 - Terminal X2 connections (LPCT/LPVT)

	No.	**Symbol**	**Description**
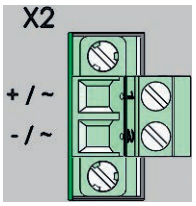	1	+ / ~	Auxiliary voltage
	2	- / ~	Auxiliary voltage

Terminal X2 connections (CT/VT)

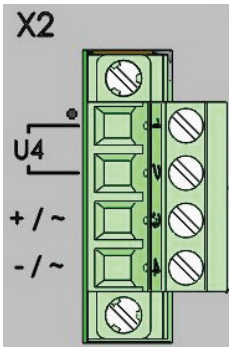	No	Symbol	Description
	1	U_4	Uo/ULN/ULL (da/a/a)
	2	U_4	Uo/ULN/ULL (dn/n/b)
	3	+ / ~	Auxiliary voltage
	4	- / ~	Auxiliary voltage

Terminal X3 connections

-	No	Symbol	Description
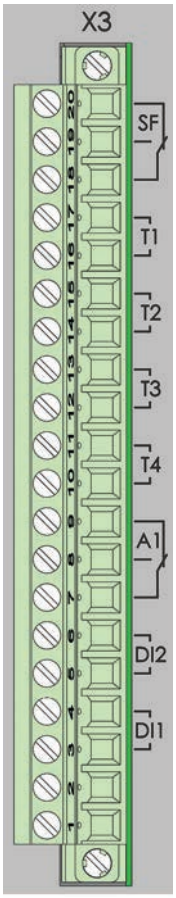	20	SF NC	Self-diagnostic relay, normal close when power ON
	19	SF NO	
	18	SF COM	Self-diagnostic relay, normal open when power ON
	17	T1	
	16	T1	
	15	T2	Self-diagnostic relay, common terminal
	14	T2	
	13	T3	Trip relay 1
	12	T3	Trip relay 1
	11	T4	Trip relay 2
	10	T4	Trip relay 2
	9	A1 NC	Trip relay 3
	8	A1 NO	Trip relay 3
	7	A1 COM	Trip relay 4
	6	DI2	Trip relay 4
	5	DI2	Alarm relay 1, normal closed terminal
	4	DI1	
	3	DI1	Alarm relay 1, normal open
	2	-	
	1	-	Alarm relay 1, common
			Digital input 2
			Digital input 2
			Digital input 1
			Digital input 1
			No connection
			No connection

⚠ CAUTION

RISK OF DESTRUCTION OF THE RELAY

Do not invert the connectors X3, X4 and X5.

Failure to follow these instructions can result in equipment damage.

Terminal X4 with RS-485 communication, B = RS-485 + 8DI

Available in the P3U20 and P3U30 devices

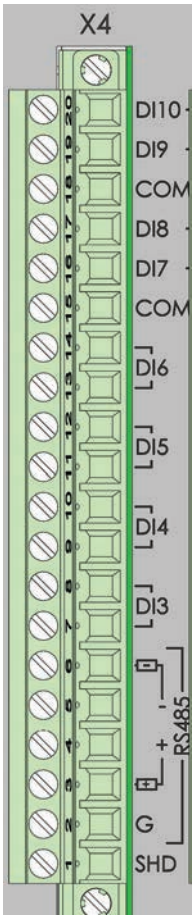

No	Symbol	Description
20	DI10	Digital input 10
19	DI9	Digital input 9
18	COM	Common for digital inputs 9–10
17	DI8	Digital input 8
16	DI7	Digital input 7
15	COM	Common for digital inputs 7–8
14	DI6	Digital input 6
13	DI6	Digital input 6
12	DI5	Digital input 5
11	DI5	Digital input 5
10	DI4	Digital input 4
9	DI4	Digital input 4
8	DI3	Digital input 3
7	DI3	Digital input 3
6	RS-485 term	RS-485 interface termination resistor for “-“ connection
5	RS-485 -	RS-485 interface “-“ connection
4	RS-485 +	RS-485 interface “+“ connection
3	RS-485 term	RS-485 interface termination resistor for “+“ connection
2	RS-485 G	RS-485 interface ground terminal
1	RS-485 SHD	RS-485 interface cable shield connection

NOTE: Interconnect 3 & 4 and 5 & 6 when termination is needed.

⚠ CAUTION

RISK OF DESTRUCTION OF THE RELAY

Do not invert the connectors X3, X4 and X5.

Failure to follow these instructions can result in equipment damage.

Figure 208 - RS-485 multidrop connections

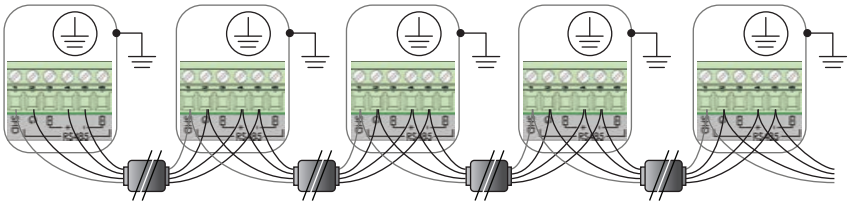

Terminal X4 with ethernet communication, C = 2 x RJ-45 + 8DI

Available in the P3U20 and P3U30 devices

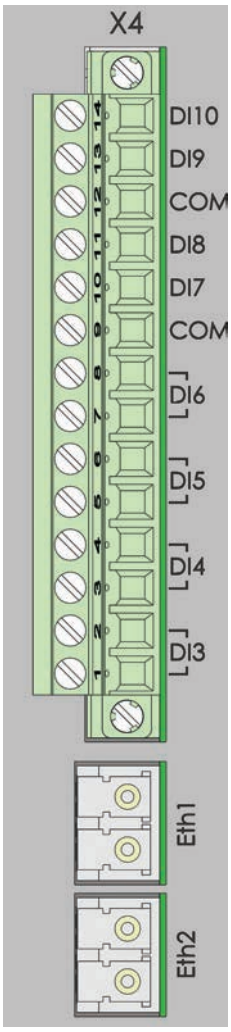

No	Symbol	Description
14	DI10	Digital input 10
13	DI9	Digital input 9
12	COM	Common for digital inputs 9–10
11	DI8	Digital input 8
10	DI7	Digital input 7
9	COM	Common for digital inputs 7–8
8	DI6	Digital input 6
7	DI6	Digital input 6
6	DI5	Digital input 5
5	DI5	Digital input 5
4	DI4	Digital input 4
3	DI4	Digital input 4
2	DI3	Digital input 3
1	DI3	Digital input 3

⚠ CAUTION

RISK OF DESTRUCTION OF THE RELAY

Do not invert the connectors X3, X4 and X5.

Failure to follow these instructions can result in equipment damage.

Terminal X4 with optical ethernet communication, D = 2 x LC + 8DI

Terminal X4 with optical ethernet communication, D = 2 x LC + 8DI

Available in the P3U20 and P3U30 devices

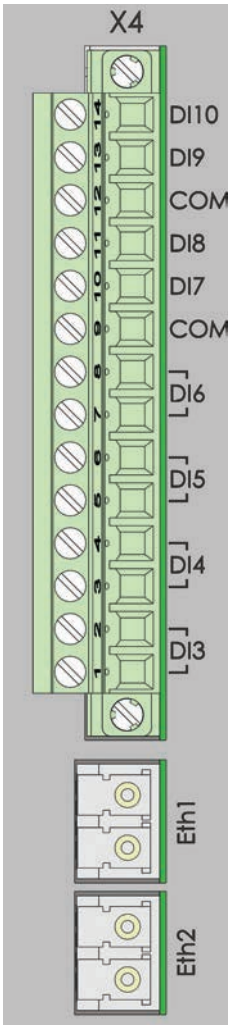

No	Symbol	Description
14	DI10	Digital input 10
13	DI9	Digital input 9
12	COM	Common for digital inputs 9–10
11	DI8	Digital input 8
10	DI7	Digital input 7
9	COM	Common for digital inputs 7–8
8	DI6	Digital input 6
7	DI6	Digital input 6
6	DI5	Digital input 5
5	DI5	Digital input 5
4	DI4	Digital input 4
3	DI4	Digital input 4
2	DI3	Digital input 3
1	DI3	Digital input 3

⚠ CAUTION

RISK OF DESTRUCTION OF THE RELAY

Do not invert the connectors X3, X4 and X5.

Failure to follow these instructions can result in equipment damage.

Terminal X4 with ethernet and RS-232 communication, E = RJ + 232 + 8DI with IRIG-B

Available in the P3U20 and P3U30 devices

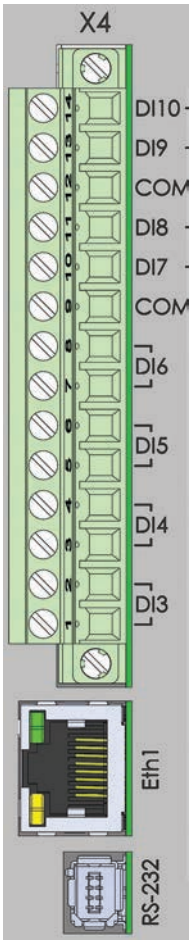

No	Symbol	Description
14	DI10	Digital input 10
13	DI9	Digital input 9
12	COM	Common for digital inputs 9–10
11	DI8	Digital input 8
10	DI7	Digital input 7
9	COM	Common for digital inputs 7–8
8	DI6	Digital input 6
7	DI6	Digital input 6
6	DI5	Digital input 5
5	DI5	Digital input 5
4	DI4	Digital input 4
3	DI4	Digital input 4
2	DI3	Digital input 3
1	DI3	Digital input 3

⚠ CAUTION

RISK OF DESTRUCTION OF THE RELAY

Do not invert the connectors X3, X4 and X5.

Failure to follow these instructions can result in equipment damage.

Terminal X4 with optical ethernet and RS-232 communication, F= LC + 232 + 8DI with IRIG-B

Available in the P3U20 and P3U30 devices

Ethernet LC fiber and RS-232 serial interfaces

Cable VX082, VX083 or VX084 is needed for connecting external option modules to the RS-232 connector of the PowerLogic P3U20 and P3U30.

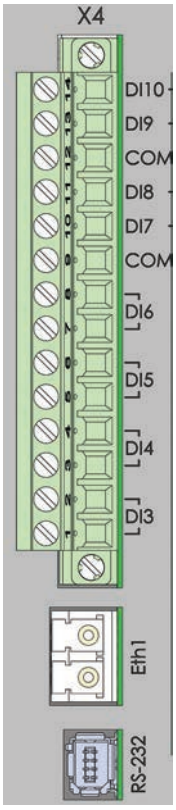

No	Symbol	Description
14	DI10	Digital input 10
13	DI9	Digital input 9
12	COM	Common for digital inputs 9–10
11	DI8	Digital input 8
10	DI7	Digital input 7
9	COM	Common for digital inputs 7–8
8	DI6	Digital input 6
7	DI6	Digital input 6
6	DI5	Digital input 5
5	DI5	Digital input 5
4	DI4	Digital input 4
3	DI4	Digital input 4
2	DI3	Digital input 3
1	DI3	Digital input 3

⚠ CAUTION

RISK OF DESTRUCTION OF THE RELAY

Do not invert the connectors X3, X4 and X5.

Failure to follow these instructions can result in equipment damage.

Terminal X4 with RS-485 communication, G = RS-485 + 6DI + 3DO

Available in the P3U20 device

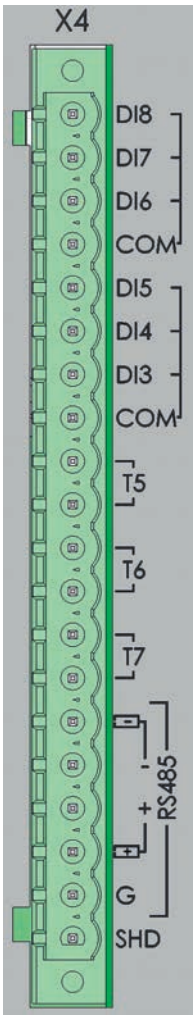

No	Symbol	Description
20	DI8	Digital input 8
19	DI7	Digital input 7
18	DI6	Digital input 6
17	COM	Common for digital inputs 6–8
16	DI5	Digital input 5
15	DI4	Digital input 4
14	DI3	Digital input 3
13	COM	Common for digital inputs 3–5
12	T5	Trip relay 5
11	T5	Trip relay 5
10	T6	Trip relay 6
9	T6	Trip relay 6
8	T7	Trip relay 7
7	T7	Trip relay 7
6	RS-485 term	RS-485 interface termination resistor for “-“ connection
5	RS-485 -	RS-485 interface “-“ connection
4	RS-485 +	RS-485 interface “+“ connection
3	RS-485 term	RS-485 interface termination resistor for “+“ connection
2	RS-485 G	RS-485 interface ground terminal
1	RS-485 SHD	RS-485 interface cable shield connection

NOTE: Interconnect 3 & 4 and 5 & 6 when termination is needed.

⚠ CAUTION

RISK OF DESTRUCTION OF THE RELAY

Do not invert the connectors X3, X4 and X5.

Failure to follow these instructions can result in equipment damage.

Figure 209 - RS-485 multidrop connections

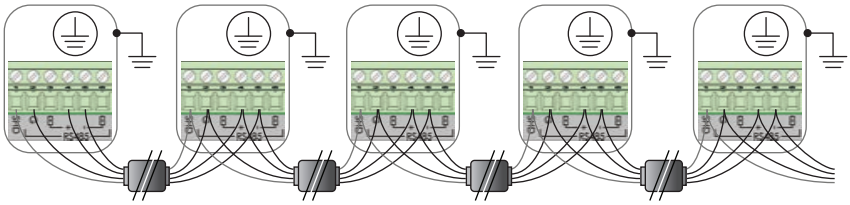

Terminal X4 with ethernet communication, H = 2 x RJ-45 + 6DI + 3DO

Available in the P3U20 device

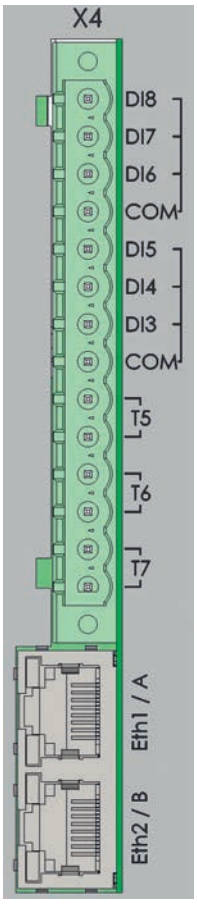

No	Symbol	Description
14	DI8	Digital input 8
13	DI7	Digital input 7
12	DI6	Digital input 6
11	COM	Common for digital inputs 6–8
10	DI5	Digital input 5
9	DI4	Digital input 4
8	DI3	Digital input 3
7	COM	Common for digital inputs 3–5
6	T5	Trip relay 5
5	T5	Trip relay 5
4	T6	Trip relay 6
3	T6	Trip relay 6
2	T7	Trip relay 7
1	T7	Trip relay 7

⚠ CAUTION

RISK OF DESTRUCTION OF THE RELAY

Do not invert the connectors X3, X4 and X5.

Failure to follow these instructions can result in equipment damage.

Terminal X4 with optical ethernet communication, I = 2 x LC + 6DI + 3DO

Available in the P3U20 device

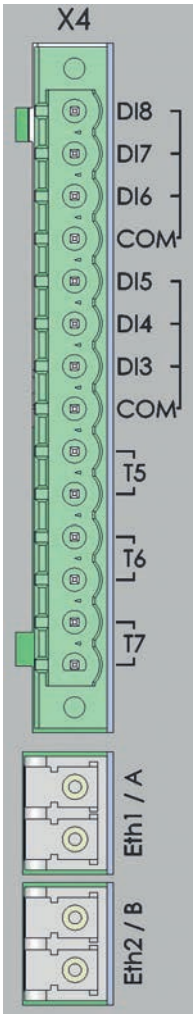

No	Symbol	Description
14	DI8	Digital input 8
13	DI7	Digital input 7
12	DI6	Digital input 6
11	COM	Common for digital inputs 6–8
10	DI5	Digital input 5
9	DI4	Digital input 4
8	DI3	Digital input 3
7	COM	Common for digital inputs 3–5
6	T5	Trip relay 5
5	T5	Trip relay 5
4	T6	Trip relay 6
3	T6	Trip relay 6
2	T7	Trip relay 7
1	T7	Trip relay 7

⚠ CAUTION

RISK OF DESTRUCTION OF THE RELAY

Do not invert the connectors X3, X4 and X5.

Failure to follow these instructions can result in equipment damage.

Terminal X5 B = 3U (100/110V) + 6DI + 3DO

Available in the P3U30 device

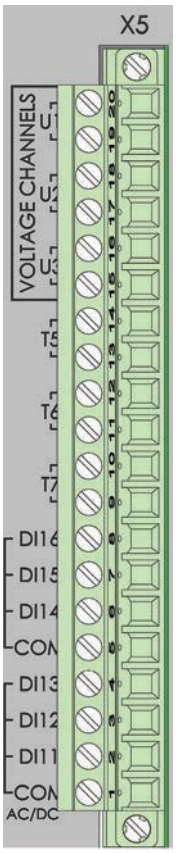

No.	Symbol if B, C, D, E or F option in X4 terminal	Description if B, C, D, E or F option in X4 terminal
20	U1	ULN/ULL (a/a)
19	U1	ULN/ULL (n/b)
18	U2	ULN/ULL (a/a)
17	U2	ULN/ULL (n/b)
16	U3	Uo/ULN/ULL (da/a/a)
15	U3	Uo/ULN/ULL (dn/n/b)
14	T5	Trip relay 5
13	T5	Trip relay 5
12	T6	Trip relay 6
11	T6	Trip relay 6
10	T7	Trip relay 7
9	T7	Trip relay 7
8	DI 16	Digital input 16
7	DI 15	Digital input 15
6	DI 14	Digital input 14
5	COM	Common for digital inputs 14–16
4	DI 13	Digital input 13
3	DI 12	Digital input 12
2	DI 11	Digital input 11
1	COM	Common for digital inputs 11–13

Available in the P3U30 device

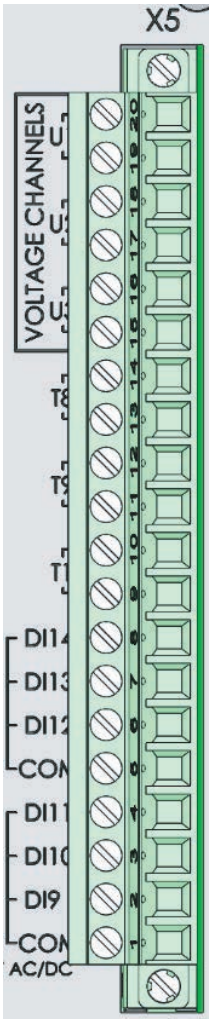

No.	Symbol if G, H or I option in X4 terminal	Description if G, H or I option in X4 terminal
20	U1	ULN/ULL (a/a)
19	U1	ULN/ULL (n/b)
18	U2	ULN/ULL (a/a)
17	U2	ULN/ULL (n/b)
16	U3	Uo/ULN/ULL (da/a/a)
15	U3	Uo/ULN/ULL (dn/n/b)
14	T8	Trip relay 8
13	T8	Trip relay 8
12	T9	Trip relay 9
11	T9	Trip relay 9
10	T10	Trip relay 10
9	T10	Trip relay 10
8	DI 14	Digital input 14
7	DI 13	Digital input 13
6	DI 12	Digital input 12
5	COM	Common for digital inputs 12–14
4	DI 11	Digital input 11
3	DI 10	Digital input 10
2	DI 9	Digital input 9
1	COM	Common for digital inputs 9–11

⚠ CAUTION

RISK OF DESTRUCTION OF THE RELAY

Do not invert the connectors X3, X4 and X5.

Failure to follow these instructions can result in equipment damage.

Terminal X5 C = 6DI+3DO

Available in the P3U30 device

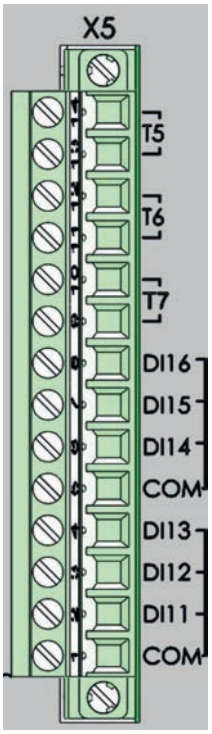

No.	Symbol if B, C, D, E or F option in X4 terminal	Description if B, C, D, E or F option in X4 terminal
14	T5	Trip relay 5
13	T5	Trip relay 5
12	T6	Trip relay 6
11	T6	Trip relay 6
10	T7	Trip relay 7
9	T7	Trip relay 7
8	DI 16	Digital input 16
7	DI 15	Digital input 15
6	DI 14	Digital input 14
5	COM	Common for digital inputs 14–16
4	DI 13	Digital input 13
3	DI 12	Digital input 12
2	DI 11	Digital input 11
1	COM	Common for digital inputs 11–13

⚠ CAUTION

RISK OF DESTRUCTION OF THE RELAY

Do not invert the connectors X3, X4 and X5.

Failure to follow these instructions can result in equipment damage.

9.6.2 Auxiliary voltage

⚠⚠ DANGER

HAZARD OF ELECTRIC SHOCK, EXPLOSION, OR ARC FLASH

Before connecting the devices, disconnect the supply voltage to the unit.

Failure to follow this instruction will result in death or serious injury.

The external auxiliary voltage U_{AUX} for the relay is connected to the pins X2: 3–4.

The voltage options are:

- Power A: 48 (-20%) – 240 (+10%) V ac/dc
- Power B: 24 V dc (-20% /+50%) or 24–48 (±20%) V dc

NOTE: The 24-48 (+/-20%) V dc power supply has been taken into use as follows:

Serial number	Date of extended power supply availability	Manufacturing location
SM202060281	18 May 2020	Riga, Latvia
WX210260005	16 Jan 2021	Wuxi, China

NOTE: Check the available power supply range from the device's serial number label.

NOTE: When an optional 24 V dc or 24-48 V dc power module is used, the polarity is as follows: X2:3 positive (+), X2:4 negative (-).

The rated frequency (ac) is 50/60 Hz and the AC frequency operating range is as follows:

- 50 Hz, ±10%
- 60 Hz, ±10%

NOTICE

LOSS OF PROTECTION OR RISK OF NUISANCE TRIPPING

- If the relay is no longer supplied with power or is in permanent fault state, the protection functions are no longer active and all the digital outputs are dropped out.
- Check that the operating mode and SF relay wiring are compatible with the installation.

Failure to follow these instructions can result in equipment damage and unwanted shutdown of the electrical installation.

9.6.3 Local port

The relay has a USB port in the front panel.

Protocol for the USB port

The front panel USB type B port is always using the command line protocol for eSetup Easergy Pro.

The speed of the interface is defined in the CONF/DEVICE SETUP menu via the front panel. The default settings for the relay are 187500.

Connecting a cable between the PC and the relay creates a virtual com-port. The fixed bit rate for the relay is 187500. The communication parameter display on the local display shows the active parameter values for the local port.

9.6.4 Connection data

Table 143 - Auxiliary voltage

	Type A (standard)	Type B (option)
Rated voltage U_{AUX}	48 (-20%) – 240 (+10%) V ac/dc 48/110/120/230 V ac 48/110/125/220 V dc Continuously: 39-265 V ac/dc	24 V dc (-20 %, +50 %) **Note! Polarity** X2:3= positive (+) X2:4= negative (-) Continuously: 19.2–36 V dc
		Type B (option)
		Note: Check the available power supply range from the device's serial number label. See *9.6.2 Auxiliary voltage* for details. 24–48 V dc (±20%) **Note! Polarity** X2:3= positive (+) X2:4= negative (-) Continuously: 20-57 V dc
Rated frequency (ac)	50 / 60 Hz	N/A
AC frequency operating range	50Hz, ±10%; 60Hz, ±10%	N/A
Start-up peak (dc) 110 V (Type A) 220 V (Type A)	25 A with time constant of 1000 µs 15 A with time constant of 500 µs 25 A with time constant of 750 µs	
Power consumption - Normal state[101)] - All digital outputs activated	 < 11 W < 15 W	

[101)] Power on, communications, measurements, display, LED's and SF output active.

Table 144 - Digital inputs technical data

Number of inputs	As per the order code Model: P3U30-xxxxxBxx: 16 Model: P3U20-xxxxxAxx: 10 Model: P3U20-xxxxxG/H/Ixx: 8
Voltage withstand	255 V ac/dc

Nominal operation voltage DI1 – DI16 (as per the order code digits)	1: 24–230 V ac/dc (max. 255 V ac/dc) 2: 110–230 V ac/dc (max. 255 V ac/dc) 3: 220–230 V ac/dc (max. 255 V ac/dc)
Typical switching threshold (as per order code digits)	1: 12 V dc 2: 75 V dc 3: 155 V dc **NOTE:** For trip circuit supervision with two digital inputs, select a lower switching threshold (24 V or 110 V).
Current drain	< 4 mA (typical approx. 3mA)
Cycle time	10 ms
Activation time dc/ac	< 11 ms / < 15 ms
Reset time dc/ac	< 11 ms / < 15 ms

NOTE: Set the dc/ac mode according to the used voltage in eSetup Easergy Pro.

Table 145 - Trip contact, Tx

Number of contacts	Model: P3U30-xxxxxBxx: 7 Model: P3U20-xxxxxAxx: 4 Model: P3U20-xxxxxxG/H/Ixx: 7
Rated voltage	250 V ac/dc
Continuous carry	5 A
Minimum making current	100 mA at 24 Vdc
Typical operation time	≤8 ms
Make and carry, 0.5 s Make and carry, 3 s	30 A 15 A
Breaking capacity, ac	2 000 VA
Breaking capacity, dc (L/R = 40 ms)	
at 48 V dc:	1.15 A
at 110 V dc:	0.5 A
at 220 V dc:	0.25 A
Contact material	Ag alloy

Table 146 - Signal contact, A1 and SF

Number of contacts:	1
Rated voltage	250 V ac/dc
Continuous carry	5 A
Breaking capacity, AC	2 000 VA
Minimum making current	100 mA at 24 V ac/dc
Make and carry, 0.5 s Make and carry, 3 s	30 A 15 A
Breaking capacity, ac	2 000 VA
Breaking capacity, dc (L/R = 40 ms)	
at 48 V dc:	1 A
at 110 V dc:	0.3 A
at 220 V dc:	0.15 A
Contact material	Ag alloy

Table 147 - Connection terminal tightening torque

Terminal characteristics	**X1**	**X2**	**X3**	**X4**	**X5**
Pluggable clamp connector					
Wire cross section, mm^2 (AWG)	6 (10)	2.5 (13 - 14)	2.5 (13 - 14)	2.5 (13 - 14)	2.5 (13 - 14)
Maximum wiring screw tightening torque Nm (lb-in)	0.8 (7)	0.5–0.6 (4.4–5.3)	0.5–0.6 (4.4–5.3)	0.5 - 0.6 (4.4 – 5.3)	0.5 - 0.6 (4.4 – 5.3)
Maximum connector retention tightening torque Nm (lb-in)	1 (8.5)	0.34 (3)	0.34 (3)	0.34 (3)	0.34 (3)
Wire type	Single strand or stranded with insulated crimp terminal				
Pluggable ring lug connector					

Terminal characteristics	**X1**	**X2**	**X3**	**X4**	**X5**
Ring lug width (mm) and screw size	10.0, M4				
Maximum wire cross section if directly mounted under screw, mm^2 (AWG)	2.5 (14)				
Maximum wiring screw tightening torgue Nm (Ib-in)	1.5 Nm (13)				
Maximum connector retention screw tightening torque Nm (Ib-in)	1.4 (12)				
Wire type	Single strand or stranded with insulated crimp terminal				

Table 148 - Serial communication port

Number of physical ports	0–1 on rear panel (option)
Electrical connection	RS-232 (option, IRIG-B included) RS-485 (option) Profibus (option, external module) Glass fibre connection (option, external module)
Protocols	Modbus RTU, master Modbus RTU, slave Spabus, slave IEC 60870-5-103 IEC 61870-5-101 Profibus DP DNP 3.0 IRIG-B

Table 149 - Ethernet communication port

Number of ports	0 or 2 on rear panel (option)
Electrical connection	RJ-45 10/100 Mbps (option)
Protocols	IEC 61850 Modbus TCP DNP 3.0 Ethernet/IP IEC 61870-5-101

Table 150 - Fiber Ethernet communication port

Number of ports	0 or 2 on rear panel (option)
Connection type	LC 100 Mbps
Optical characteristics	Operates with 62.5/125 µm and 50/125 µm multimode fiber Center Wavelength: 1300 nm typical Output Optical Power: • Fiber: 62.5/125 µm, NA = 0.275 23.0 dBm • Fiber: 50/125 µm, NA = 0.20 26.0 dBm Input Optical Power: -31 dBm

Maximum range	2 km (6561.68 ft)
Protocols	IEC 61850 Modbus TCP DNP 3.0 Ethernet/IP IEC 61870-5-101

Table 151 - Measuring circuits – standard CT/VT inputs

Phase current inputs	
Rated phase current	5 A (configurable for CT secondaries 1–10 A)
- Current measuring range	0.05–250 A
- Thermal withstand	• 20 A (continuously) • 100 A (for 10 s) • 500 A (for 1 s) • 1250 A (for 10 ms)
- Burden	0.075 VA
- Impedance	0.003 Ohm
I_0 input (5 A)	
Rated earth fault overcurrent	5 A (configurable for CT secondaries 0.1–10 A)
- Current measuring range	0.015–50 A
- Thermal withstand	• 20 A (continuously) • 100 A (for 10 s) • 500 A (for 1 s)
- Burden	0.075 VA
- Impedance	0.003 Ohm
I_0 input (1 A)	
Rated earth fault overcurrent	1 A (configurable for CT secondaries 0.1–10.0 A)
- Current measuring range	0.003–10 A
- Thermal withstand	• 4 A (continuously) • 20 A (for 10 s) • 100 A (for 1 s)
- Burden	0.02 VA
- Impedance	0.02 Ohm
I_0 input (0.2 A)	

Rated earth fault overcurrent	0.2 A (configurable for CT secondaries 0.1–10.0 A)
- Current measuring range	0.0006–2 A
- Thermal withstand	• 0.8 A (continuously) • 4 A (for 10 s) • 20 A (for 1 s)
- Burden	0.02 VA
- Impedance	0.02 Ohm
I_N input (CSH = 20 A/2 A)	
Rated ground fault current	20 A or 2 A
- Current measuring range	0.02–42 I_N
- Thermal withstand	• 300 A (continuously) • 18000 A (for 1 s)
- Burden	<10 mVA for 20 A input <2 mVA for 2 A input
Voltage inputs	
Rated voltage U_N	100 V (configurable 50–250 V)
- Voltage measuring range[102)]	0.5–190 V
- Thermal withstand	• 250 V (continuously) • 600 V (for 10 s)
- Burden	<0.015 VA (110 V), <0.06 VA (250 V)
Frequency	
Rated frequency f_N	45–65 Hz (protection operates accurately)
Measuring range	16–95 Hz < 44Hz / > 66Hz (other protection is not steady except frequency protection)

[102)] Note that the measuring range is 0.5-190 V even if the rated voltage is adjusted.

Table 152 - Measuring circuits – LPCT inputs

Rated nominal current	10 A – 1 kA
Range	0.025–45 x I_N (protection nominal current)
Accuracy	I ≤ 1.5 x I_N: ±1% of value I > 1.5 x I_N: ±3 % of value
Rated secondary voltage	22.5 mV
Protection nominal current	10–1600 A
Dynamic	45 x I_N (protection nominal current)

Table 153 - Measuring circuits – LPVT inputs

Rated primary voltage	50–500 000 V
Rated secondary voltage	3.25 V
Network voltage	50–500 000 V

Table 154 - LPCT inputs

Nominal current	2.5 A to 20 kA
LPCT rated nominal current	25, 50, 80, 100 A
LPCT rated primary current	10 A to 5 kA
LPCT rated secondary current	22.5 mV
Dynamic	45 x nominal current
Protection nominal current	51–1600 A
Input impedance	2 MOhms / 500 pF
Thermal withstand	60 V

Table 155 - LPVT inputs

Network voltage	50 V – 500 kV
LPVT rated primary voltage	50 V – 500 kV
LPVT rated secondary voltage	3.25 V / √3
Rated secondary voltage	3.25 V / √3
Extender rated voltage	10 MOhms / 15 pF
Input impedance	0.25 to 1.5 rated voltage
Thermal withstand	25 V

9.6.5 External option modules

9.6.5.1 VSE-001 fiber-optic interface module

⚠⚠ DANGER

HAZARD OF ELECTRIC SHOCK, EXPLOSION, OR ARC FLASH

- This equipment must only be installed or serviced by qualified electrical personnel.
- Turn off all power supplying this device and the equipment in which it is installed before working on the device or equipment.
- Connect protective earth before turning on any power supplying this device.

Failure to follow these instructions will result in death or serious injury.

An external fiber-optic module VSE-001 is used to connect the device to a fiber-optic loop or a fiber-optic star. There are four different types of serial fiber-optic modules:

- VSE001PP (Plastic-plastic)
- VSE001GG (Glass-glass)

The modules provide a serial communication link up to 1 km (0.62 miles) with VSE 001 GG. With a serial-fibre interface module, it is possible to have the following serial protocols in use:

- None
- IEC-103
- Modbus slave
- SpaBus

The power for the module is taken from RS-232 connector of the PowerLogic P3U20 and P3U30 or from an external power supply interface. The module is connected to the RS-232 serial port with a VX082 or VX083 cable.

Figure 210 - VSE-001 module

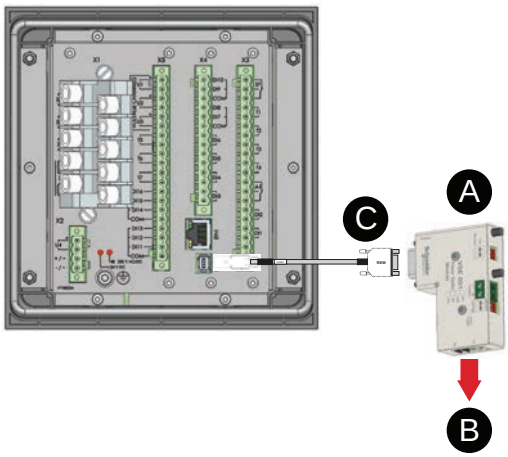

A. VSE-001 **C.** VX082
B. Communication bus

Module interface to the device

The physical interface of the VSE-001 is a 9-pin D-connector. The signal level is RS-232.

NOTE: The product manual for VSE-001 can be found on our website.

9.6.5.2 VSE-002 RS-485 interface module

⚠⚠ DANGER

HAZARD OF ELECTRIC SHOCK, EXPLOSION, OR ARC FLASH

- This equipment must only be installed or serviced by qualified electrical personnel.
- Turn off all power supplying this device and the equipment in which it is installed before working on the device or equipment.
- Connect protective earth before turning on any power supplying this device.

Failure to follow these instructions will result in death or serious injury.

An external RS-485 module VSE-002 (VSE002) is used to connect PowerLogic P3 protection devices to RS-485 bus. With the RS-485 serial interface module, the following serial protocols can be used:

- None
- IEC-103
- ModbusSlv
- SpaBus

The power for the module is taken from RS-232 connector of the protection device or from an external power supply interface. The module is connected to the RS-232 serial port with VX082 or VX083 cable.

Figure 211 - VSE-002 module

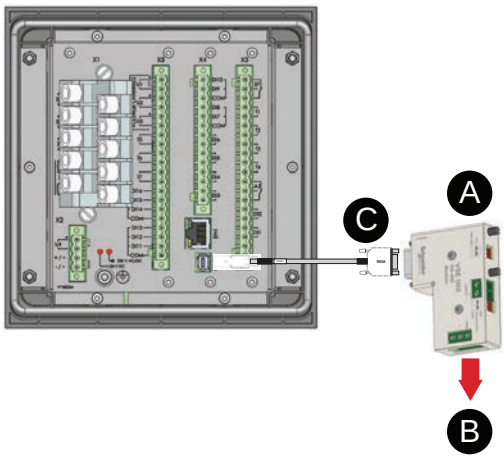

A. VSE-002
B. Communication bus
C. VX082

Module interface to the device

The physical interface of the VSE-002 is a 9-pin D-connector. The signal level is RS-232 and therefore, the interface type for the module has to be selected as **RS-232**.

It is possible to connect multible devices in daisychain. “Termination” has to be selected as **on** for the last unit in the chain. The same applies when only one unit is used.

Figure 212 - RS-232 and TTL interface

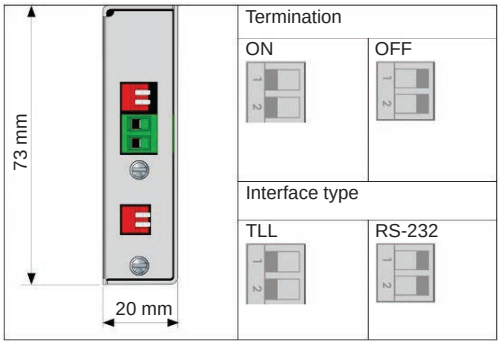

Table 156 - RS-232 and TTL interface

Pin number	TTL mode	RS-232 mode
1	-	-
2	RXD (in)	RXD (in)
3	TXD (out)	TXD (out)
4	RTS (in)	RTS (in)
5		
6		
7	GND	GND
8		
9	+8V (in)	+8V (in)

9.6.5.3 VPA-3CG Profibus interface module

⚠⚠ DANGER

HAZARD OF ELECTRIC SHOCK, EXPLOSION, OR ARC FLASH

- This equipment must only be installed or serviced by qualified electrical personnel.
- Turn off all power supplying this device and the equipment in which it is installed before working on the device or equipment.
- Connect protective earth before turning on any power supplying this device.

Failure to follow these instructions will result in death or serious injury.

PowerLogic P3U20 and P3U30 can be connected to Profibus DP by using an external Profibus interface module VPA-3CG (VPA3CG). The device can then be monitored from the host system. VPA-3CG is attached to the RS-232 connector at the back of the device with a VX-084 (VX084) cable. With the Profibus interface module, the following protocols can be used:

- None
- ProfibusDP

The power for the module is taken from an external power supply interface.

Figure 213 - VPA-3CG module

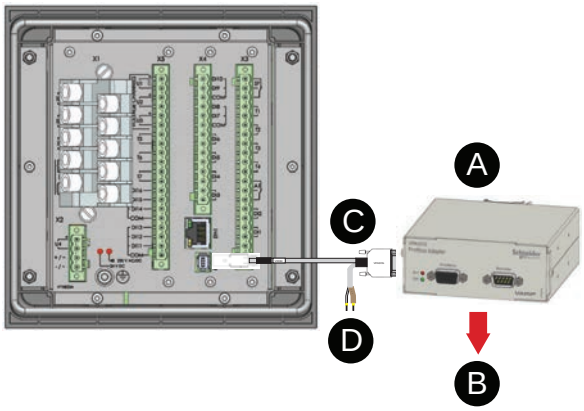

A. VPA-3CG
B. Communication bus
C. VX084
D. +12 Vdc power supply

Module interface to the device

The physical interface of the VPA-3CG Profibus interface module is a 9-pin D-connector.

Profibus devices are connected in a bus structure. Up to 32 stations (master or slave) can be connected in one segment. The bus is terminated by an active bus terminator at the beginning and end of each segments. When more than 32 stations are used, repeaters (line amplifiers) must be used to connect the individual bus segments.

The maximum cable length depends on the transmission speed and cable type. The specified cable length can be increased by the use of repeaters. The use of more than 3 repeaters in a series is not recommended.

A separate product manual for VPA-3CG can be found on our website.

9.6.5.4 VIO 12A RTD and analog input / output modules

VIO 12A I/O modules can be connected to PowerLogic P3U20 and P3U30 using RS-485 connection in interface modules. Alternatively VIO 12A I/O modules can be connected to PowerLogic P3U20 and P3U30 using RS-232 connection. If RS-232 connection is used a separate VX082 or VX083 connection cable and VSE001 or VSE002 option module are needed.

A separate product manual for VIO 12A is available.

9.6.6 Block diagrams

The status of the output contacts is shown when the relay is energized but none of the protection, controlling or self-supervision elements are activated.

Figure 214 - P3U20 5AA A1ABAA block diagram

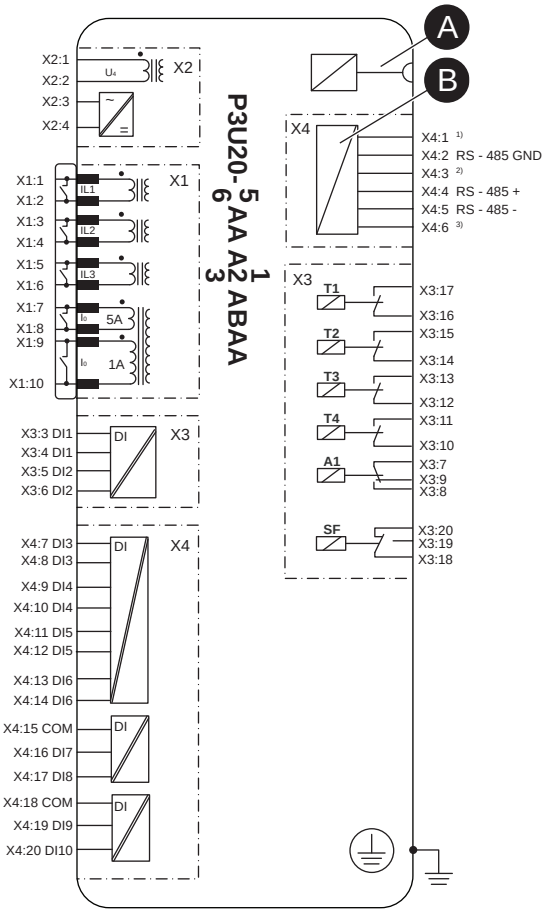

A. Front
B. Communications
1) Cable shield gnd
2) + side termination, connect to X4:4
3) - side termination, connect to X4:5

NOTE: Connect only one (5 A, 1 A or 0.2 A) earth fault overcurrent input.

⚠⚠ DANGER

HAZARD OF ELECTRIC SHOCK, EXPLOSION, OR ARC FLASH

Connect the device's protective ground to functional earth according to the connection diagrams presented in this document.

Failure to follow this instruction will result in death or serious injury.

Figure 215 - P3U20 5AA A1ACAA block diagram

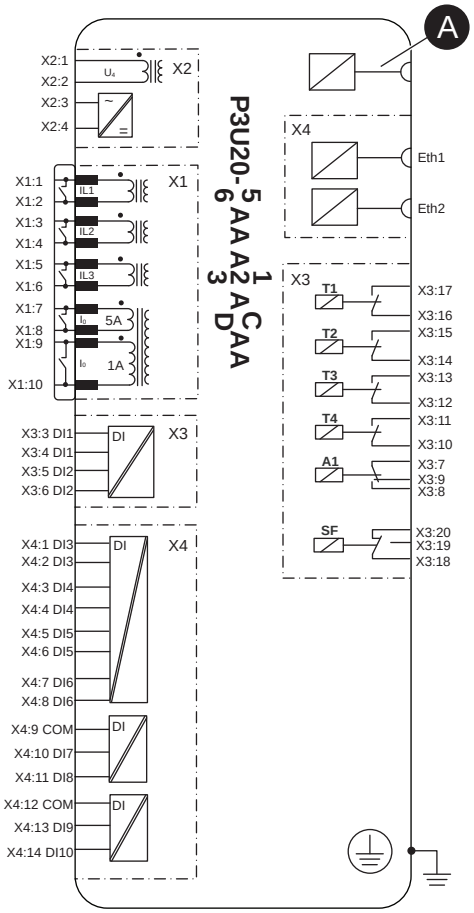

A. Front

NOTE: Connect only one (5 A, 1 A or 0.2 A) earth fault overcurrent input.

⚠⚠ DANGER

HAZARD OF ELECTRIC SHOCK, EXPLOSION, OR ARC FLASH

Connect the device's protective ground to functional earth according to the connection diagrams presented in this document.

Failure to follow this instruction will result in death or serious injury.

Figure 216 - P3U20 5AA A1AEAA block diagram

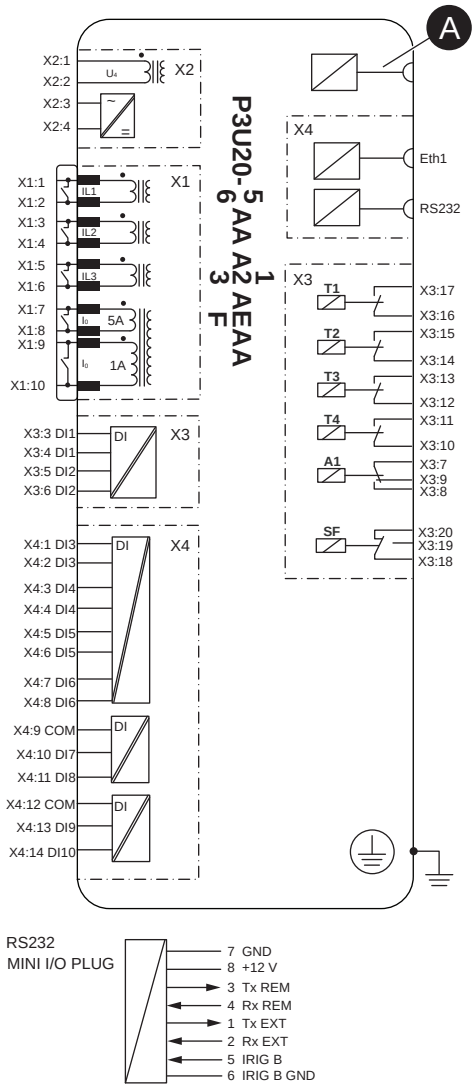

A. Front

NOTE: Connect only one (5 A, 1 A or 0.2 A) earth fault overcurrent input.

⚠⚠ DANGER

HAZARD OF ELECTRIC SHOCK, EXPLOSION, OR ARC FLASH

Connect the device's protective ground to functional earth according to the connection diagrams presented in this document.

Failure to follow this instruction will result in death or serious injury.

Figure 217 - P3U20 5AA A1AHAA block diagram

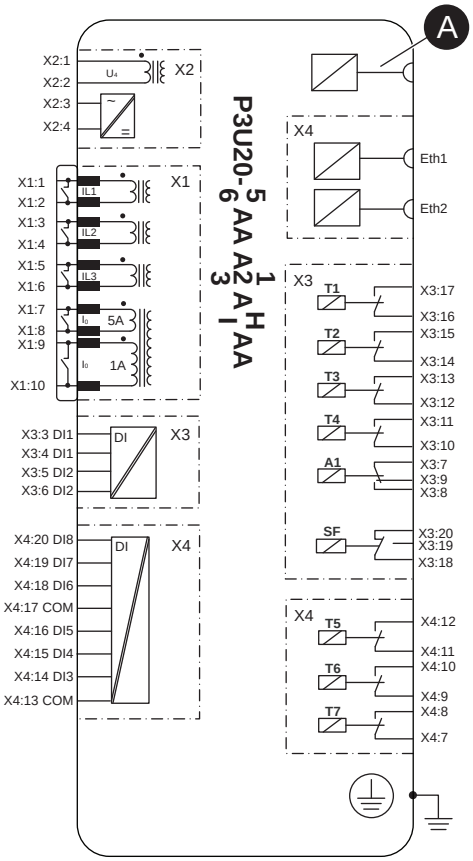

A. Front

NOTE: Connect only one (5 A, 1 A or 0.2 A) earth fault overcurrent input.

⚠⚠ DANGER

HAZARD OF ELECTRIC SHOCK, EXPLOSION, OR ARC FLASH

Connect the device's protective ground to functional earth according to the connection diagrams presented in this document.

Failure to follow this instruction will result in death or serious injury.

Figure 218 - P3U20 5AA A1AGAA block diagram

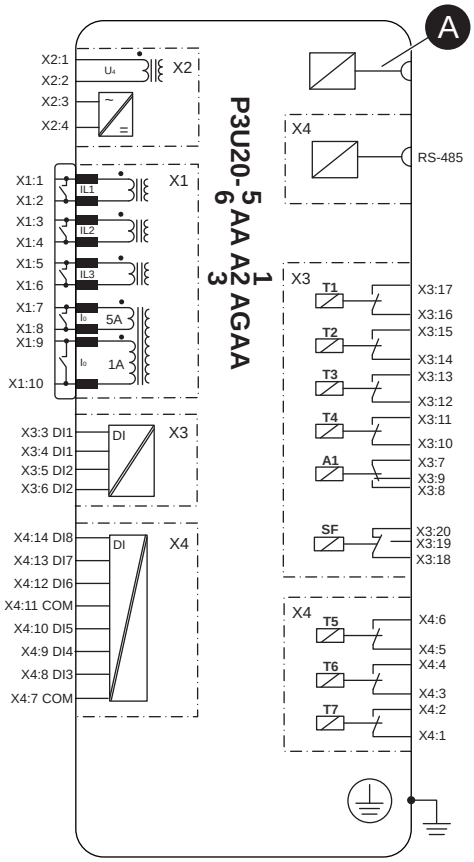

A. Front

NOTE: Connect only one (5 A, 1 A or 0.2 A) earth fault overcurrent input.

⚠⚠ DANGER

HAZARD OF ELECTRIC SHOCK, EXPLOSION, OR ARC FLASH

Connect the device's protective ground to functional earth according to the connection diagrams presented in this document.

Failure to follow this instruction will result in death or serious injury.

Figure 219 - P3U30 5AA A1BBA block diagram

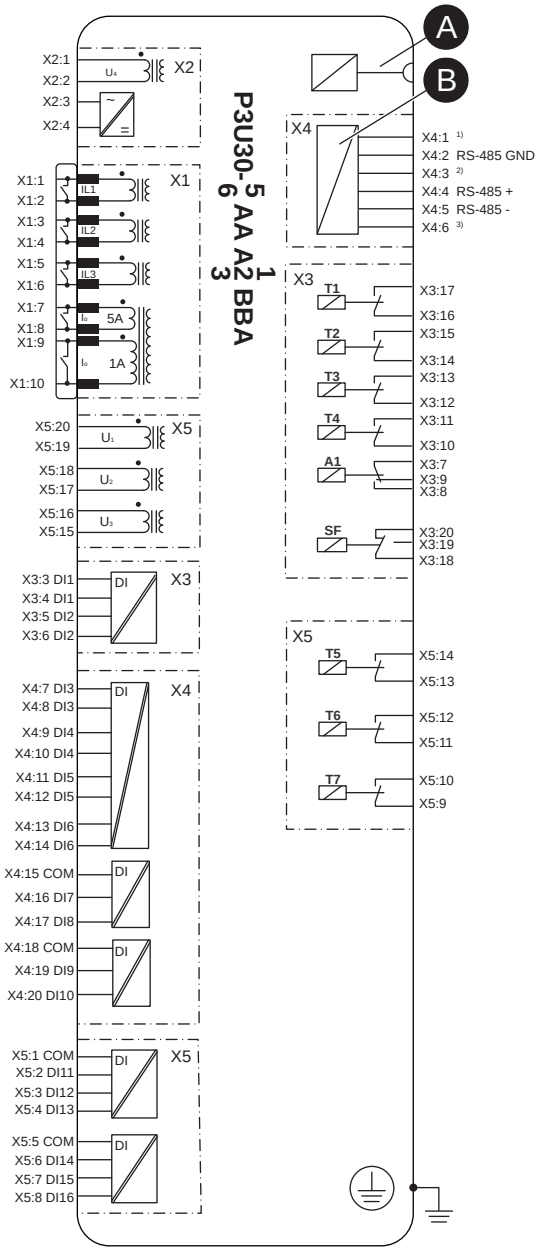

A. Front
B. Communications
1) Cable shield gnd
2) + side termination, connect to X4:4
3) - side termination, connect to X4:5

NOTE: Connect only one (5 A, 1 A or 0.2 A) earth fault overcurrent input.

⚠⚠ DANGER

HAZARD OF ELECTRIC SHOCK, EXPLOSION, OR ARC FLASH

Connect the device's protective ground to functional earth according to the connection diagrams presented in this document.

Failure to follow this instruction will result in death or serious injury.

Figure 220 - P3U30 5AA A1BBA block diagram – LPIT

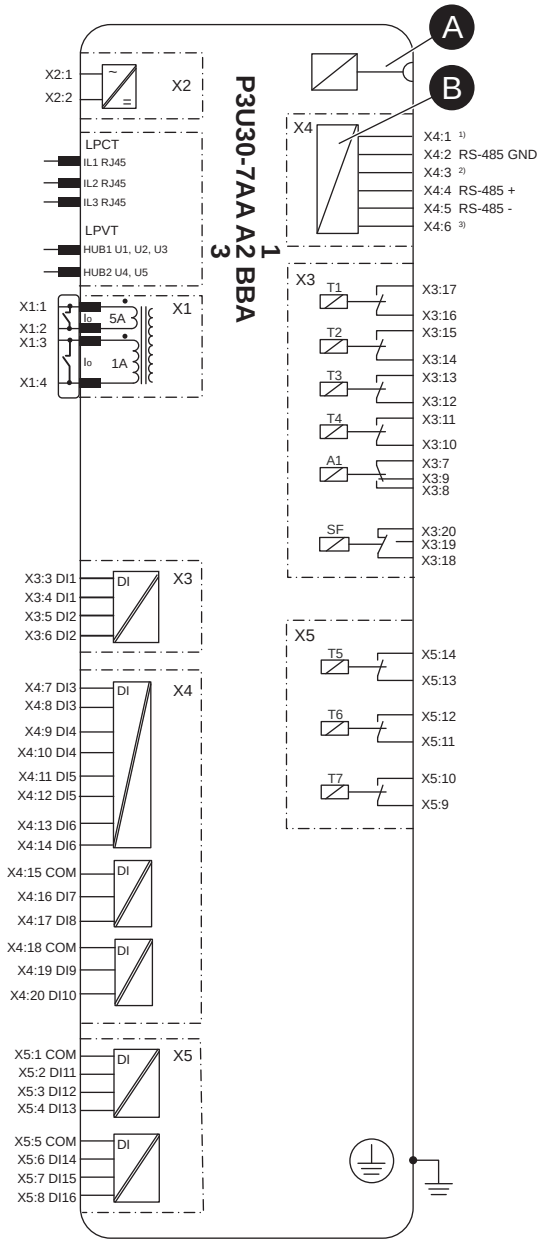

A. Front
B. Communications
1) Cable shield gnd
2) + side termination, connect to X4:4
3) - side termination, connect to X4:5

NOTE: Connect only one (5 A, 1 A or 0.2 A) earth fault overcurrent input.

⚠⚠ DANGER

HAZARD OF ELECTRIC SHOCK, EXPLOSION, OR ARC FLASH

Connect the device's protective ground to functional earth according to the connection diagrams presented in this document.

Failure to follow this instruction will result in death or serious injury.

Figure 221 - P3U30 5AA A1BCA block diagram

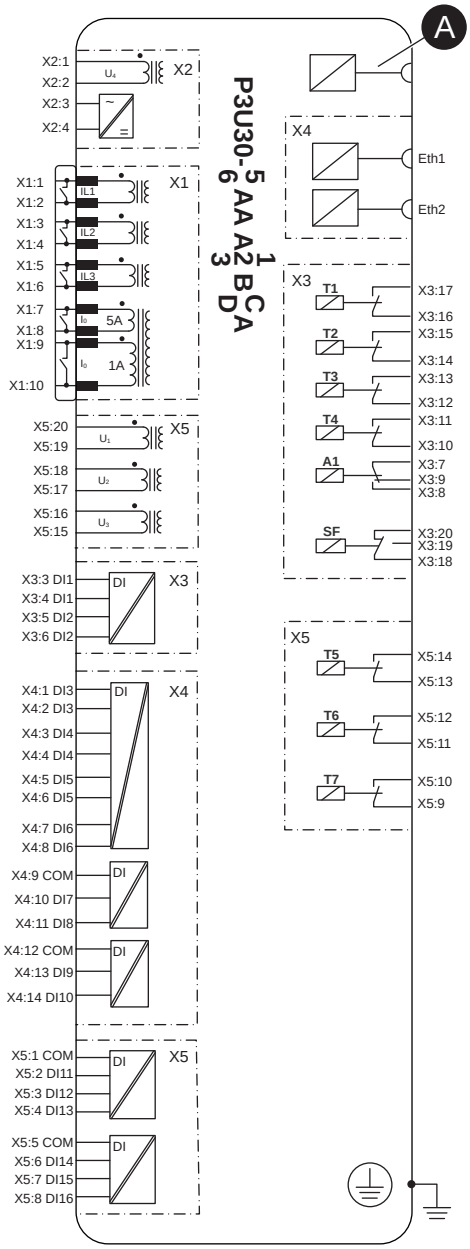

A. Front

NOTE: Connect only one (5 A, 1 A or 0.2 A) earth fault overcurrent input.

⚠⚠ DANGER

HAZARD OF ELECTRIC SHOCK, EXPLOSION, OR ARC FLASH

Connect the device's protective ground to functional earth according to the connection diagrams presented in this document.

Failure to follow this instruction will result in death or serious injury.

Figure 222 - P3U30 3AA A1 BEA block diagram

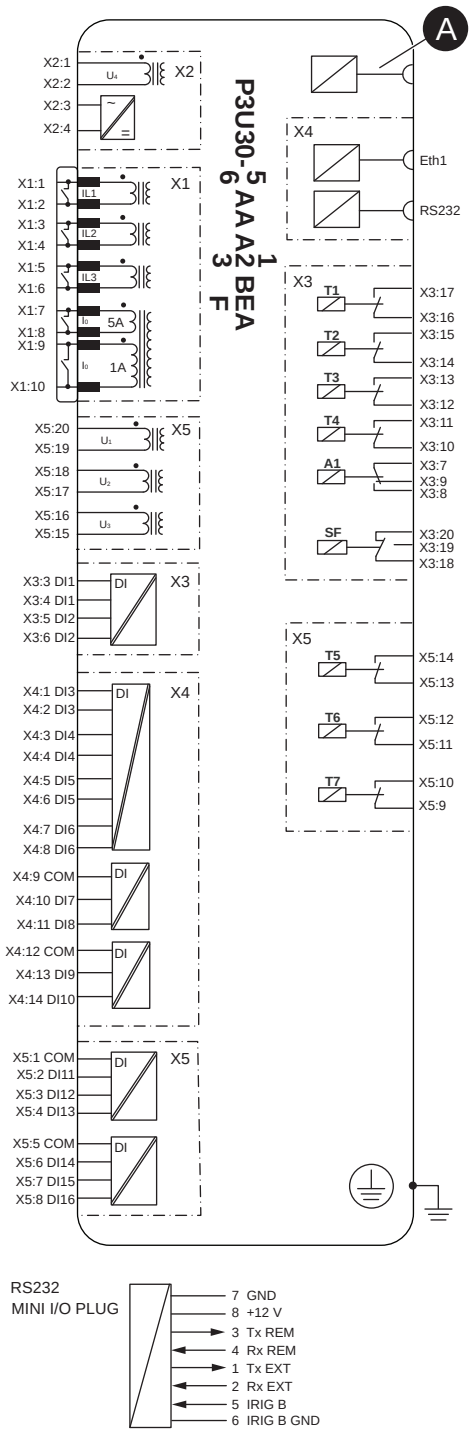

A. Front

NOTE: Connect only one (5 A, 1 A or 0.2 A) earth fault overcurrent input.

⚠⚠ DANGER

HAZARD OF ELECTRIC SHOCK, EXPLOSION, OR ARC FLASH

Connect the device's protective ground to functional earth according to the connection diagrams presented in this document.

Failure to follow this instruction will result in death or serious injury.

Figure 223 - P3U30 5AA A1BHA block diagram

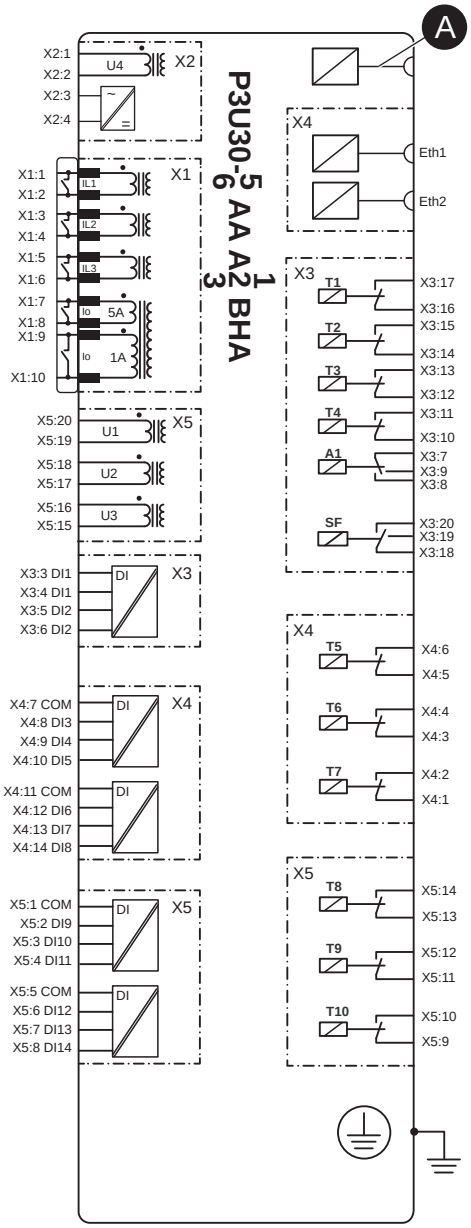

A. Front

NOTE: Connect only one (5 A, 1 A or 0.2 A) earth fault overcurrent input.

⚠⚠ DANGER

HAZARD OF ELECTRIC SHOCK, EXPLOSION, OR ARC FLASH

Connect the device's protective ground to functional earth according to the connection diagrams presented in this document.

Failure to follow this instruction will result in death or serious injury.

9.6.7 Connection examples

Two-phase current measurement

Figure 224 - Two-phase current measurement

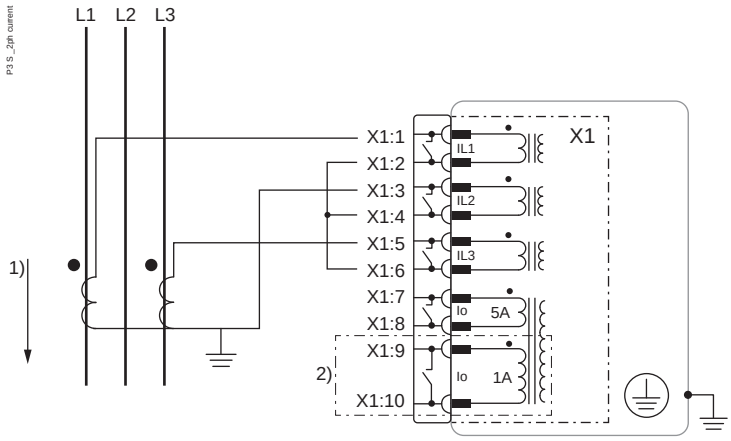

1) Positive CT current flow

2) Use either 5 A or 1 A earth fault overcurrent input

Applications and limitations:

- suitable for short-circuit protection only
- to be used in three-wire systems only
- assumption $I_1 + I_2 + I_3 = 0$. Measurement algorithm is $-I_2 = I_1 + I_3$
- earth fault overcurrent calculation ($I_{0\ Calc}$) is not possible
- broken conductor, negative sequence overcurrent and incorrect phase sequence calculation are not possible

NOTE: Connect only one (5 A, 1 A or 0.2 A) earth fault overcurrent input.

⚠⚠ DANGER

HAZARD OF ELECTRIC SHOCK, EXPLOSION, OR ARC FLASH

- Always connect the polarity of the current transformer (CT) and / or the voltage transformer (VT) and their secondary ground wiring according to the connection diagrams presented in this document.
- Connect the device's protective ground to functional earth according to the connection diagrams presented in this document.

Failure to follow this instruction will result in death or serious injury.

Three-phase current measurement

Figure 225 - Three-phase current measurement

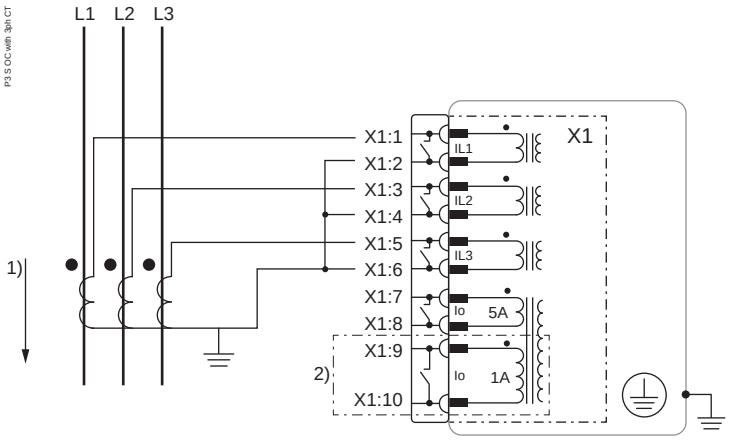

1) Positive CT current flow

2) Use either 5 A or 1 A earth fault overcurrent input

Applications and limitations:

- all types of three-phase networks
- all current-based protection functions available
- earth fault overcurrent can be calculated by the relay

NOTE: Connect only one (5 A, 1 A or 0.2 A) earth fault overcurrent input.

⚠⚠ DANGER

HAZARD OF ELECTRIC SHOCK, EXPLOSION, OR ARC FLASH

- Always connect the polarity of the current transformer (CT) and / or the voltage transformer (VT) and their secondary ground wiring according to the connection diagrams presented in this document.
- Connect the device's protective ground to functional earth according to the connection diagrams presented in this document.

Failure to follow this instruction will result in death or serious injury.

Three-phase current measurement and summation of earth fault overcurrent

Figure 226 - Three-phase current measurement

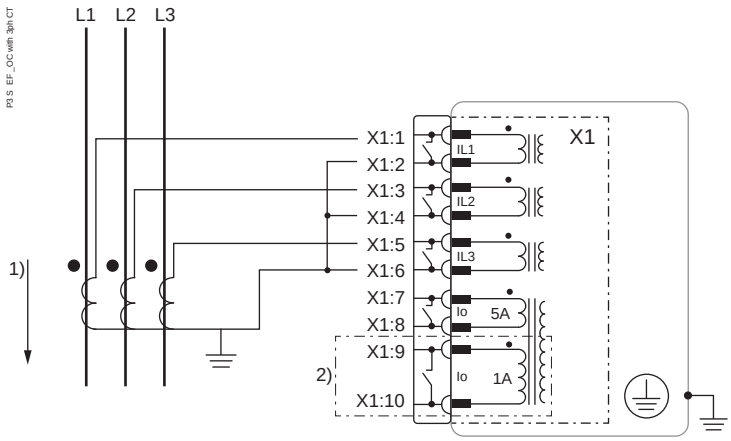

1) Positive CT current flow

2) Use either 5 A or 1 A earth fault overcurrent input

Applications and limitations:

- all types of three-phase networks
- dissimilarity of the CTs results in inaccuracy in the earth fault overcurrent measurement resulting in limitation in sensitivity
- uneven saturation of the CTs results in inaccuracy in the earth fault overcurrent measurement resulting in limitation in sensitivity
- advantage: the earth fault overcurrent can be monitored by the disturbance recorder

NOTE: Connect only one (5 A, 1 A or 0.2 A) earth fault overcurrent input.

⚠⚠ DANGER

HAZARD OF ELECTRIC SHOCK, EXPLOSION, OR ARC FLASH

- Always connect the polarity of the current transformer (CT) and / or the voltage transformer (VT) and their secondary ground wiring according to the connection diagrams presented in this document.
- Connect the device's protective ground to functional earth according to the connection diagrams presented in this document.

Failure to follow this instruction will result in death or serious injury.

Earth fault overcurrent calculation from phase currents

Figure 227 - Earth fault overcurrent calculation from phase currents

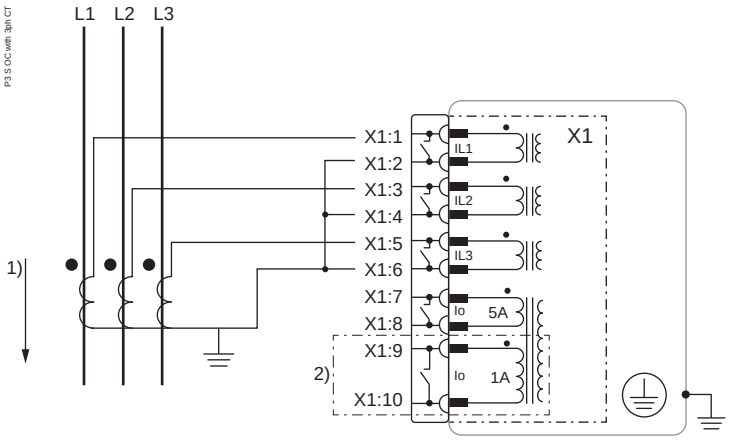

1) Positive CT current flow

2) Not in use

Applications and limitations:

- all types of three-phase networks
- dissimilarity of the CTs results in inaccuracy in the earth fault overcurrent measurement resulting in limitation in sensitivity
- uneven saturation of the CTs results in inaccuracy in the earth fault overcurrent measurement resulting in limitation in sensitivity
- disadvantage: the calculated earth fault current cannot be monitored by the disturbance recorder

NOTE: Connect only one (5 A, 1 A or 0.2 A) earth fault overcurrent input.

⚠⚠ DANGER

HAZARD OF ELECTRIC SHOCK, EXPLOSION, OR ARC FLASH

- Always connect the polarity of the current transformer (CT) and / or the voltage transformer (VT) and their secondary ground wiring according to the connection diagrams presented in this document.
- Connect the device's protective ground to functional earth according to the connection diagrams presented in this document.

Failure to follow this instruction will result in death or serious injury.

Earth fault overcurrent by core balance CT

Figure 228 - Earth fault overcurrent by core balance CT

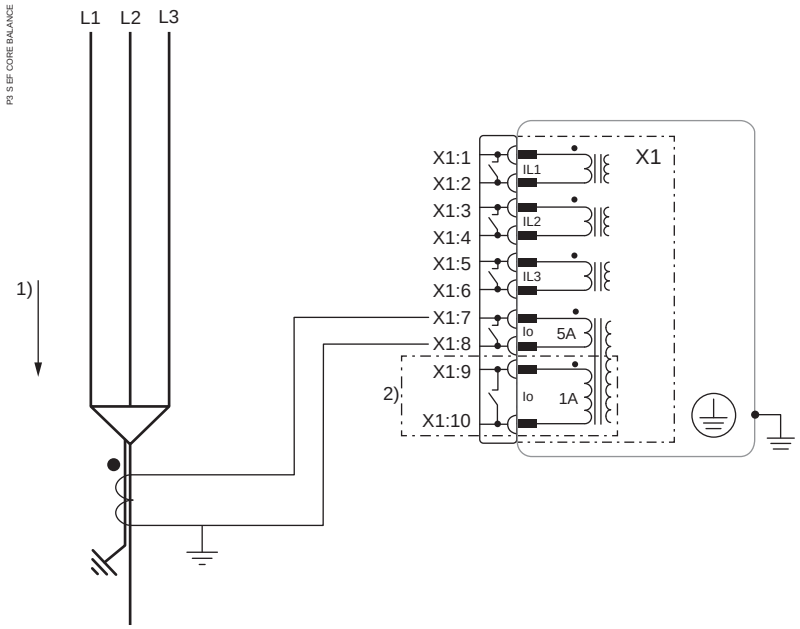

1) Positive CT current flow

2) Use either 5 A or 1 A earth fault overcurrent input

Applications and limitations:

- preferred earth fault overcurrent measurement in three-phase networks
- good sensitivity

NOTE: Connect only one (5 A, 1 A or 0.2 A) earth fault overcurrent input.

⚠⚠ DANGER

HAZARD OF ELECTRIC SHOCK, EXPLOSION, OR ARC FLASH

- Always connect the polarity of the current transformer (CT) and / or the voltage transformer (VT) and their secondary ground wiring according to the connection diagrams presented in this document.
- Connect the device's protective ground to functional earth according to the connection diagrams presented in this document.

Failure to follow this instruction will result in death or serious injury.

Earth fault overcurrent measured from neutral earthing

Figure 229 - Earth fault overcurrent measured from neutral earthing

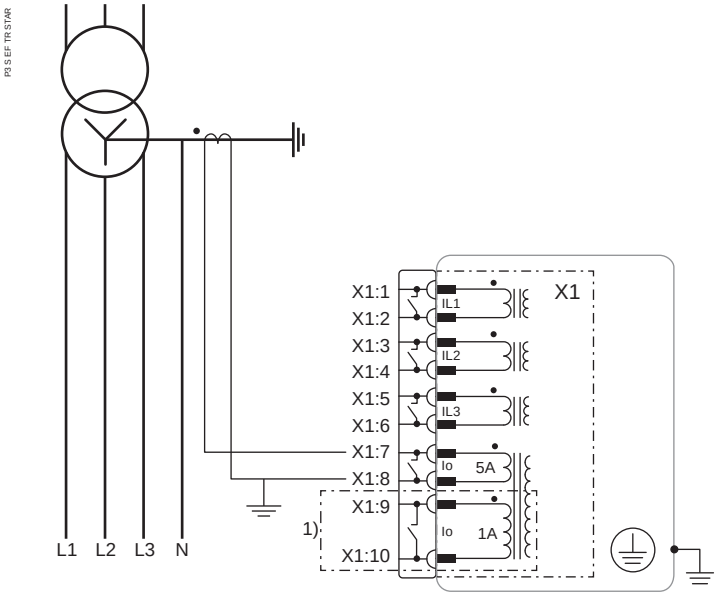

1) Use either 5A or 1A earth fault overcurrent input

Applications and limitations:

- used in TN-S network

  NOTE: Connect only one (5 A, 1 A or 0.2 A) earth fault overcurrent input.

⚠⚠ DANGER

HAZARD OF ELECTRIC SHOCK, EXPLOSION, OR ARC FLASH

- Always connect the polarity of the current transformer (CT) and / or the voltage transformer (VT) and their secondary ground wiring according to the connection diagrams presented in this document.
- Connect the device's protective ground to functional earth according to the connection diagrams presented in this document.

Failure to follow this instruction will result in death or serious injury.

Earth fault overcurrent measurement by sum of phase overcurrent and earth fault overcurrent

Figure 230 - Earth fault overcurrent measurement by sum of phase overcurrent and earth fault overcurrent

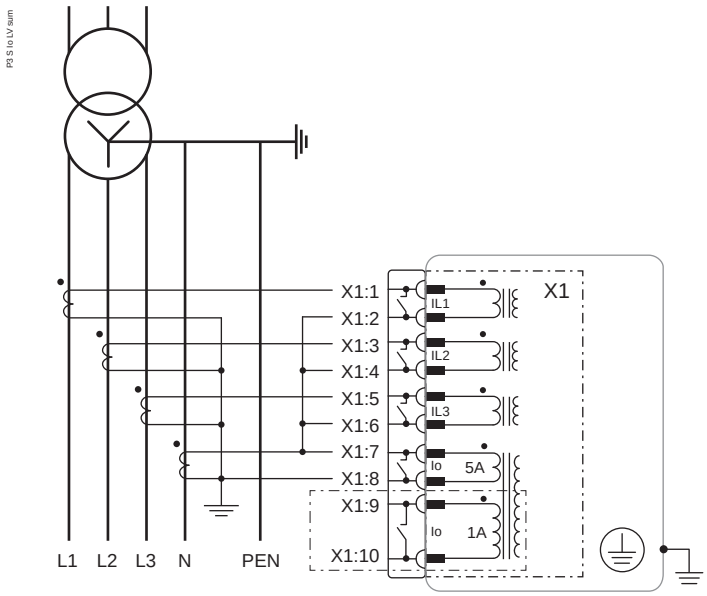

1) Use either 5 A or 1 A earth fault overcurrent input

Applications and limitations:

- used in TN network

  NOTE: Connect only one (5 A, 1 A or 0.2 A) earth fault overcurrent input.

⚠⚠ DANGER

HAZARD OF ELECTRIC SHOCK, EXPLOSION, OR ARC FLASH

- Always connect the polarity of the current transformer (CT) and / or the voltage transformer (VT) and their secondary ground wiring according to the connection diagrams presented in this document.
- Connect the device's protective ground to functional earth according to the connection diagrams presented in this document.

Failure to follow this instruction will result in death or serious injury.

Earth fault overcurrent measurement by using core balance CT

Figure 231 - Earth fault overcurrent measurement by using core balance CT

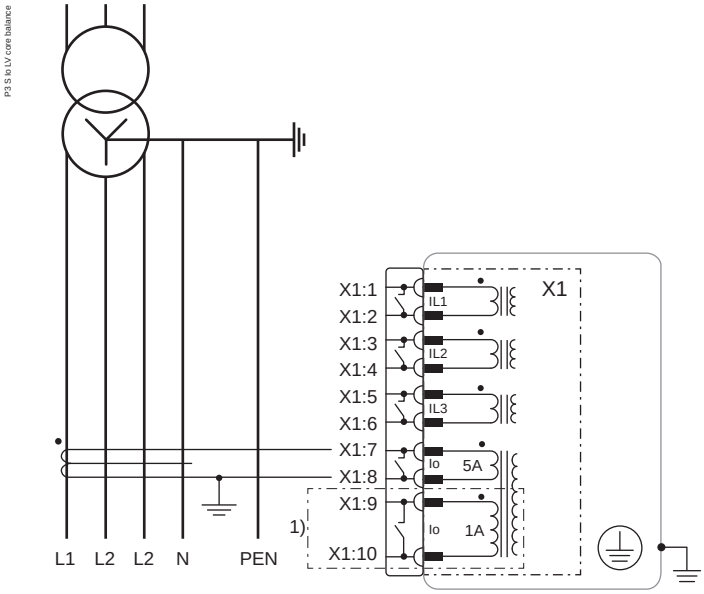

1) Use either 5 A or 1 A earth fault overcurrent input

Applications and limitations:

- used in TT network

  NOTE: Connect only one (5 A, 1 A or 0.2 A) earth fault overcurrent input.

⚠⚠ DANGER

HAZARD OF ELECTRIC SHOCK, EXPLOSION, OR ARC FLASH

- Always connect the polarity of the current transformer (CT) and / or the voltage transformer (VT) and their secondary ground wiring according to the connection diagrams presented in this document.
- Connect the device's protective ground to functional earth according to the connection diagrams presented in this document.

Failure to follow this instruction will result in death or serious injury.

3LN voltages + 3LN currents + core balance EF

Figure 232 - 3LN voltages + 3LN currents + core balance EF

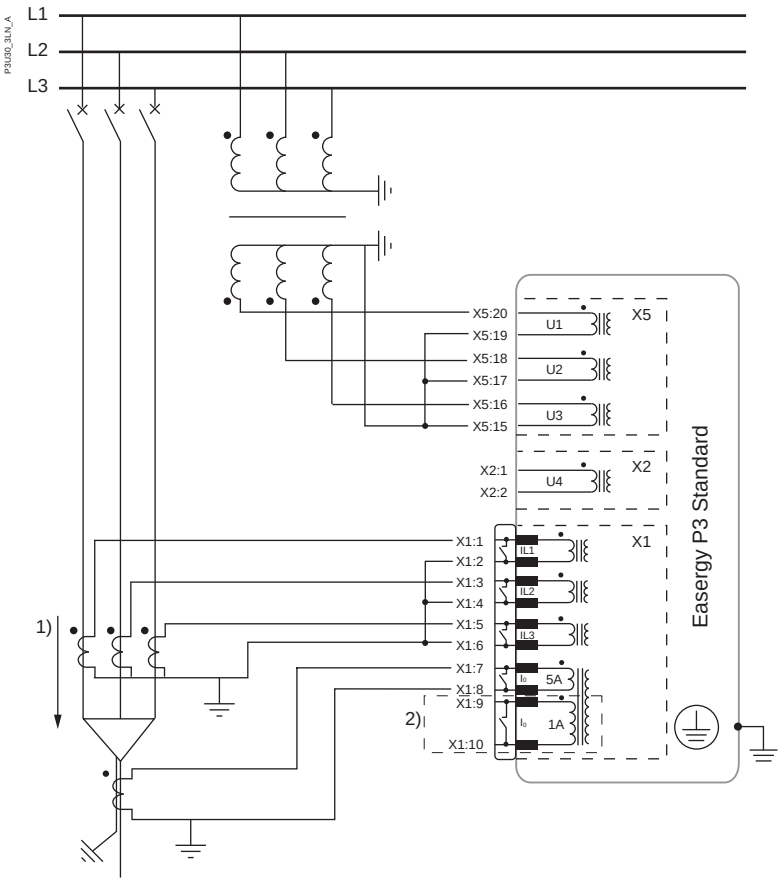

1) Positive CT current flow, positive energy direction (imported), negative energy direction (exported)

1) Use either 5 A or 1 A earth fault overcurrent input

Applications and limitations:

- applicable to all types of three-phase networks
- preferred earth fault overcurrent measurement in three-phase networks
- offers good sensitivity for EF overcurrent
- neutral displacement voltage (Uo) calculated by the relay

NOTE: Connect only one (5 A, 1 A or 0.2 A) earth fault overcurrent input.

⚠⚠ DANGER

HAZARD OF ELECTRIC SHOCK, EXPLOSION, OR ARC FLASH

- Always connect the polarity of the current transformer (CT) and / or the voltage transformer (VT) and their secondary ground wiring according to the connection diagrams presented in this document.
- Connect the device's protective ground to functional earth according to the connection diagrams presented in this document.

Failure to follow this instruction will result in death or serious injury.

3LN voltages + Uo + 3LN currents + core balance EF

Figure 233 - 3LN voltages + Uo + 3LN currents + core balance EF

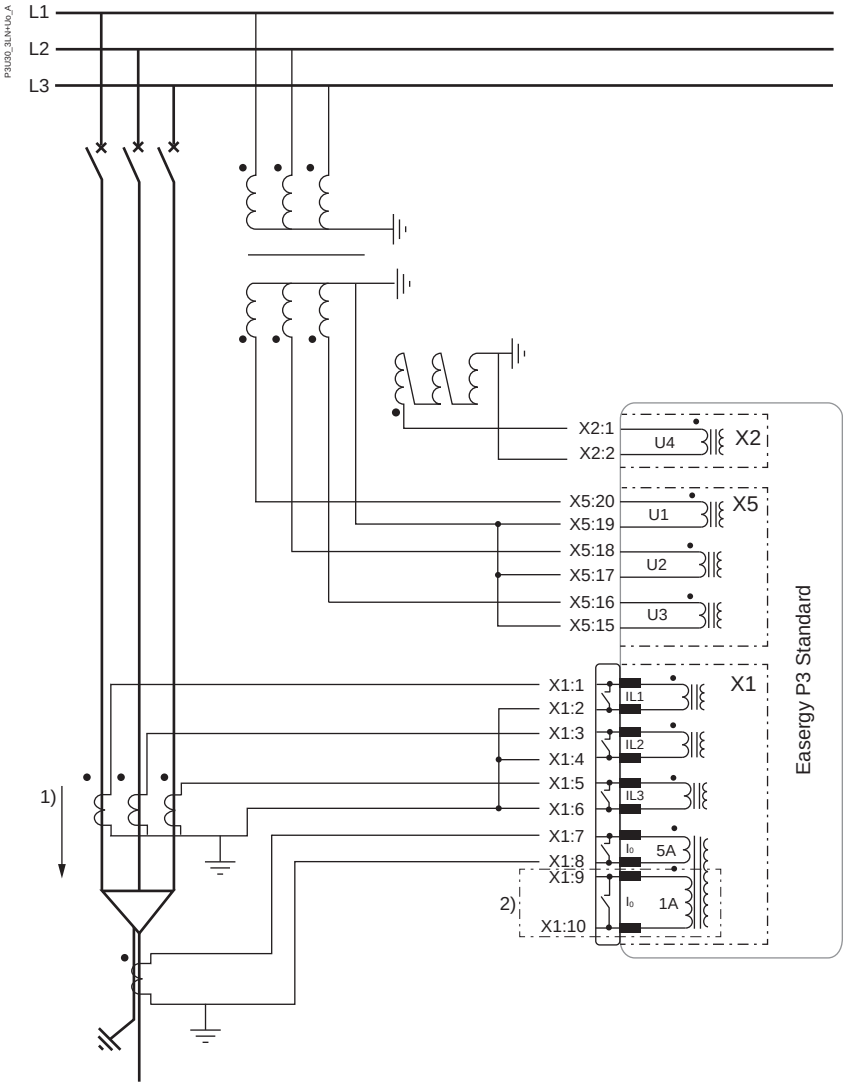

1) Positive CT current flow, positive energy direction (imported), negative energy direction (exported)

1) Use either 5 A or 1 A earth fault overcurrent input

Applications and limitations:

- applicable to all types of three-phase networks
- preferred earth fault overcurrent measurement in three-phase networks
- offers good sensitivity for EF overcurrent

NOTE: Connect only one (5 A, 1 A or 0.2 A) earth fault overcurrent input.

DANGER

HAZARD OF ELECTRIC SHOCK, EXPLOSION, OR ARC FLASH

- Always connect the polarity of the current transformer (CT) and / or the voltage transformer (VT) and their secondary ground wiring according to the connection diagrams presented in this document.
- Connect the device's protective ground to functional earth according to the connection diagrams presented in this document.

Failure to follow this instruction will result in death or serious injury.

Three-phase current measurement with LPCTs

Figure 234 - Three-phase current measurement with LPCTs

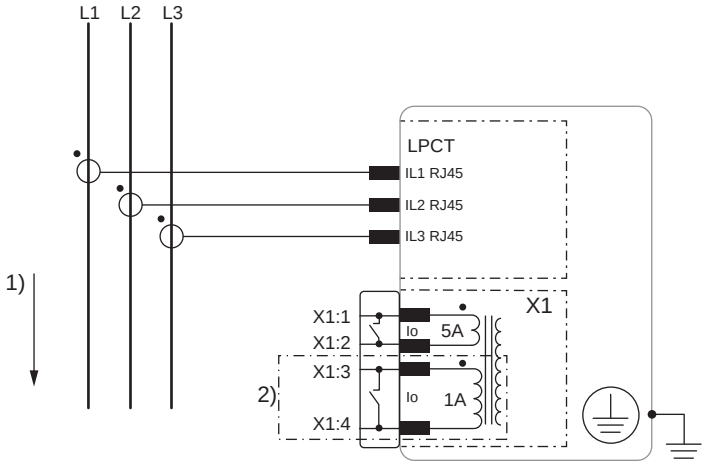

1) Positive CT current flow

2) Use either 5 A or 1 A earth fault overcurrent input

Applications and limitations:

- all types of three-phase networks
- all current-based protection functions available
- earth fault overcurrent can be calculated by the relay

NOTE: Connect only one (5 A, 1 A or 0.2 A) earth fault overcurrent input.

DANGER

HAZARD OF ELECTRIC SHOCK, EXPLOSION, OR ARC FLASH

- Always connect the polarity of the current transformer (CT) and / or the voltage transformer (VT) and their secondary ground wiring according to the connection diagrams presented in this document.
- Connect the device's protective ground to functional earth according to the connection diagrams presented in this document.

Failure to follow this instruction will result in death or serious injury.

Three line-to-neutral LPVTs

NOTE: If one or two LPVTs are connected to the LPVT hub connector, a termination accessory delivered with the protection device needs to be plugged on the second and third input.

Figure 235 - Three line-to-neutral LPVTs

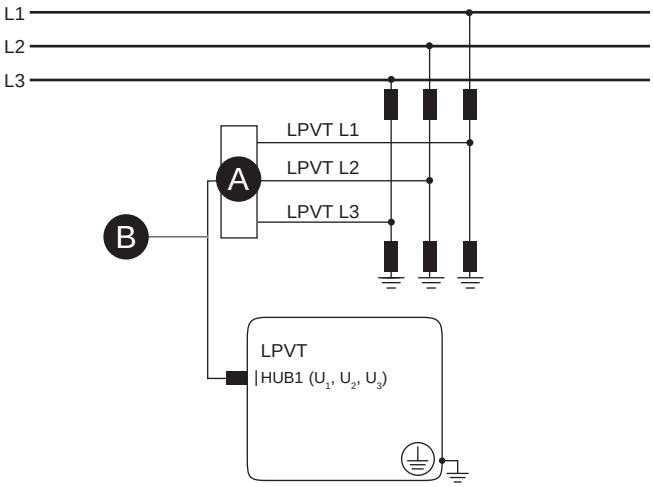

A. LPVT hub connector (EMS59573)

B. Cable < 10 m

DANGER

HAZARD OF ELECTRIC SHOCK, EXPLOSION, OR ARC FLASH

- Always connect the polarity of the current transformer (CT) and the voltage transformer (VT) and their secondary ground wiring according to the connection diagrams presented in this document.
- Connect the device's protective ground to functional earth according to the connection diagrams presented in this document.

Failure to follow this instruction will result in death or serious injury.

Figure 236 - Three line-to-neutral LPVTs + one line-to-neutral LPVT

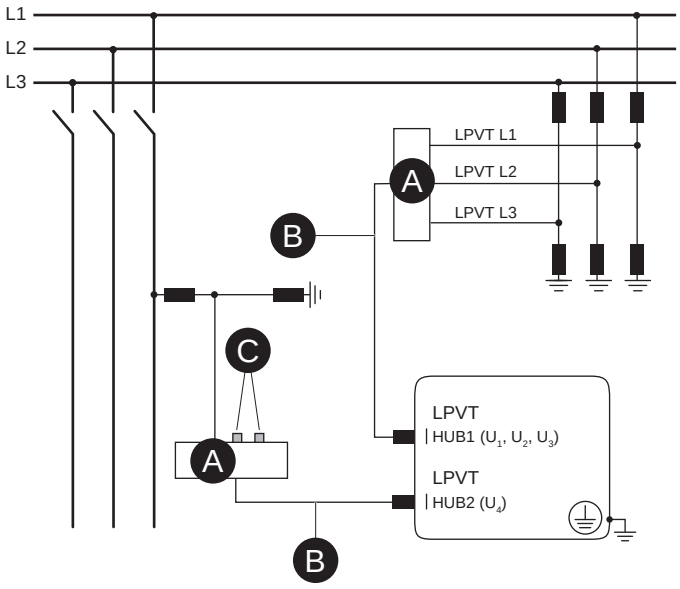

A. LPVT hub connector (EMS59573)

B. Cable < 10 m

C. Termination accessories

⚠⚠ DANGER

HAZARD OF ELECTRIC SHOCK, EXPLOSION, OR ARC FLASH

- Always connect the polarity of the current transformer (CT) and the voltage transformer (VT) and their secondary ground wiring according to the connection diagrams presented in this document.
- Connect the device's protective ground to functional earth according to the connection diagrams presented in this document.

Failure to follow this instruction will result in death or serious injury.

9.6.8 Low-power instrument transformers

Protection devices need current and/or voltage data from the equipment to be protected. For technical, economic and safety reasons, this data cannot be obtained directly from the equipment’s medium-voltage (MV) primary elements. For this purpose, low-power instrument transformers (LPITs) can be used.

LPITs:

- reduce the amplitudes of the secondary quantities to be measured
- provide galvanic separation

There are two types of LPITs:

- low-power current transformers (LPCTs) that are connected on the MV network primary circuit and supply a reduced voltage value to the secondary circuit, proportional to the network current on which they are installed.
- low-power voltage transformers (LPVTs) that are connected to the MV network primary and supply the secondary circuit with a reduced voltage value, proportional to the network voltage on which they are installed.

Using LPITs has many benefits compared to using traditional CTs or VTs:

- improved personal safety during testing and operation
- one LPCT replaces the dedicated measurement CTs and protection CTs
- the LPCT primary rating is no longer to be as close as possible to the nominal current
- time and money savings during project planning and execution
- reduced environmental impact because of reduced instrument transformer size

LPITs compliant with the standards IEC 61869 (replacing the IEC 60044 series) part 10 or 11 and IEC 61869 part 8 with dedicated adapter can be connected to the LPIT inputs of PowerLogic P3 devices.

NOTE: Passive Rogowski coils are not compatible with our LPCT input.

9.6.8.1 Connections – rear panel

Figure 237 - P3U real panel – LPIT

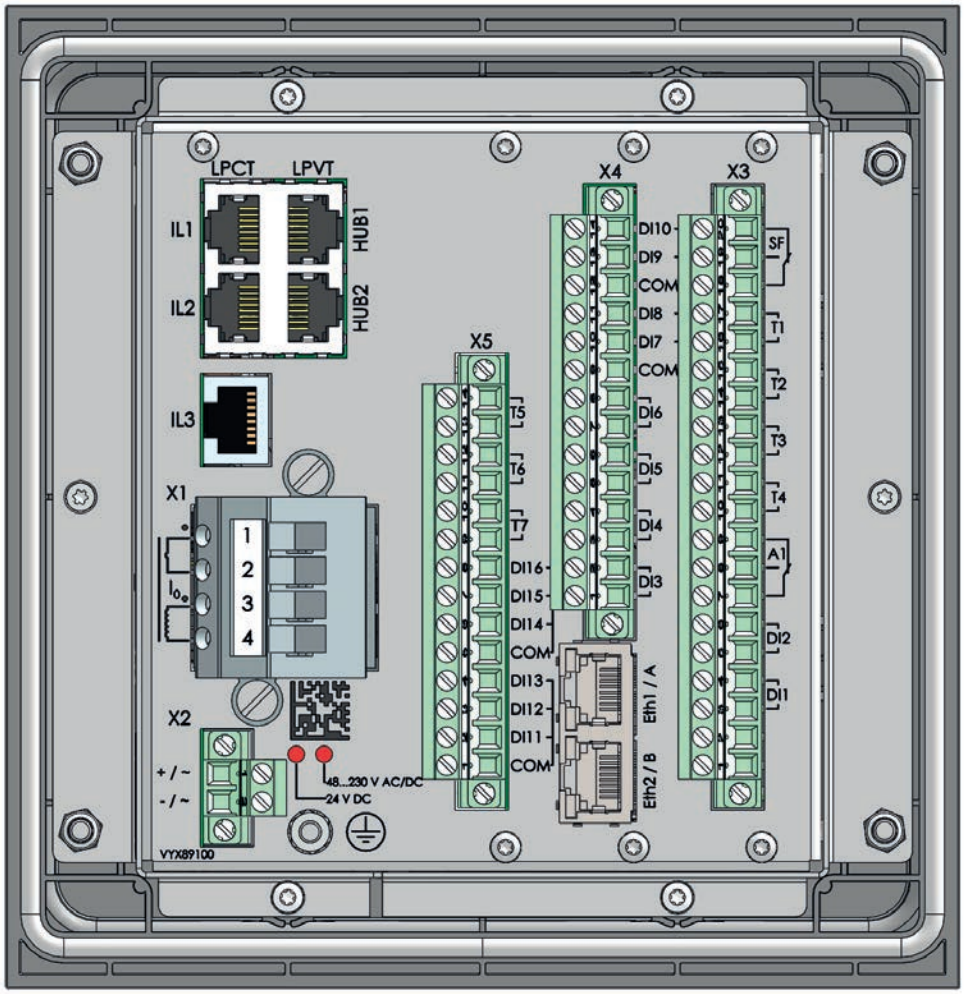

NOTE: If the LPCT sensor is disconnected, the current becomes zero, and an alarm is raised in diagnosis log.

Table 157 - Terminal pins 8/M/

Connector / Pin no.	Symbol	Description
I_{L1}	I_{L1}	LPCT sensor L1
I_{L2}	I_{L2}	LPCT sensor L2
I_{L3}	I_{L3}	LPCT sensor L3
HUB1	U_{LL}/U_{LN}	Interface for LPVT HUB1 for connecting LPVT sensors U1–U3
HUB2	$U_0/U_{LL}/U_{LN}$	Interface for LPVT HUB2 for connecting LPVT sensors U4

Table 158 - Terminal X1 connections

	Phase current connection pins / input polarity / nominal secondary current		7 Pluggable clamps			8 Pluggable ring lugs		
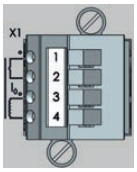	**Earth fault overcurrent current connection pins / input polarity / nominal secondary current**		**A=1/5A**	**B=0.2/1A**	**C=CSH 2/20 A**	**A=1/5A**	**B=0.2/1A**	**C=CSH 2/20 A**
	1	Io (S1)	5A	1A	20A	5A	1A	20A
	2	Io (S2)						
	3	Io (S1)	1A	0.2A	2A	1A	0.2A	2A
	4	Io (S2)						

Table 159 - Terminal X2 connections (LPCT/LPVT)

	No.	Symbol	Description
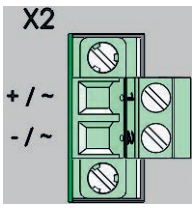	1	+ / ~	Auxiliary voltage
	2	- / ~	Auxiliary voltage

9.6.9 LPVT hub connector (reference EMS59573)

Description

The LPVT hub connector is a simple passive device that combines three LPVT signals coming from 3 different connectors on one single RJ45 connection.

The output of the LPVT hub connector is directly connected to the LPVT input of the PowerLogic P3 protection relay.

The LPVT hub connector also manages the presence of each LPVT connection thanks to a daisy chain across the three sensors. If at least one LPVT is missing or one cable is damaged, an alarm event is logged and displayed on the local panel.

Figure 238 - LPVT hub connector

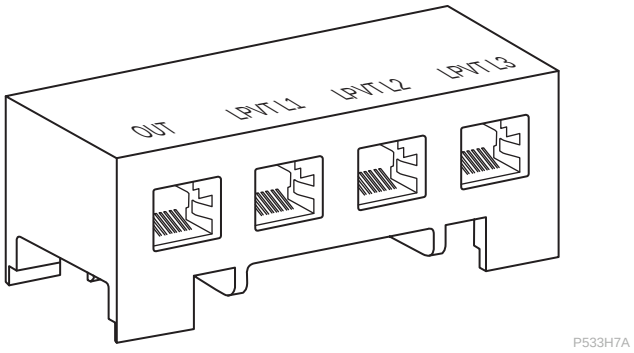

Connection

The LPVT hub connector is connected to the protection relay through its RJ45 output connector and to the LPVT sensors through the RJ45 input connectors.

Characteristics

Table 160 - Characteristics of the LPVT hub connector

Characteristics	Values
Electric	
Input voltage	< 10 V
Input voltage limits	< 30 V
Network frequency	50/60 Hz
Electrical connection	Output: RJ45 connector Input: 3 RJ45 connector
Form factor	
Dimension (L x W x H)	95 mm x 40 mm x 40 mm (3.74 x 1.57 x 1.57 in)
Weight	0.25 kg (0.55 lb)

Characteristics	Values	
Mounting support	DIN rail	
Environment		
IP degree of protection	IEC 60529	IP30
IK degree of protection	IEC 62262	IK07
Ambient air temperature for operation	-	-40°C to 85°C (-40°F to 185°F)
Ambient air temperature for storage	-	-40°C to 85°C (-40°F to 185°F)
Fire resistance	IEC 60695-2-11	850°C (1562°F)
Environmental characteristic	IEC 60068-2-11	Salt mist: 200 hours
Relative humidity	IEC 60068-2-30	95%
Operating altitude	-	≤ 3000 m (1.86 miles)

9.6.10 Voltage adapter

The voltage transformer adapter (EMS59572) is made with four resistor dividers used to interface conventional voltage transformers (VTs) with the PowerLogic P3 protection devices equipped for LPCT/LPVT sensors (order the sensors separately from Schneider Electric).

Connections

NOTICE

INCORRECT VOLTAGE MEASUREMENT

- The earth of the connection diagrams below must be the same of the whole PowerLogic P3 protection device. The 0 V of the PowerLogic P3 power supply input must be connected to this earth.
- The AC voltage adapter's earth connection point must be connected to the VT sensor's (LV transformer) isolated ground. For other wiring cases, consult Schneider Electric.

Failure to follow these instructions can result in measurement error.

Figure 239 - 3LN connection

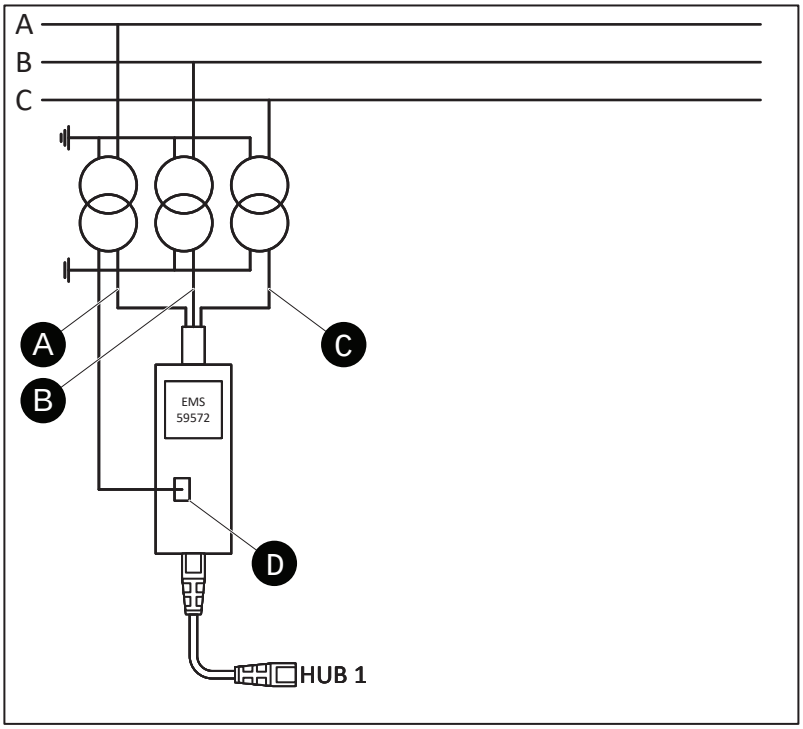

A. Phase A, black wire
B. Phase B, brown wire
C. Phase C, grey wire
D. Protective earthing (connected with green-yellow wire)

Figure 240 - 3LN/LNy connection

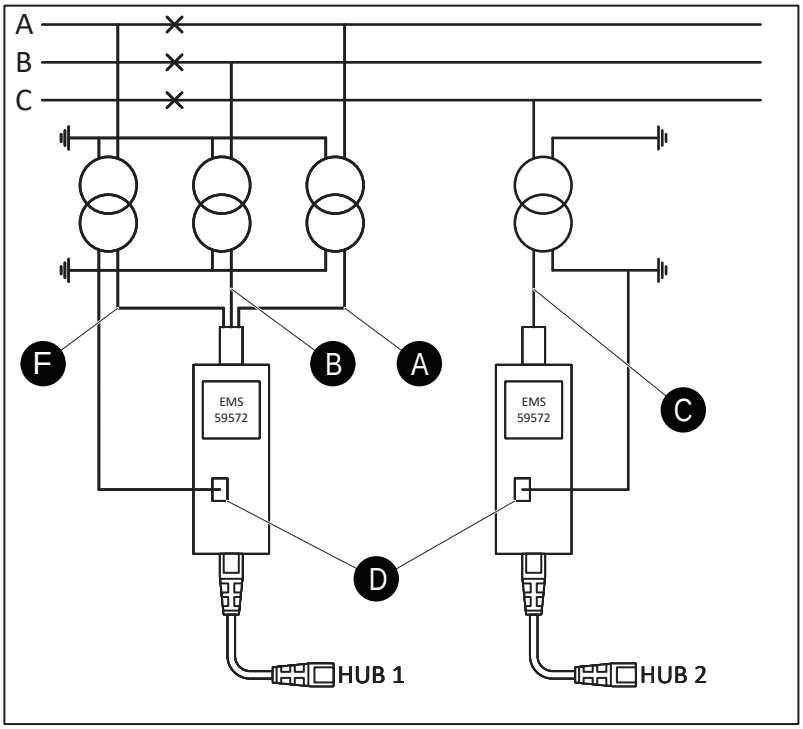

A. Phase A, black wire
B. Phase B, brown wire
C. Phase C, black wire
D. Protective earthing (connected with green-yellow wire)
F. Phase Ay, grey wire

Figure 241 - 3LN+U_0 connection

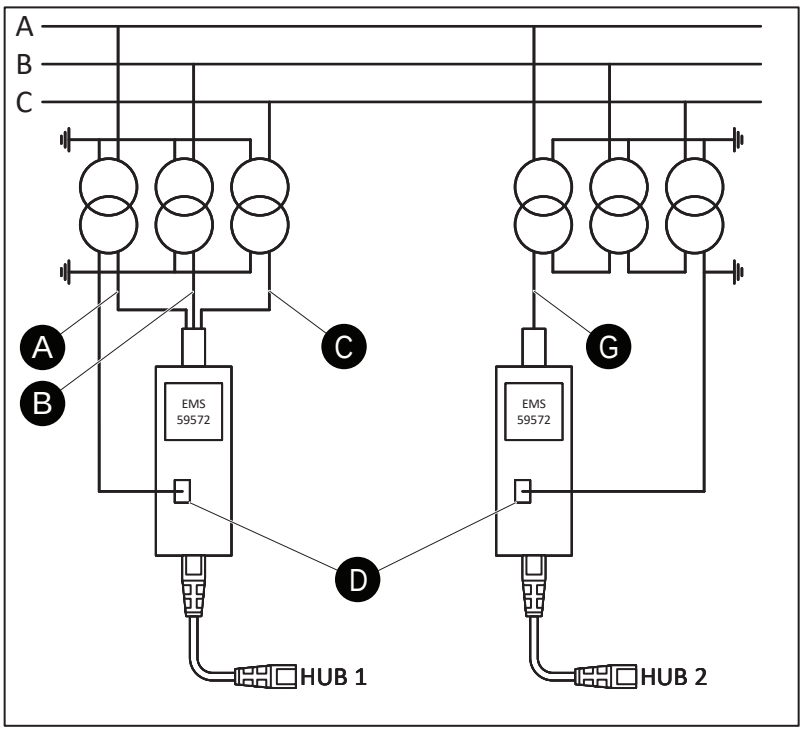

A. Phase A, black wire
B. Phase B, brown wire
C. Phase C, grey wire
D. Protective earthing (connected with green-yellow wire)
G. Broken delta voltage, black wire

Figure 242 - LN+U_0/LNy/LNz connection

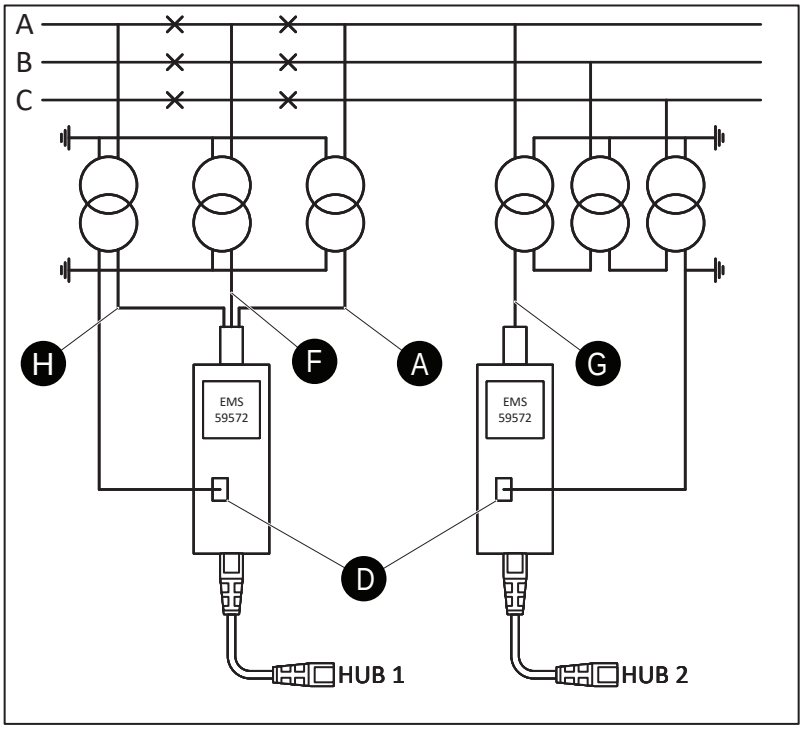

A. Phase A, black wire
F. Phase Ay, brown wire
H. Phase Az, grey wire
D. Protective earthing (connected with green-yellow wire)
G. Broken delta voltage, black wire

The Ethernet RJ45 cable is connected to the PowerLogic P3 protection device. The cable length is maximum 4 m (13.12 ft).

- CCA770 - 0.6 m (1.97 ft) (reference: 59660)
- CCA772 - 2 m (6.56 ft) (reference: 59961)
- CCA774 - 4 m (13.12 ft) (reference 59962)

NOTE: The voltage adapter is delivered with black, brown, grey and light blue cables. The light blue cable in the voltage transformer adapter input is not used.

Dimensions

Figure 243 - Voltage adapter dimensions

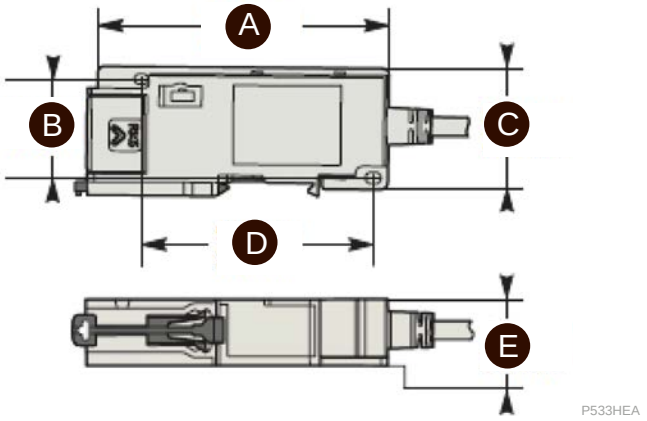

A. 120 mm (4.72 in)
B. 38 mm (1.49 in)
C. 52 mm (2.04 in)
D. 90 mm (3.54 in)
E. 25 mm (0.98 in)

9.6.10.1 Mounting the voltage adapter

There are three ways to mount the voltage adapter:

- DIN rail mounting
- Fastening with collar
- Mounting on Telequick grid

Figure 244 - Mounting on DIN rail

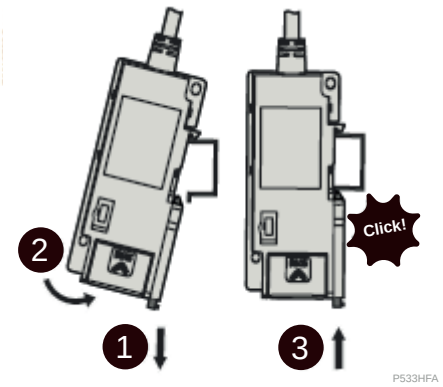

Mount the adapter by its fixture structure on rail.

Figure 245 - Fastening with collar

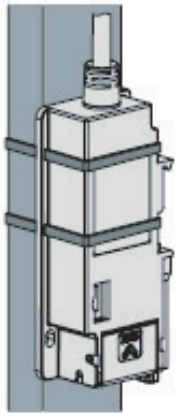

Mount the adapter using two fastening collars (width: 4 mm/0.16 in).

Figure 246 - Mounting on Telequick grid

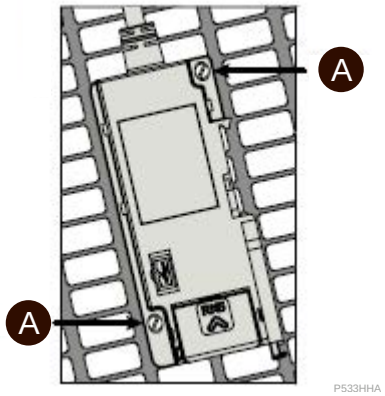

A. Screw

Mount the adapter on Telequick grid using two screws (4 mm/0.16 in).

9.6.10.2 RJ45 terminal locking

You can lock the voltage transformer adapter's RJ45 input in open or closed position by placing a seal in the hole marked with a lock symbol. This allows to lock the RJ45 connector of the Ethernet cable in its slot or helps to prevent its connection.

Figure 247 - Locked in closed position

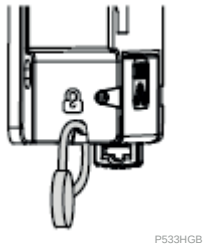

Figure 248 - Locked in open position

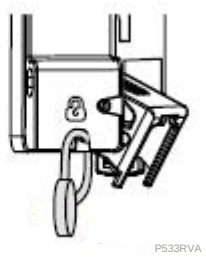

9.6.10.3 Voltage adapter parameters

Table 161 - Voltage adapter characteristics

Parameter	Standard	Value
Input voltage		50 V AC to 200 V AC (line-to-line)
Voltage max.		600 V max. permanent
Network frequency		50/60 Hz
Ambient air temperature for operation	IEC 60068-2-1 IEC 60068-2-2	-40℃ to 70℃ (-40℉ to 158℉)
Ambient air temperature for storage	IEC 60068-2-1 IEC 60068-2-2	-40℃ to 85℃ (-40℉ to 185℉)
Humidity	IEC 60068-2-30	95% HR; 144 hours (6 cycles of 12 hours at 55°C (131°F) and another 12 hours at 25°C (77°F))
Salt spray	IEC 60068-2-11	168 hours
Vibration	IEC 60068-2-6	10 Hz to 2000 Hz; 10 cycles at 2g (peak value)
Bump	IEC 60068-2-29	20 g/16 ms/1000 bumps, module de-energized
Shock	IEC 60068-2-27	10 Gn; 11 ms; 3 pulses, module in operation

Parameter	Standard	Value
Earthquake	IEC 60255-21-3	Class 2 - module in operation: 3 to 35 Hz/15 mm/2g/1 cycle Horizontal axe 3 to 35 Hz/7 mm/1g/1 cycle Vertical axe
High voltage withstand (dielectric)	IEC 60255-27	2 kV for 1 minute
Impulse voltage distance	IEC 60255-27	1.2 µs, 50 µs, 5 kV, 0.5J
Robustness	IEC 62262	IK7, 2J
Degree of protection	IEC 60529	IP20, module body (without wires)
Weight		150 g (0.33 lb)
Mounting support		Symmetrical DIN rail

9.6.11 RJ45 LPCT/LPVT plug (VW3A8306RC)

This RJ45 LPCT/LPVT plug is used when a sensor is not present to close the loop of the sensors presence detection. It could be used on LPVT hub inputs or on LPVT or LPCT P3x inputs.

Figure 249 - RJ45 LPCT/LPVT plug

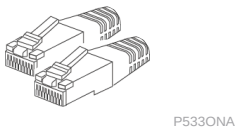

Its purpose is to close the loop of the sensor presence detection on pins 3-6 of the RJ45 and to zero the low voltage inputs shorting the 3 others pairs of the RJ45 connector. (1-2, 4-5, 7-8).

Figure 250 - Pairs of the RJ45 connector

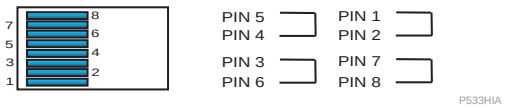

9.7 LPCT configuration

9.7.1 Introduction

This section gives an overview of some reasons to move from traditional CT to LPCT, what is an LPCT and how to configure them in eSetup Easergy Pro (at least V3.0.0).

Further details, such as how to wire the LPCT or the VT adapter is described in the *Installation* chapter.

NOTE: Passive Rogowski coils are not compatible with our LPCT input.

9.7.2 Benefits of LPCTs

In short, the use of Low Power Instrument Current Transformers brings many benefits through-out the project lifecycle, which are detailed below.

Personal safety is improved during testing and operation

With LPCT technology, due to its specific design, there is no risk in the event of accidental opening of the secondary circuit, as the output is always low voltage:

- The 1 A or 5 A ICT secondary current is replaced by either 22.5 mV, 150 mV, or 225 mV in LPCTs.
- As these secondaries can be left open or short-circuited without risk, there is no longer the need for short-circuit devices that were designed to mitigate those risks.

One LPCT can replace the needs of dedicated measurement and protection CTs

As LPCTs commonly saturate much later than Inductive Current Transforms (ICTs), they can allow fault measurement ranging from 5 kA to 80 kA primary.

The measurement accuracy of an LPCT could range from 5% of rated primary current to the extended primary current. It may be specified as class 0.1, 0.2, 0.5, or 1.

However, its protection accuracy could range from the extended primary current to the accuracy limit of primary current. It may be specified as either class 5P, 10P or 5TPE.

For example, a 100 A LPCT may be labelled as 0.5/5P 25000 A, meaning: M class = 0.5%, P class = 5P up to 25 kA (250 times primary current rating).

Because LPCTs have an extended rated primary current range, their application scope is much wider, the LPCT primary rating is no longer required to be as close as possible to the nominal current, and therefore no longer a major determining factor in specifications.

For measurement class

In this example, a multipurpose normalized LPCT with a 100 A rated primary current and a 1000 A extended primary current can be used in place of the 10 different ICTs with the following primary currents:

100, (125), 150, 200, (250), 300, (400), 500, (600), 750** (but not 1000**)

NOTE: ** An ICT has an extended primary current equal to only 120% of its rated current.

- 750 A x 1.2 = 900 A is below the 1000 A extended primary current.
- 1000 A x 1.2 = 1200 A is above the 1000 A extended primary current.

Figure 251 - LPCT measurement accuracies for primary currents

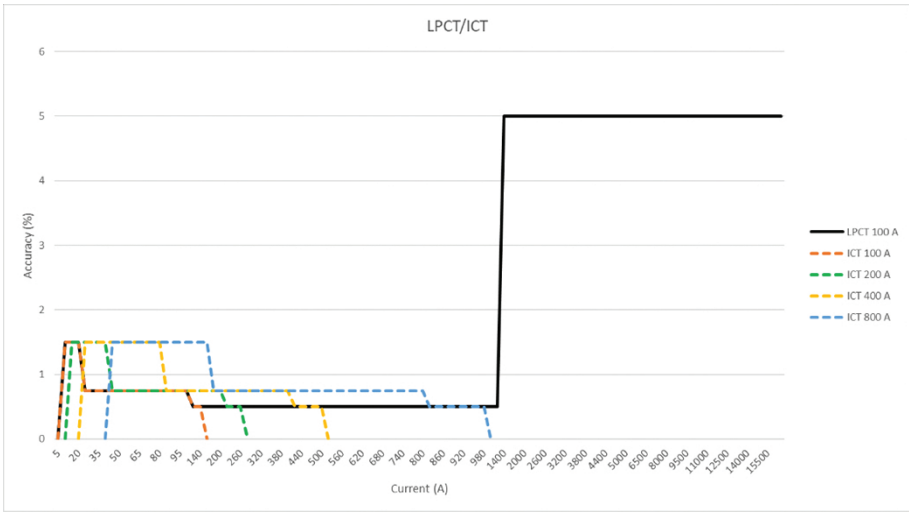

If we know that the initial nominal current to be measured is between 100 A and 750 A, we can order a 100 A rated LPCT with 1000 A extended primary current and still be flexible to last-minute changes or when load flow may increase subsequently.

For protection class

Same example, a multipurpose normalized LPCT with a 100 A rated primary current and a 1000 A extended primary current can be used in place of the 13 different ICTs with the following primary currents:

25, 50, 100, (125), 150, 200, (250), 300, (400), 500, (600), 750 and 1000

Figure 252 - LPCT protection accuracies for primary currents

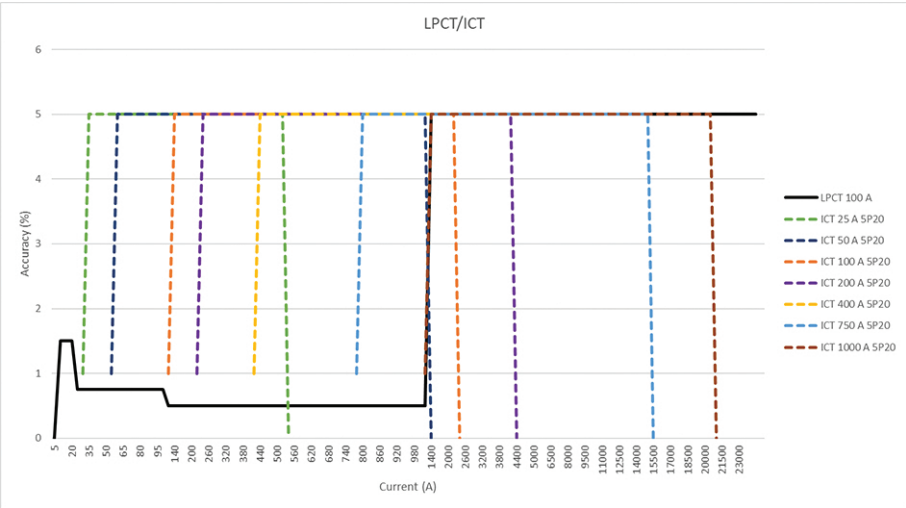

If we know that the initial nominal current for protection is between 25 and 1000 A, we can order a 100 A rated LPCT with 1000 A extended primary current and

still be flexible to last-minute changes or when load flow may increase subsequently.

Save time and money during project planning and execution

Standardized products can now be used with a wider range of application, providing faster and simpler integration. No longer do you need to wait for CT sizing clarifications, because fewer designs cover the majority of requirements, providing many other benefits.

- Reduced variation of ordering
- Simplified and improved quality of project documentation
- In-stock products with fast delivery
- Simplified installation

Compact switchgear with reduced footprint is more sustainable

The size and weight of the Low Power Current Transformers are reduced to less than 10% compared to ICTs. This allows future switchgear designs to be more compact, reducing materials used and the environmental impact. Switchgear handling, transport, installation and replacement are also much simplified.

9.7.3 LPCT characteristics

The multipurpose LPCT is designed to measure from 5% of Ipr to kalf x Ipr and is defined with a:

- Rated primary current (Ipr) (minimum current for measuring accuracy class)
- Rated extended primary current (Iepr = Ipr × Kpcr) (maximum current for measuring accuracy class)
- Rated accuracy limit (Ikpr = Ipr × kalf) (maximum current for protection accuracy class)

Figure 253 - Magnitude and phase errors across the measurement range

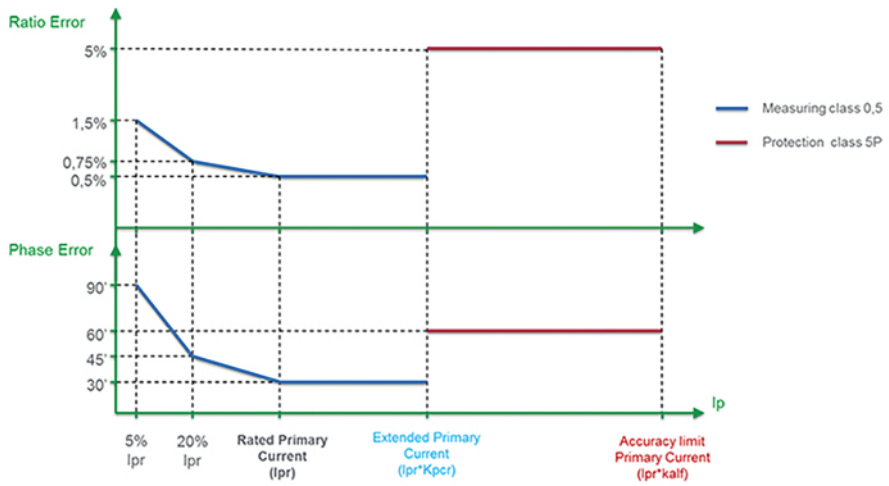

For example, the Schneider Electric LPCTs have the characteristics as shown below.

Table 162 - Characteristics of the LPCT

Characteristics	Ipr (A)	Iepr (A)	Ikpr (A)
CLV1	100	1250	16000
TLPU1	100	630	25000
TLP130	100	1250	25000
TLP160 or 190	100	2500	40000
CLP2 100 1250 40000	100	1250	40000
CLP3	100	2500	40000
CLP1	100	1250	50000

9.7.4 LPCT input characteristics

The LPCT input measuring range is 45 In. That means 25 In fully offset:

Figure 254 - Fault characteristic

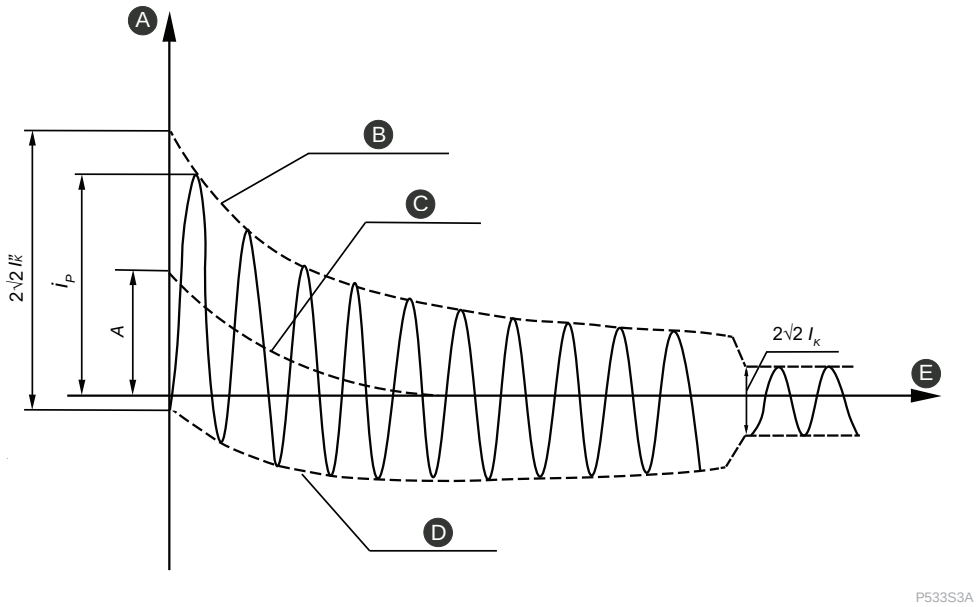

A. Current
B. Top envelope
C. $i_{d.c.}$
D. Bottom envelope
E. Time

NOTE:

- I''_K = initial symmetrical short-circuit current
- i_P = peak short-circuit current
- I_K = steady-state short-circuit current
- $i_{d.c.}$ = d.c. component of short-circuit current
- A = initial value of the d.c. component $i_{d.c.}$
- $2\sqrt{2}\ I''_K$ = For a fully offset fault current where I''_K is the rms of the initial fault current and $2\sqrt{2}\ I''_K$ is the peak to peak current
- $2\sqrt{2}\ I_K$ = the peak to peak value of the steady state short circuit current

The selection for the LPCT is done in eSetup Easergy Pro (at least V3.0.0), at the creation of the configuration file once the “Voltage measurement +I/O, X5” has been set to the option C in “Phase currents and voltage input X1:”.

Figure 255 - Selection of option C in X5

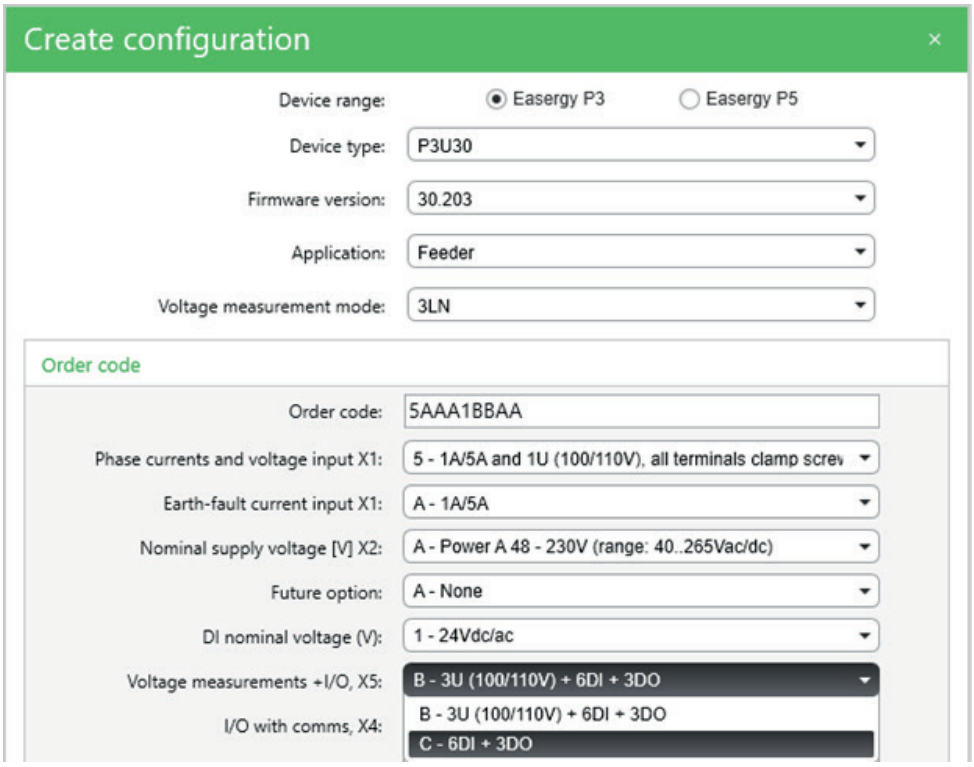

Figure 256 - Selection of LPIT option in X1

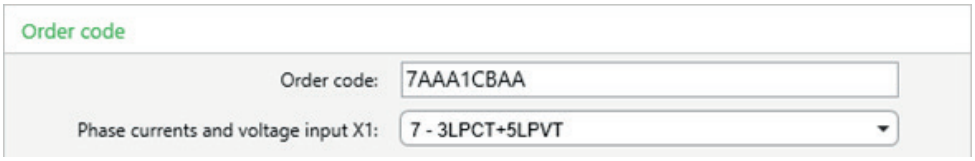

9.7.5 LPCT configuration procedure

Unlike CTs that need to meet the application CT requirements, LPCTs do not have any saturation. LPCT suitability needs to be calculated according to the two following main rules:

1. Select or check the LPCT suitability

   The maximum short circuit (IfMax) must be below the LPCT protection rated accuracy limit:

   - IfMax < Ikpr

2. In eSetup Easergy Pro (at least V3.0.0), under **GENERAL**/**Scaling** menu, you can find the LPCT setting.

   Figure 257 - LPCT setting

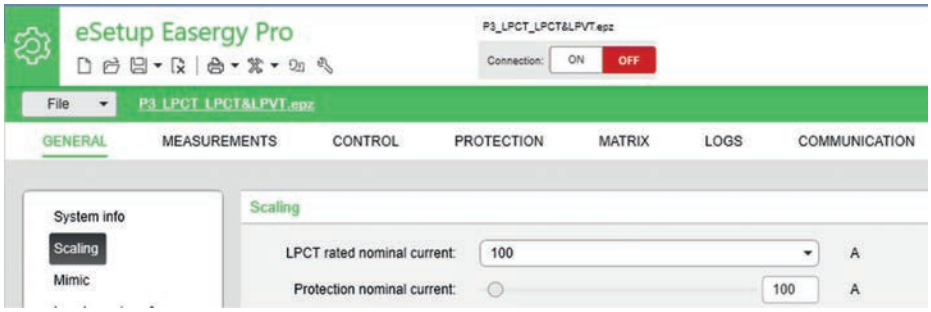

   The LPCT secondary nominal voltage (Usr) must be 22,5 mV.

   a. Select the LPCT rated primary current (Ipr) in “LPCT rated nominal current”.

   b. Set the primary nominal current (In) in “Protection nominal current”.

   The nominal current In is equal to (Ipr x Current factor)

   a. For LPCT secondary nominal voltage (Vsec) = 22.5 mV

      – Set the LPCT rated primary current (Ipr), for example 100 A
      – Then set the “Current factor” to adjust the nominal current, for example, 2 for In = 200 A or 4 for In = 400 A

   b. For other LPCT secondary nominal voltage (Vsec)

      – For (Vsec) = 150 mV select first 6.66 or for Vsec = 225 mA select first 10
      – Then set the LPCT rated primary current (Ipr) to (Ipr / Current factor)
      – Then finetune the “Current factor” to adjust the nominal current, for example, 5 instead of 6.66 for In = 75 A or 20 instead of 10 for 200 A

   The nominal current In must be:
   - Below the LPCT rated accuracy limit divided by 25: In < Ikpr/25
   - Below the LPCT rated extended primary current: In < Iepr whenever possible
   - Above 20% of the LPCT rated primary current In > Ipr/5
   - As close as possible to the nominal load current. It does not need to be among the standardized values.

For example, with a multipurpose LPCT with a 100 A rated primary current, a 1250 A extended primary current and an accuracy limit of 16000 A:

Example 1: Maximum short circuit of 10 kA and a nominal current of 200 A

1. The maximum short circuit must be below the LPCT rated accuracy limit:
   - IfMax < Ikpr: 10 kA < 16 kA (OK)
2. The maximum nominal current to be set in the P3 relay must be:
   - Below the LPCT rated accuracy limit / 25: In < Ikpr/25: 16000/25 = 640 A (OK)
   - Below the LPCT rated extended primary current: In < Iepr: < 1250 A (possible)
   - Above 20% of the LPCT rated primary current In > Ipr/5: 20 A (OK)
   - As close as possible to the nominal load current and among the standardized values: 100, (125), 150, 200, (250), 300, (400), 500, (600), 750, 1000 and (1250).

     200 A can be chosen (fine for measurement and protection).

Example 2: Maximum short circuit of 20 kA and a nominal current of 400 A

1. The maximum short circuit must be below the LPCT rated accuracy limit:
   - IfMax < Ikpr: 20 kA < 16 kA

   This is NOT OK. A different LPCT must be chosen. For example, a multipurpose LPCT with a 100 A rated primary current, a 1250 A extended primary current and an accuracy limit of 25000 A.
2. The maximum nominal current to be set in the P3 relay must be:
   - Below the LPCT rated accuracy limit / 25: In < Ikpr/25: 25000/25 = 1000 A (OK)
   - Below the LPCT rated extended primary current: In < Iepr: < 1250 A (possible)
   - Above 20% of the LPCT rated primary current In > Ipr/5: 20 A (OK)
   - As close as possible to the nominal load current and among the standardized values: 100, (125), 150, 200, (250), 300, (400), 500, (600), 750, 1000 and (1250).

     400 A can be chosen (fine for measurement and protection)

Example 3: Maximum short circuit of 50 kA and a nominal current of 1500 A

1. The maximum short circuit must be below the LPCT rated accuracy limit:
   - IfMax < Ikpr: 50 kA < 16 kA

   This is NOT OK. A different LPCT must be chosen. For example, a multipurpose LPCT with a 100 A rated primary current, a 1250 A extended primary current and an accuracy limit of 50000 A.
2. The maximum nominal current to be set in the P3 relay must be:
   - Below the LPCT rated accuracy limit / 25: In < Ikpr/25: 50000/25 = 2000 A (OK)
   - Below the LPCT rated extended primary current: In < Iepr: < 1250 A (not possible but optional)
   - Above 20% of the LPCT rated primary current In > Ipr/5: 20 A (OK)
   - As close as possible to the nominal load current and among the standardized values: 250, 500, 1000, (1250), 1500, 2000, (2500), 3000.

     2000 A can be chosen (fine only for protection)

9.8 LPVT configuration

9.8.1 Introduction

This section gives an overview of LPVTs, reasons to move from traditional VTs to LPVTs, and how to configure them in eSetup Easergy Pro (at least V3.0.0).

Further details, such as how to wire the LPCT or the VT adapter is described in the *Installation* chapter.

9.8.2 Benefits of LPVTs

In short, the use of Low Power Voltage Transformers brings many benefits throughout the project lifecycle, which are detailed below.

Personal safety is improved during testing and operation

With LPVT technology, there is no risk in the event of touching the secondary circuit as the output is low voltage.

With LPVT technology, the output is low voltage.

- The VT (phase to neutral) secondary rated voltages, ranging from 57.73 V to 69.3 V and/or 115.47 V to 132.79 V, are now reduced to 1.88 V (3,25/√3 V) in LPVTs.
- As the risk of short-circuited secondary disappears, it also removes the need for VT fuses.
- The effect of ferroresonance has disappeared as well.

One LPVT can replace the need of several nominal voltage rated VTs

An LPVT is now defined for a wider range of ratings compared to an Inductive Voltage Transformer (IVT), for example, 3 to 20 kV, class 0.5P, from 2% to 190% of its rated voltage which is better than the former 0.5 / 3P classification.

Figure 258 - LPVT accuracies for primary voltages

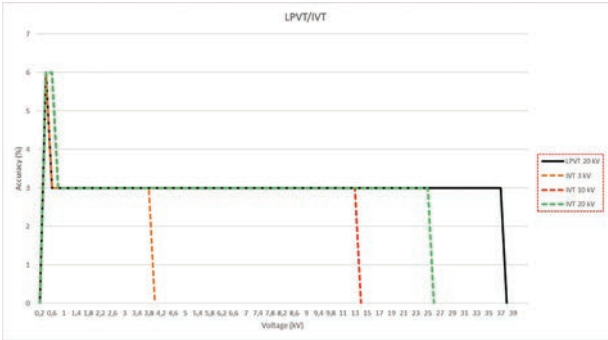

For protection, the above LPVT can be used in place of the 5 different VTs with the following primary voltages (in kV): 3, 6, 10, (15), 20.

Save time and money during project planning and execution

Standardized products can now be used with a wider range of application, providing faster and simpler integration. No longer do you need to wait for sizing clarifications, because fewer designs cover the majority of requirements, providing many other benefits.

- Reduced variation of ordering
- Simplified and improved quality of project documentation
- In-stock products with fast delivery
- Simplified installation

Compact switchgear with reduced footprint is more sustainable

The size and weight of the Low Power Voltage Transformers are reduced to less than 10% compared to IVTs. This allows future switchgear designs to be more compact, reducing materials used and the environmental impact. Switchgear handling, transport, installation and replacement are also simplified.

9.8.3 LPVT characteristics

The multipurpose LPVT is designed to measure from 2% of Vpri (min) to 1.9 x Vpri (Max) and is typically defined with a:

- Rated primary voltage Vpri
- Range of rated primary voltage (Vprimin, VpriMax) (minimum and maximum voltage for measuring and protecting accuracy classes)
- Rated secondary voltage Vsec

Figure 259 - Magnitude accuracy

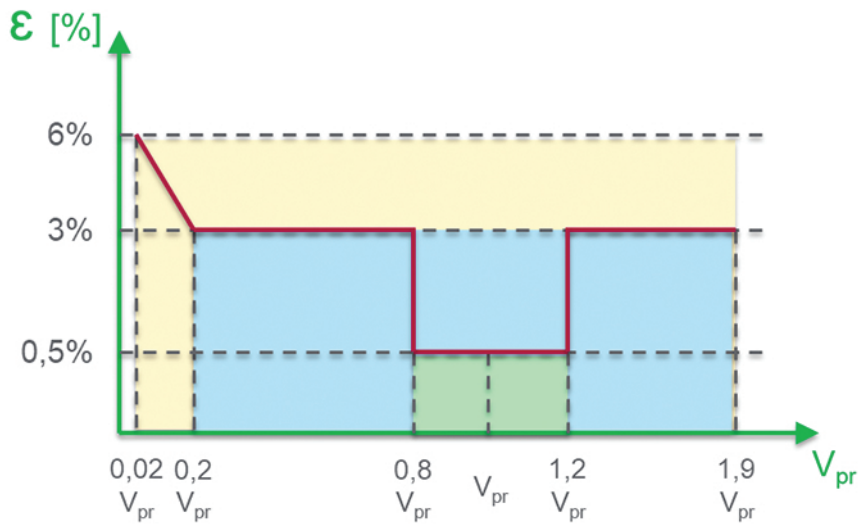

Figure 260 - Phase accuracy

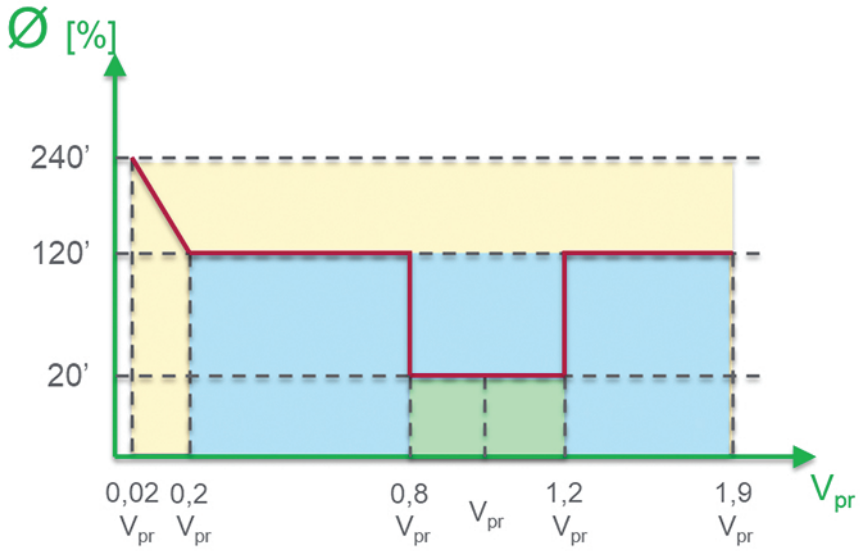

For example, the Schneider Electric LPVTs have the following characteristics.

Table 163 - Characteristics of the LPVT

Characteristics	Vpri (kV)	Vprimin (kV)	VpriMax (kV)	VpriMax/Vpri
Ref.1	10	2.4	11	1.1
Ref.2	20	3	20	1
Ref.3	20	10	22	1.1
Ref.4	30	20	33	1.1

NOTE: The LPVTs need to be connected to the P3 by the LPVT hub connector, the figure below shows the look of LPVT hub connector. See the*9.6.9 LPVT hub connector (reference EMS59573)* section for supplementary information on this topic.

Figure 261 - LPVT hub connector

9.8.4 LPVT input characteristics

The PowerLogic P3 LPVT input measuring range is above 1.5 x 1.9 x Vsec (with 1.5 the biggest ratio between VpriMax and Vpri).

PowerLogic P3 can be connected to either an LPVT or a VT (thanks to the EMS59572 adapter).

The selection for the LPVT is done in eSetup Easergy Pro (at least V3.0.0), at the creation of the configuration file once the “Voltage measurement +I/O, X5” has been set to the option C in “Phase currents and voltage input X1:”:.

Figure 262 - Selection of option C in X5

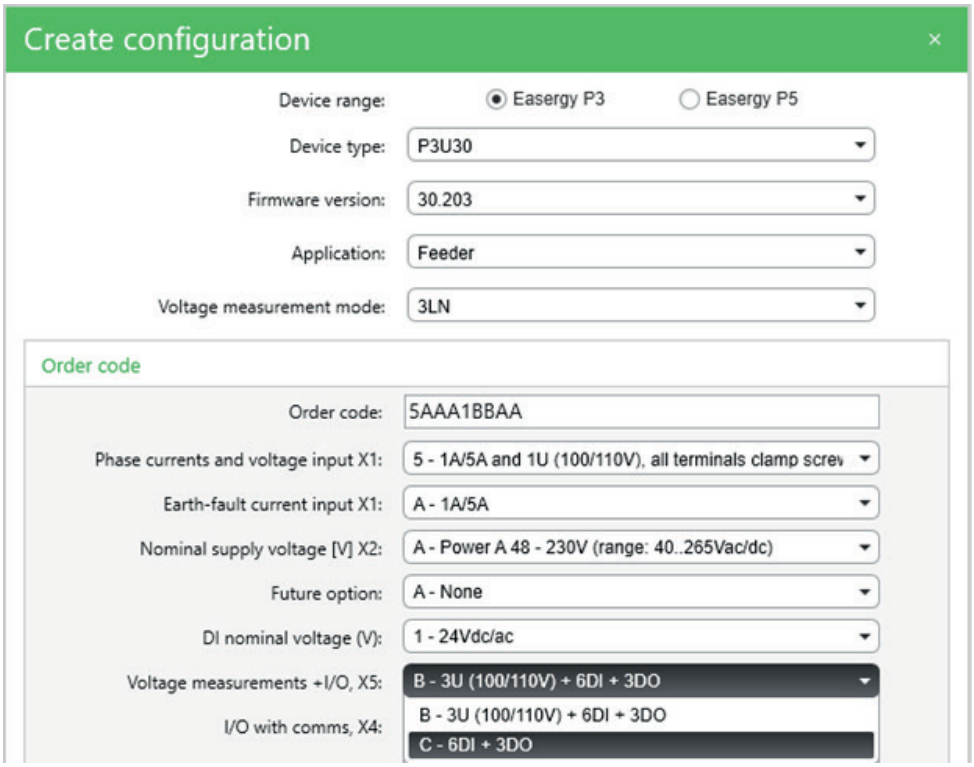

Figure 263 - Selection of LPIT option in X1

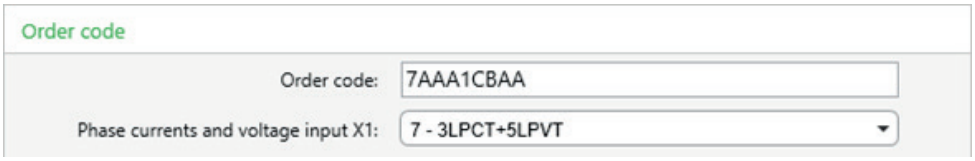

9.8.5 LPVT configuration procedure

Two main simple rules are required to follow:

1. Select or check the LPVT suitability. The nominal voltage (Vn) must be within the LPVT range of rated primary voltage: Vprmin < Vn < VprMax
2. In eSetup Easergy Pro (at least V3.0.0), under **GENERAL**/**Scaling** menu, LPVTs are designed to be connected to devices with different measuring input burden.

Figure 264 - LPVT settings

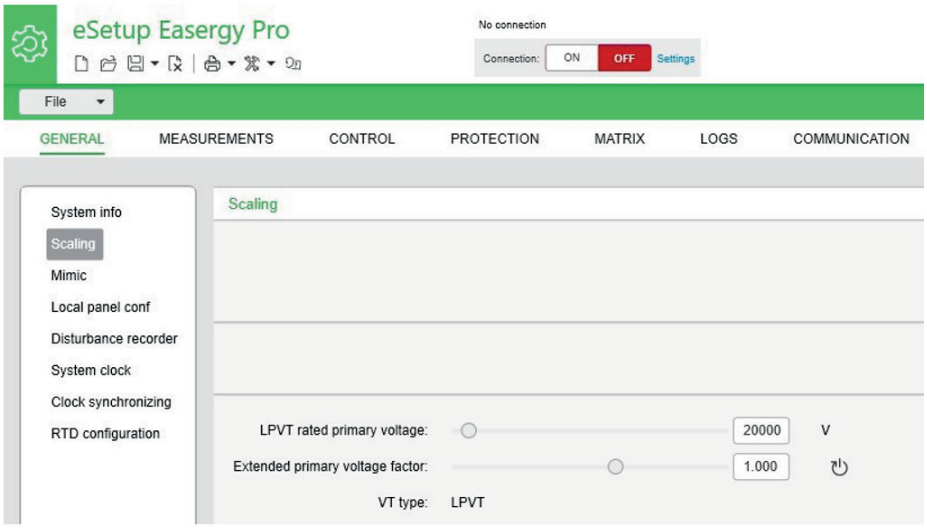

a. For both 2 MΩ (IEC 61869-11) and 10 MΩ (for example, Schneider Electric) LPVT output burden

   – Set the LPVT Rated primary Voltage (Vpri) in “LPVT rated primary voltage”
   – Set the nominal voltage (Vn) in “Network voltage”

b. Only for 2 MΩ (IEC 61869-11) LPVT output burden

   Figure 265 - Correction factors

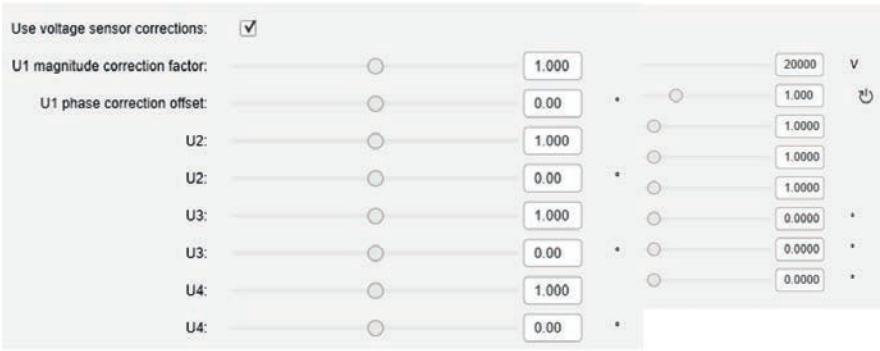

   – Measure the resistance of R_2 for each LPVT (RJ45 output pin 7&8)
   – Set for each phase “Vx magnitude correction” to:
     – $((R_2+10000)/(R_2+2000))/5$ with R_2 in kΩ
     – For example, if R_2 = 32.51 kΩ then Vx correction = 0.987

Figure 266 - Resistive divider

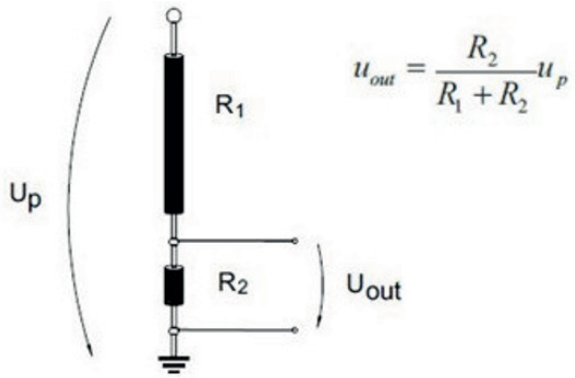

9.9 LPVT configuration with VT adapter

9.9.1 Introduction

This section gives an overview of some reasons to use the EMS59572 adapter, what it is, and how to configure it in eSetup Easergy Pro (at least V3.0.0).

Further details, such as how to wire the LPCT or the VT adapter is described in the *Installation* chapter.

9.9.2 Benefits of VT adapter

Traditionally, a protection relay is either designed to be connected to CTs and VTs or LPCTs and LPVTs. When the switchgear is equipped with LPCTs and VTs, it is easier to adapt the VT outputs to low level signals compatible with the relay LPVT inputs.

9.9.3 EMS59572 adapter characteristics

The VT (phase to neutral) secondary rated voltages, ranging from 57.73 V to 69.3 V and/or 115.47 V to 132.79 V, need to be converted to signals close to the rated 1.88 V (3,25/√3 V) in LPVTs.

The EMS59572 adapter is made of resistive dividers to connect VTs to the PowerLogic P3 LPVT inputs. See the *Voltage adapter* section for supplementary information on this topic.

Figure 267 - EMS59572 adapter

The nominal ratio is 50.6 and the accurate ratios are written on its label for each phase.

9.9.4 LPVT input characteristics

The PowerLogic P3 LPVT input measuring range is above 1.9 x 132.79 / 50.6 = 5 V.

It can be connected to either a LPVT or a VT by the EMS59572 adapter.

The selection to connect VT through the dedicated EMS59572 is done in eSetup Easergy Pro (at least V3.0.0), after the creation of the configuration file, once the “Phase currents and voltage input X1:” has been set to the LPIT option:.

Figure 268 - Settings of the LPIT option

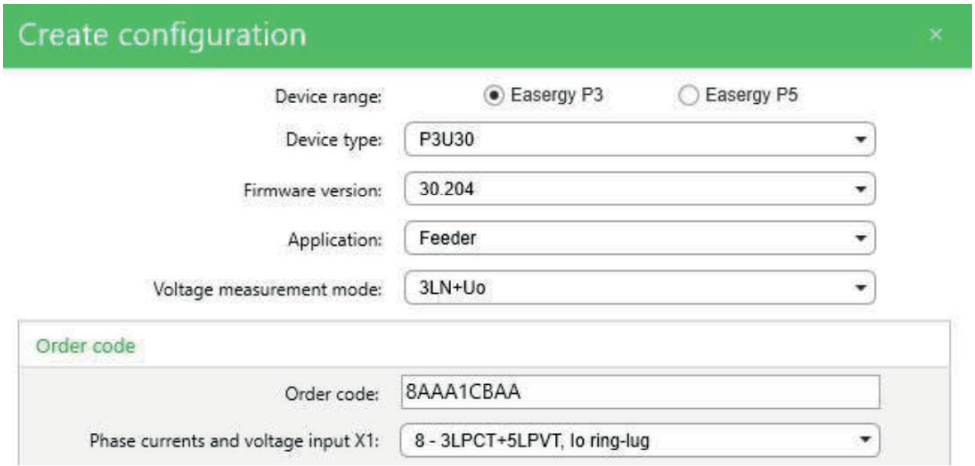

In General/Scaling, click the “Use voltage sensor corrections” option:

Figure 269 - Selection of the VT adapter

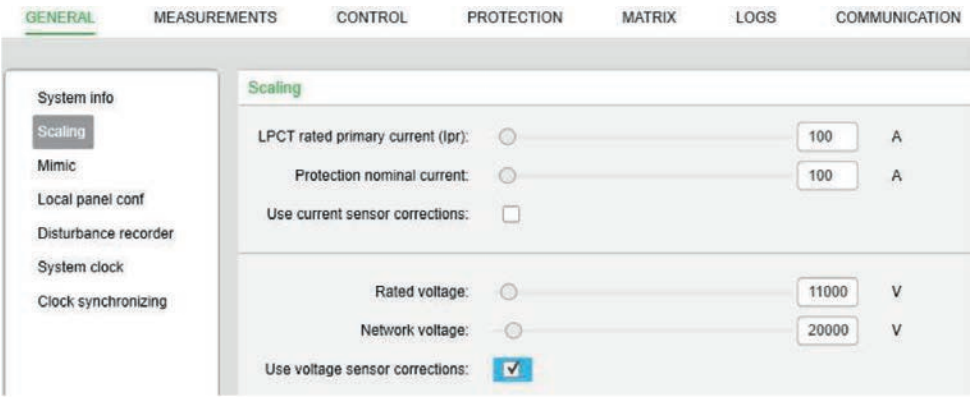

NOTE: The above dedicated EMS59572 VT adapter configuration window will only appear once a relay is connected.

9.9.5 EMS59572 VT adapter configuration

The voltage adapter EMS59572 can be used to connect the conventional VT to the P3 relay with LPVT input.

The provided settings accommodate the conventional VT primary and secondary voltages, the network voltage and the relay LPVT input rated voltage the way the relay can operate correctly.

Figure 270 - Settings of the VT adapter

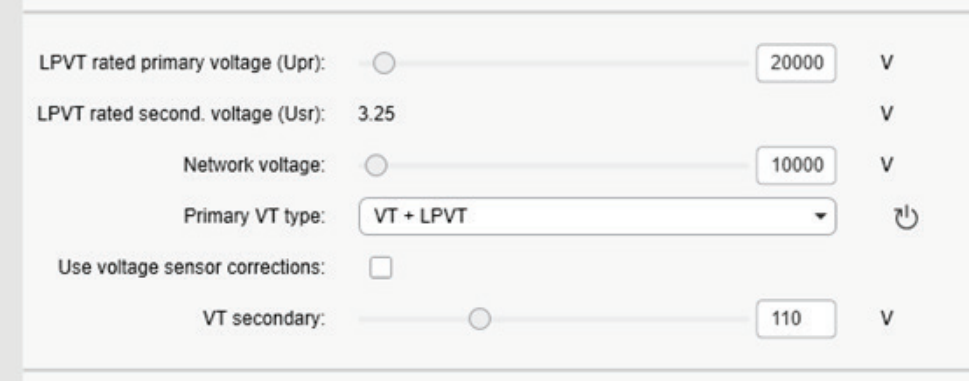

- The LPVT rated primary voltage and network voltage must reflect the VT rated primary voltage.
- The VT secondary voltage must reflect the VT rated secondary voltage.

9.10 LPVT voltage sharing application

Similarly to conventional scheme, LPVT signals can be shared across multiple PowerLogic P3 protection relays (up to 10 per LPVT transducer). All connections are made with screened RJ45 cables resilient to potential electromagnetic disturbances met in medium voltage compartments.

LPVT transducer (P7M12025)

The LPVT Transducer allows an accurate transmission of the low voltage output signal from LPVT sensors (3.25/√3 V) across up to 10 PowerLogic P3 protection relays equipped with LPVT measuring inputs. The low voltage input is provided through a single RJ45 connector that brings the 3 phase LPVT signals merged by LPVT hub connector EMS59573. P7M12025 can be installed on DIN rails complying with EN/IEC 60715.

The connections between all the elements are done with RJ45 wires that can be ordered with commercial references: 59660 (0.6 m) 59661 (2 m), 59662 (4 m). The branching between LPVT bus and each PowerLogic P3 protection relay is done with a 3-way RJ45 junction box (T-box) REL51095.

Table 164 - Characteristics of LPVT transducer

Order code	Description
Nominal voltage input / output	1.876 V (3.25/√3 V) / 1.876 V (3.25/√3 V)
Voltage factor	1.2 nominal voltage continuously 1.9 nominal voltage for 8 hours
Accuracy	Measurement class 0.5 Protection class 3P Input burden 10 MΩ // 2.2 pF For -5°C...+40°C
Power supply	24...48 V DC, 125 V DC or 120 V AC
Operating temperature	-25°C...+70°C
Dimensions (L x W x H)	160 x 60 x 90 mm (6.30 x 2.36 x 3.54 in)

Figure 271 - LPVT transducer

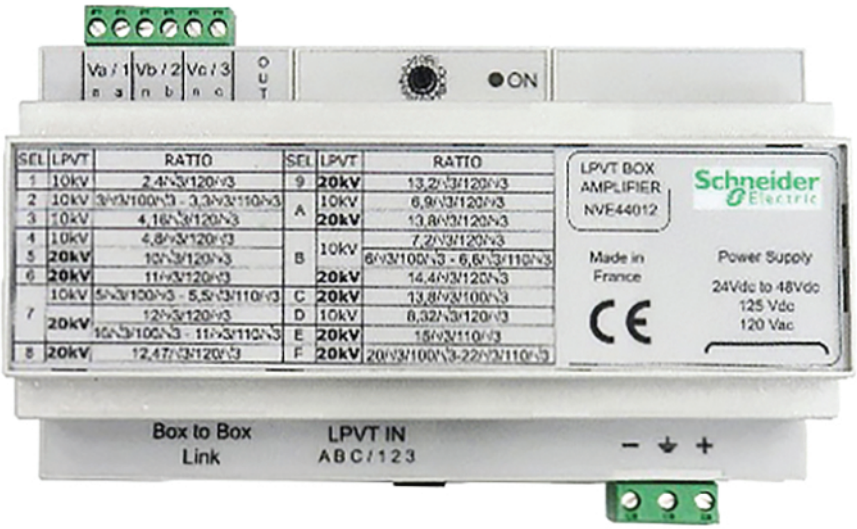

Voltage sharing applications

For LPVTs voltage sharing applications, refer to the following cases.

Figure 272 - LPVT sharing application without test sockets/plugs

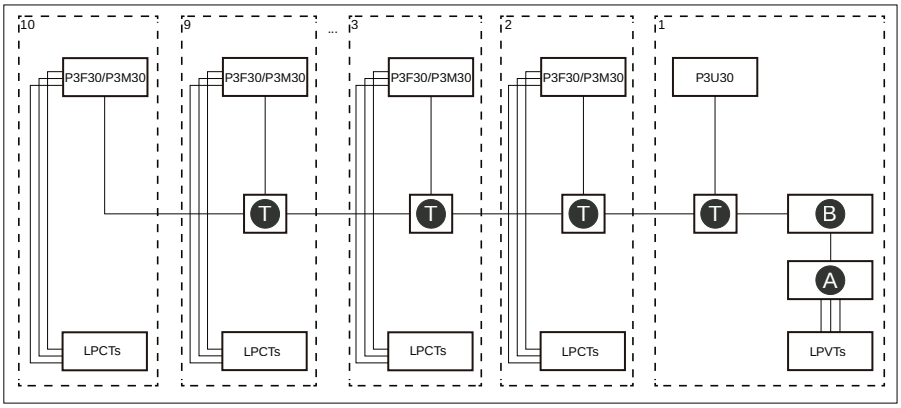

A	LPVT hub connector	EMS59573	B	LPVT transducer	P7M12025
T	T-box 3 way RJ45 junction	REL51095			

- 0.6 m remote module connection cord: 59660
- 2 m remote module connection cord: 59661
- 4 m remote module connection cord: 59662

Figure 273 - LPVT sharing application including the 4th voltage (sync-check) and with test sockets/plugs

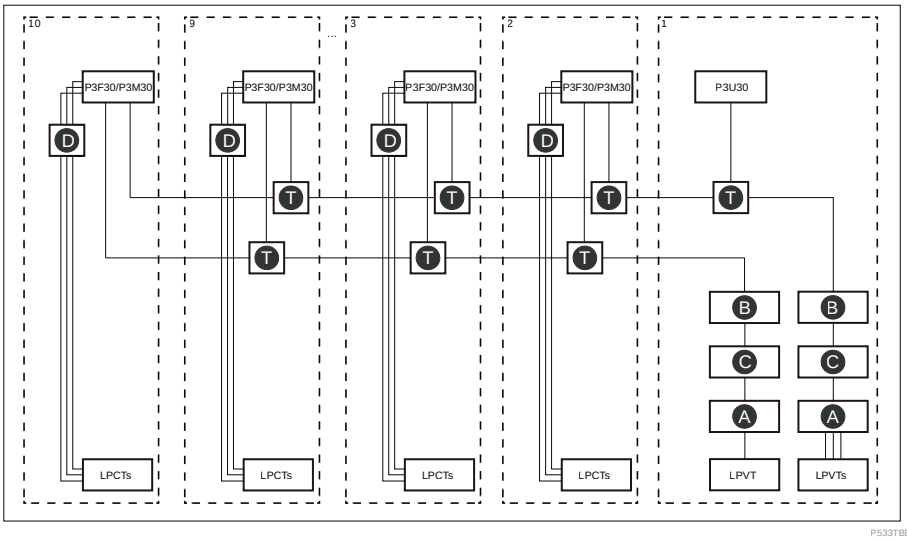

A	LPVT hub connector	EMS59573	B	LPVT transducer	P7M12025
C	LPVT test plugLPVT test socket with cover	REL51093RE L51092	D	LPCT test plugLPCT test socket with cover	REL51090R EL51089
T	T-box 3 way RJ45 junction	REL51095			

9.11 Low-power instrument transformer testing

These tests verify that the accuracy of the low-power instrument transformer (LPIT) measurements are within acceptable tolerances.

Figure 274 shows the connection diagram that includes the PowerLogic P3 protection relay and a low-frequency generator as described in *9.11.1 Testing tools and equipment*.

NOTE: To avoid any slow fluctuation of current measurements during testing, disconnect the signal generator earth/ground link or use an isolator transformer.

Figure 274 - Connection diagram for testing the LPIT

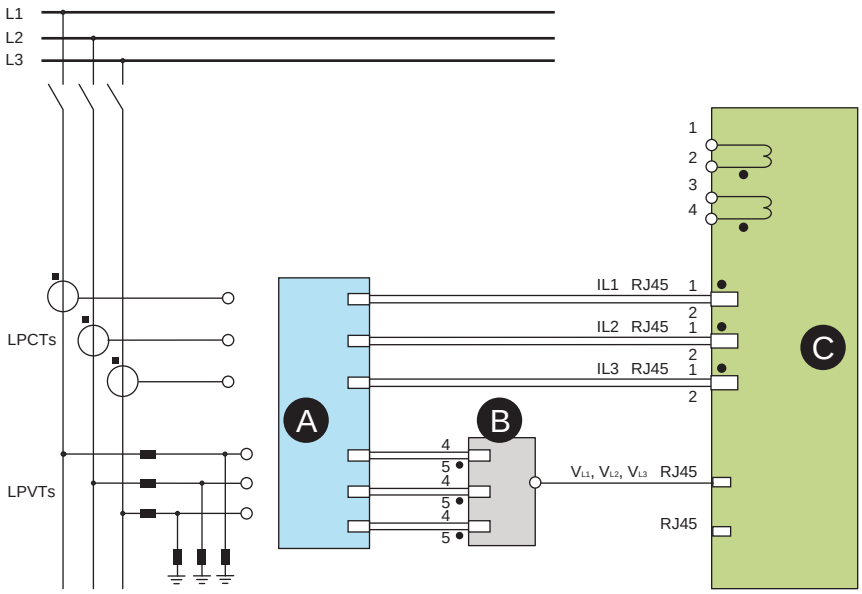

A. Voltage generator **C.** PowerLogic P3 connector A
B. LPVT hub

9.11.1 Testing tools and equipment

The following tools and equipment are needed in the commissioning:

- AC current and voltage injection sources
  - For the secondary injection test on LPCT and LPVT, to check the protection relay functions, the injection source should be at such a rating that the voltage is adjustable up to at least 10 V for LPVT and at least 30 V for LPCT to be able to test with the maximum setting ranges.
  - If the primary injection test is necessary to check the CT/LPCT, VT/LPVT primary connection and polarity, the injection source should be at such a

rating that the minimum current at the CT secondary is larger than 20 mA (2% of the nominal current) and the minimum voltage at the secondary is larger than 750 mV (1% of the nominal voltage).

- For LPCT/LPVT, test plug for secondary injection testing:
  - cable with RJ45 terminal compliant with IEC 61869-10/11, with pins 3–6 shorted on the protection device end to enable sensor channel measurements
  - LPVT hub connector (to be used if the LPVT hub connector installed in the cubicle is not accessible)

9.11.2 Testing the low-power current transformer measurements

This test verifies that the accuracy of the low-power current transformer (LPCT) measurement is within acceptable tolerances.

1. Disconnect the LPCT secondary from the PowerLogic P3 device.
2. Use a generator with low-voltage output (maximum 30 V), and connect it directly to the PowerLogic P3 device as described in *9.11.1 Testing tools and equipment*.
3. Apply voltage equal to the related LPCT rated secondary voltage.
4. Check its magnitude using a multimeter or reading from the test equipment.
5. Check the current magnitude displayed on the local panel of the PowerLogic P3 device.
6. Calculate the LPCT measurement accuracy, it shall be within ±1%.

   NOTE: To be sure everything is well reconnected after the test, perform a primary injection at low level.

9.11.3 Testing the low-power voltage transformer measurements

This test verifies that the accuracy of the low-power voltage transformer (LPVT) measurement is within acceptable tolerances.

1. Disconnect the secondary of LPVTs from the LPVT hub.

   If the LPVT hub is not accessible inside the cubicle, disconnect the secondary of the LPVT hub from the PowerLogic P3 device, and connect another one to replace it during the tests.
2. Use a generator with low voltage output (10 V max) and connect it directly to the LPVT hub as described in *9.11.1 Testing tools and equipment*.

   NOTE: If you have only one cable connected to the LPVT hub, you must use the provided termination accessory in the empty channels to enable measurement.
3. Apply voltage equal to the related LPVT rated secondary voltage.
4. Check its magnitude using a multimeter or reading from the test equipment.
5. Check the voltage magnitude on the local panel of the PowerLogic P3 device.
6. Calculate the LPVT measurement accuracy.

   It must be within ±1%.

NOTE: To be sure everything is well reconnected after the test, perform a primary injection at low level.

9.12 Testing with LPIT test box (reference REL51037)

⚠⚠ DANGER

HAZARD OF ELECTRIC SHOCK, EXPLOSION OR ARC FLASH

- This equipment must be only be installed and serviced by qualified electrical personnel.
- Turn off all power supplying this equipment before working on or inside it.
- Always use a properly rated voltage sensing device to confirm that all power is off.
- Apply appropriate personal protective equipment (PPE) and follow safe electrical work practices.
- Do not install this product in ATEX zone 0 or 1 areas.

Failure to follow these instructions will result in death or serious injury.

9.12.1 Introduction

The secondary injection tests can be carried out with the LPIT test box. This test box is an adapter for secondary testing of PowerLogic P3 protection relays with LPCT/LPVT measuring inputs. It is an interface between the OMICRON[103)] testing kit's low-power outputs and PowerLogic P3 inputs. Thanks to this adapter, the testing is comfortable and the right accuracy in the entire measuring range is ensured. For the LPCT signal testing, the LPIT Test Box offers 4 sets of current and 2 sets of voltage outputs depending on the measuring ranges tested. The LPIT test box is delivered with all cables required to perform the tests.

The OMICRON CMC 356, CMC 256plus and CMC 353 low level output allows 2 sets of three phase injections (LL1,2,3 and/or LL4,5,6).

The injection accuracy of these outputs is 0.07% from 0.71 V to 7.10 V (phase to neutral).

The overall accuracy (OMICRON + LPIT test box) is 0.25%[104)] from 0.71 V to 7.10 V (phase to neutral).

Figure 275 - LPIT test box

103) Omicron is a trademark of OMICRON Electronics GmbH, Oberes Ried 1, 6833 Klaus, Austria
104) Typical value at 25℃ and variable in range of ultimate operation temperature 0℃-50℃.

For the order code of the LPIT test box, refer to *9.12.8 Order codes for LPCT/ LPVT accessories* section for details.

The LPIT test box can be connected to the OMICRON low-level outputs with 3 inputs as shown below.

Figure 276 - The rear panel of LPIT test box

The LPIT test box can output different voltages in relation to the rated voltages of LPCTs (22.5 mV or 225 mV) and/or LPVTs (3.25 V (phase to phase)/1.88 V (phase to neutral)) linked to the three inputs shown above.

Figure 277 - The front panel of LPIT test box

Table 165 - Output ports on LPIT test box front panel

Current/ voltage	IA	IB	IC	IA,B,C	IA	IB	IC	IA,B,C	VA,B,C	VA,B,C
InputOutput	2 V225 mV				1 V22.5 mV				1.88 V1.88 V	1.88 V1.88 V
LPCT/ LPVT	LPCT Input 1 (a: LL 1,2,3)				LPCT Input 1 (b: LL 4,5,6)				LPVT (2a)	LPVT (2b)
Port	1	2	3	4	5	6	7	8	9	10
	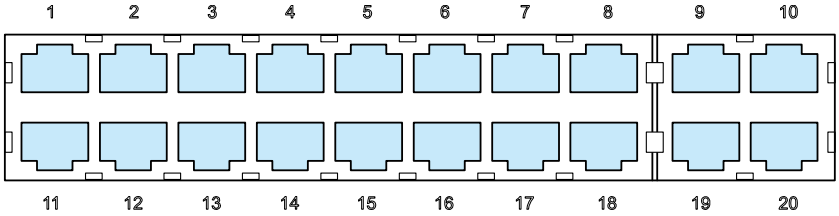									
Port	11	12	13	14	15	16	17	18	19	20
LPCT/ LPVT	LPCT Input 3 (a: LL 1,2,3)				LPCT Input 3 (b: LL 4,5,6)				LPVT (2c)	Test

Current/ voltage	IA	IB	IC	IA,B,C	IA	IB	IC	IA,B,C	VA,B,C	
InputOu tput	2 V22.5 mV				1 V1 V				1 V1 V	Pin1 to 8

NOTE: The 20th RJ45 is not an output but an input. As an example, it distributes its pins to the pin connections listed below of the LPIT output for test purposes. See *9.12.6 Test input (20th RJ45)* section for more details.

The outputs 1, 2, 3, 5, 6, 7, 11, 12, 13, 15, 16 and 17 are dedicated to single phase LPCT direct injections to IEDs.

The outputs 4, 8, 14 and 18 are dedicated to three phase LPCT injections through ESSAILEC® test plugs.

The outputs 9, 10 and 19 are dedicated to three phase LPVT injections.

When Input 1 is used, the possible LPCT outputs are:
- 2 V OMICRON outputs 1 to 3 to 225 mV scaling for outputs 1 to 3 (single phase) and 4 (three phase) LPCT
- 1 V OMICRON outputs 4 to 6 to 22.5 mV scaling for outputs 5 to 7 (single phase) and 8 (three phase) LPCT

When Input 2 is used, the possible LPVT outputs are:
- 3.25 V/1.88 V OMICRON outputs 1 to 3 with no scaling for outputs 9 (three phase) LPVT
- 3.25 V/1.88 V OMICRON outputs 4 to 6 with no scaling for outputs 10 (three phase) LPVT

When Input 3 is used, the possible LPCT and LPVT outputs are:
- 2 V OMICRON outputs 1 to 3 to 22.5 mV scaling for outputs 11 to 13 (single phase) and 14 (three phase) LPCT
- OMICRON outputs 4 to 6 with no scaling for outputs 15 to 17 (single phase) and 18 (three phase) LPCT and 19 (three phase) LPVT

9.12.2 LPCT/LPVT testing diagram

There are two cases for LPCT/LPVT testing:
- direct testing without test socket/plugs
- with test socket/plugs

Figure 278 - LPCT/LPVT direct testing without test sockets/plugs

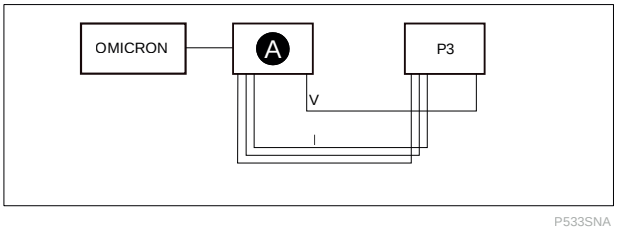

A	LPIT test box	REL51037

NOTE:
- For current, use 1st/2nd/3rd connector of each scaling block.
- Test cables are connected in place of LPCT/LPVT cables during the testing.
- To find out the order codes, refer to *9.12.8 Order codes for LPCT/LPVT accessories* section for details.

.

Figure 279 - LPCT/LPVT testing with test sockets/plugs

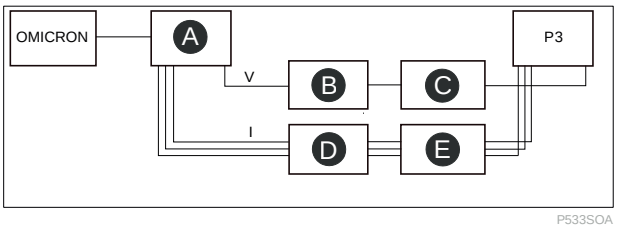

A	LPIT test box	REL51037	B	LPVT test plug	REL51093
C	LPVT test socket (with cover)	REL51092	D	LPCT test plug	REL51090
E	LPCT test socket (with cover)	REL51089			

NOTE:
- For current, use 4th connector of each scaling block.
- To find out the order codes, refer to *9.12.8 Order codes for LPCT/LPVT accessories* section for details.

9.12.3 Current injection test

For a 22.5 mV rated LPCT

1. From 0 to 3.5 In with accuracy needed from 0.35 In to 3.5 In
   - Connect to input 3
   - Outputs to be used are 11 to 14
   - Set 2 V rated OMICRON output on LL1,2,3
   - Example In = 100 A, injection is from 0 A to 350 A (accuracy from 35 A to 350 A)
2. From 0 to 7.1 In with accuracy needed from 0.71 In to 7.1 In
   - Connect to input 1
   - Outputs to be used are 5 to 8
   - Set 1 V rated OMICRON output on LL4,5,6
   - Example In = 100 A, injection is from 0 A to 710 A (accuracy from 71 A to 710 A)
3. From 0 to 35 In with accuracy needed from 3.5 In
   - Connect to input 1
   - Outputs to be used are 1 to 4

- Set 2 V rated OMICRON output on LL1,2,3
- Example In = 100 A, injection is from 0 A to 3500 A (accuracy from 350 A to 3500 A)

For a 225 mV rated LPCT

1. From 0 to 0.35 In with accuracy needed from 0.035 In to 0.35 In
   - Connect to input 3
   - Outputs to be used are 11 to 14
   - Set 2 V rated OMICRON output on LL1,2,3
   - Example In = 100 A, injection is from 0 A to 35 A (accuracy from 3.5 A to 35 A)
2. From 0 to 0.71 In with accuracy needed from 0.071 In to 0.71 In
   - Connect to input 1
   - Outputs to be used are 5 to 8
   - Set 1 V rated OMICRON output on LL4,5,6
   - Example In = 100 A, injection is from 0 A to 71 A (accuracy from 7.1 A to 71 A)
3. From 0 to 3.5 In with accuracy needed from 0.35 In to 3.5 In
   - Connect to input 1
   - Outputs to be used are 1 to 4
   - Set 2 V rated OMICRON output on LL1,2,3
   - Example In = 100 A, injection is from 0 A to 350 A (accuracy from 35 A to 350 A)
4. From 0 to 35 In with accuracy needed from 3.5 In to 35 In
   - Connect to input 3
   - Outputs to be used are 15 to 18
   - Set 1 V rated OMICRON output on LL4,5,6
   - Example In = 100 A, injection is from 0 A to 3500 A (accuracy from 350 A to 3500 A)

9.12.4 Voltage injection test

For a 3.25 V (phase to phase) rated LPVT (= 1.88 V (phase to neutral))

1. From 0 to 3.8 Vn with accuracy needed from 0.38 Vn to 3.8 Vn
   a. Method 1:
      – Connect to input 2
      – Outputs to be used are 9 and 10
      – Set 3.25 V rated OMICRON output on LL1,2,3 or LL4,5,6
   b. Method 2:
      – Connect to input 3
      – Output to be used is 19
      – Set 3.25 V rated OMICRON output on LL4,5,6
2. If lower voltage injection is needed:
   a. From 0 to 0.42 Vn with accuracy needed from 0.042 Vn to 0.42 Vn
      – Connect to input 1 to obtain 0.188 V rated output
      – Output to be used is 4
      – Set 1.668 V rated OMICRON output on LL1,2,3
   b. From 0 to 0.042 Vn with accuracy needed from 0.0042 Vn to 0.042 Vn
      – Connect to input 1 to obtain 0.188 V rated output
      – Output to be used is 14
      – Set 1.668 V rated OMICRON output on LL1,2,3

9.12.5 Current and voltage injections test

NOTE: The simultaneous current and voltage injection test is only possible connected to input 3 of the LPIT test box.

Use one of the above solutions described in current injection test and voltage injection test for outputs 11 to 19.

9.12.6 Test input (20th RJ45)

This input allows for an easy multimeter connection to measure either voltages or resistances between different pinouts of an IEC 61869-11 LPVT (or an IEC 61869-10 LPCT) connected to this RJ45 input.

Table 166 - Pin assignment for RJ45 connectors

RJ45 Pin	1	2	3	4	5	6	7	8
LPCT	S1	S2						
LPVT							a	n
LPVT (old)				n	a			

9.12.7 LPCT/LPVT Test Sockets and Plugs ESSAILEC®

Description

The Essailec® LPCT/LPVT test sockets and plugs from TE Connectivity allow the PowerLogic P3 protection relay LPCT/LPVT measuring inputs to be tested using RJ45 cable connections. The test socket is installed on the front panel of medium voltage switchgear, interconnecting the LPCT/LPVTs and PowerLogic P3 protection relay. The solution offers "make before break" principle so the test procedure is exactly the same as for protection relays with conventional measuring inputs.

- RJ45 connection type (Cat.5)
- Allow easy measurement and injection operations
- Signal protection against EMI/RFI thanks to a screened cover on the screened socket
- Shielding tests according to IEC 62271-1 Annex J
- Earthing point: M5 screw to be wired with an adapted ring lug termination. Ø = 4 mm (0.16 in.), torque = 1.2 Nm (10.8 lb.in).

Make before break principle:

- The circuits are automatically disconnected with the insertion of the plug,
- The circuits close automatically when the plug is removed.

Figure 280 - LPCT/LPVT Test Sockets and Plugs ESSAILEC®

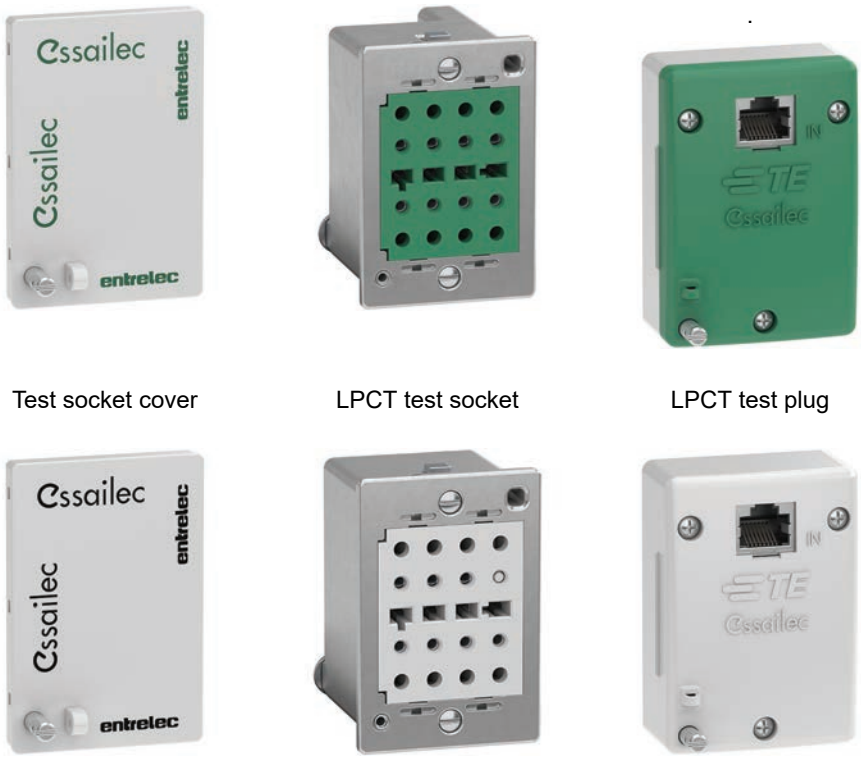

Test socket cover | LPCT test socket | LPCT test plug

Test socket cover | LPVT test socket | LPVT test plug

Main technical data

Connecting capacity	IEC 947-1
Body	Polycarbonate UL94 V0
Conductive parts	Silver-plated
Rated voltage	125 V
Impulse withstand voltage	1000 V
Rated current	1.5 A
Accuracy	0.5 %
Storage temperature range	-40 ... +85 °C
Working temperature range	-40 ... +85 °C
Protection without lid / with lid	IP20 / IP40
Pollution degree	3

Ordering table

Please refer to *Table 168* for ordering information of test sockets/plugs.

9.12.8 Order codes for LPCT/LPVT accessories

The order codes for the LPIT test box and test sockets/plugs are listed in the following two tables.

Table 167 - Order codes of LPIT test box

Order code	Description
REL51037	LPIT test box including: Test box × 1 Test cable for test box × 1 RJ45 2m cable × 8
REL51088	Spare cable for LPIT test box
59660	0.6 m remote module connection cord
59661	2 m remote module connection cord
59662	4 m remote module connection cord

Table 168 - Order codes of test sockets/plugs

Order code	Description
REL51089	LPCT test socket with cover
REL51090	LPCT test plug
REL51091	Spare cover for LPCT test socket
REL51092	LPVT test socket with cover
REL51093	LPVT test plug
REL51094	Spare cover for LPVT test socket

9.13 Voltage measurement modes

Multiple channel voltage measurement – conventional VT

The P3U30 model has nine different voltage measurement modes.

Table 169 - Voltage measurement modes for P3U20 and P3U30

<table>
<tr><th colspan="2" rowspan="2">Terminal</th><th colspan="6">X5</th><th colspan="2">X2</th></tr>
<tr><th>20</th><th>19</th><th>18</th><th>17</th><th>16</th><th>15</th><th>1</th><th>2</th></tr>
<tr><th colspan="2">Voltage channel[105)]</th><th colspan="2">U_1</th><th colspan="2">U_2</th><th colspan="2">U_3</th><th colspan="2">U_4</th></tr>
<tr><td colspan="2"></td><td colspan="8">Mode / Used voltage</td></tr>
<tr><td rowspan="9">P3U30</td><td>3LN</td><td colspan="2" rowspan="4">U_{L1}</td><td colspan="2" rowspan="4">U_{L2}</td><td colspan="2" rowspan="2">U_{L3}</td><td colspan="2">-</td></tr>
<tr><td>3LN+U_0</td><td colspan="2">U_0</td></tr>
<tr><td>3LN+LLy</td><td colspan="2">LLy</td><td colspan="2" rowspan="2">U_{L3}</td></tr>
<tr><td>3LN+LNy</td><td colspan="2">LNy</td></tr>
<tr><td>2LL+U_0</td><td colspan="2" rowspan="4">U_{12}</td><td colspan="2" rowspan="3">U_{23}</td><td colspan="2">U_0</td><td colspan="2">-</td></tr>
<tr><td>2LL +U_0+LLy</td><td colspan="2">LLy</td><td colspan="2" rowspan="6">U_0</td></tr>
<tr><td>2LL +U_0+LNy</td><td colspan="2">LNy</td></tr>
<tr><td>LL +U_0+LLy +LLz</td><td colspan="2">U_{12y}</td><td colspan="2">U_{12z}</td></tr>
<tr><td>LN +U_0+LNy +LNz</td><td colspan="2">U_{L1}</td><td colspan="2">U_{L1y}</td><td colspan="2">U_{L1z}</td></tr>
</table>

Terminal		**X5**						**X2**	
		20	**19**	**18**	**17**	**16**	**15**	**1**	**2**
Voltage channel[105)]		**U_1**		**U_2**		**U_3**		**U_4**	
P3U20	U_0							U_0	
	U_{LN}							U_{L1}	
	U_{LL}							U_{L1-2}	

[105)] U_1, U_2, U_3 and U_4 prefer relay voltage input connectors only.

Figure 281 - 3LN

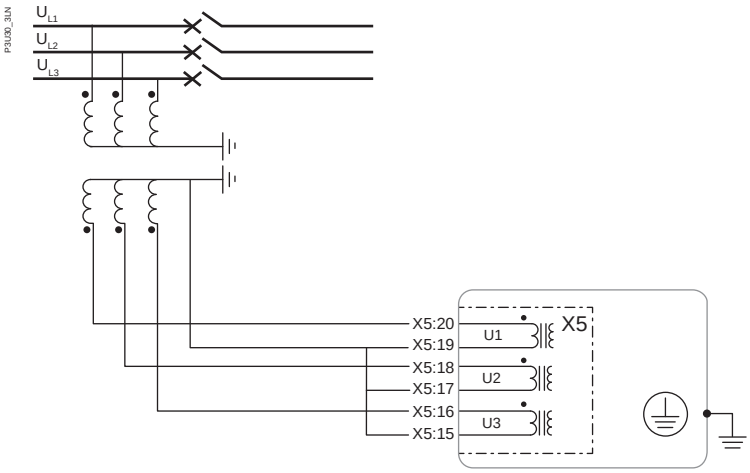

3LN

- Voltages measured by VTs: U_{L1}, U_{L2}, U_{L3}
- Values calculated: U_{L12}, U_{L23}, U_{L31}, U_0, U_1, U_2, U_2/U_1, f
- Measurements available: All
- Protection functions not available: ANSI 67NI, ANSI 25

⚠⚠ DANGER

HAZARD OF ELECTRIC SHOCK, EXPLOSION, OR ARC FLASH

- Always connect the polarity of the current transformer (CT) and / or the voltage transformer (VT) and their secondary ground wiring according to the connection diagrams presented in this document.
- Connect the device's protective ground to functional earth according to the connection diagrams presented in this document.

Failure to follow this instruction will result in death or serious injury.

Figure 282 - 3LN+U_0

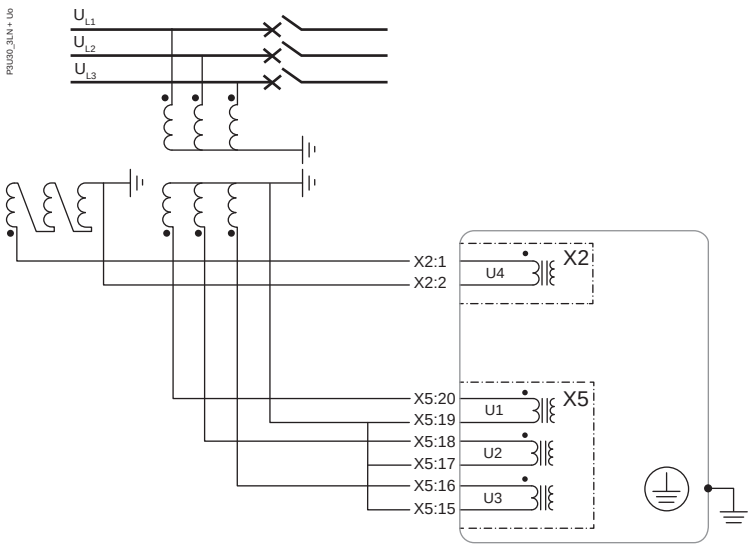

3LN+U_0

This connection is typically used for feeder and motor protection schemes.

- Voltages measured by VTs: U_{L1}, U_{L2}, U_{L3}, U_0
- Values calculated: U_{L12}, U_{L23}, U_{L31}, U_1, U_2, U_2/U_1, f
- Measurements available: All
- Protection functions not available: ANSI 25

⚠⚠ DANGER

HAZARD OF ELECTRIC SHOCK, EXPLOSION, OR ARC FLASH

- Always connect the polarity of the current transformer (CT) and the voltage transformer (VT) and their secondary ground wiring according to the connection diagrams presented in this document.
- Connect the device's protective ground to functional earth according to the connection diagrams presented in this document.

Failure to follow this instruction will result in death or serious injury.

Figure 283 - 3LN+LLy

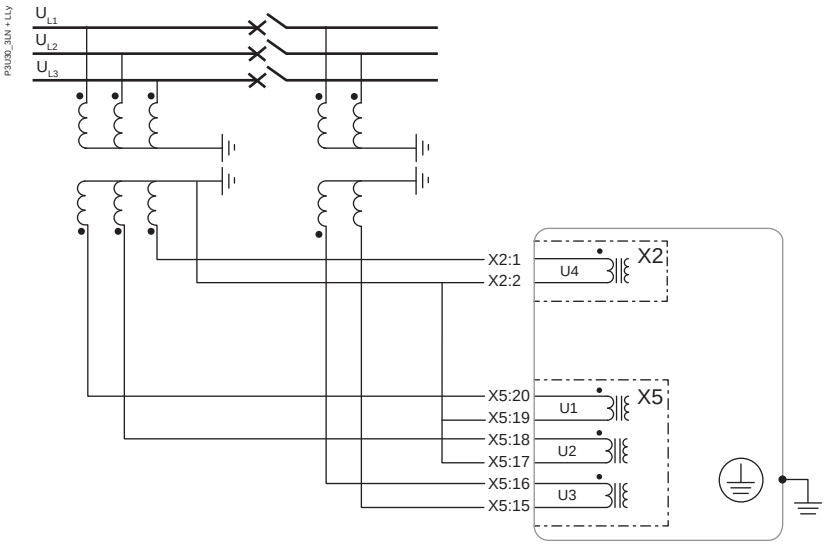

3LN+LLy

- Voltages measured by VTs: U_{L1}, U_{L2}, U_{L3}, U_{L12y}
- Values calculated: U_{L12}, U_{L23}, U_{L31}, U_0, U_1, U_2, U_2/U_1, f
- Measurements available: All
- Protection functions not available: ANSI 67NI

Connection of voltage transformers for synchrocheck application. The other side of the CB has line-to-line connection for reference voltage.

⚠⚠ DANGER

HAZARD OF ELECTRIC SHOCK, EXPLOSION, OR ARC FLASH

- Always connect the polarity of the current transformer (CT) and / or the voltage transformer (VT) and their secondary ground wiring according to the connection diagrams presented in this document.
- Connect the device's protective ground to functional earth according to the connection diagrams presented in this document.

Failure to follow this instruction will result in death or serious injury.

Figure 284 - 3LN+LNy

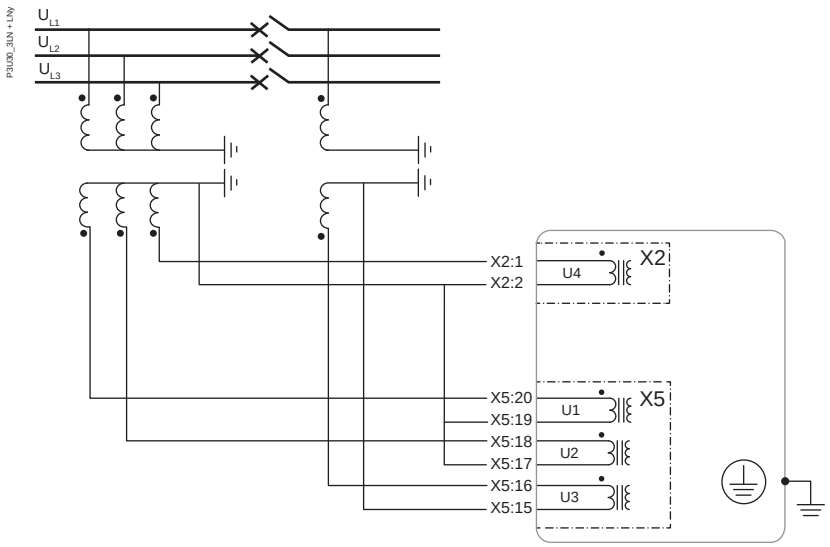

3LN+LNy

This connection is typically used for feeder protection scheme where line-to-neutral voltage is required for synchrocheck application.

- Voltages measured by VTs: U_{L1}, U_{L2}, U_{L3}, U_{L1y}
- Values calculated: U_{L12}, U_{L23}, U_{L31}, U_0, U_1, U_2, U_2/U_1, f
- Measurements available: All
- Protection functions not available: ANSI 67NI

⚠⚠ DANGER

HAZARD OF ELECTRIC SHOCK, EXPLOSION, OR ARC FLASH

- Always connect the polarity of the current transformer (CT) and / or the voltage transformer (VT) and their secondary ground wiring according to the connection diagrams presented in this document.
- Connect the device's protective ground to functional earth according to the connection diagrams presented in this document.

Failure to follow this instruction will result in death or serious injury.

Figure 285 - 2LL+U_0

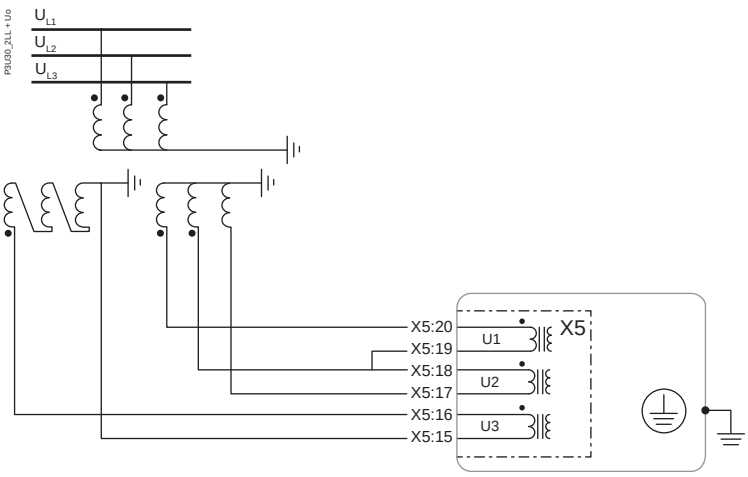

2LL+U_0

- Voltages measured by VTs: U_{L12}, U_{L23}, U_0
- Values calculated: U_{L1}, U_{L2}, U_{L3}, U_{31}, U_1, U_2, f
- Measurements available: All
- Protection functions not available: ANSI 25

⚠⚠ DANGER

HAZARD OF ELECTRIC SHOCK, EXPLOSION, OR ARC FLASH

- Always connect the polarity of the current transformer (CT) and / or the voltage transformer (VT) and their secondary ground wiring according to the connection diagrams presented in this document.
- Connect the device's protective ground to functional earth according to the connection diagrams presented in this document.

Failure to follow this instruction will result in death or serious injury.

Figure 286 - 2LL+U_0+LLy

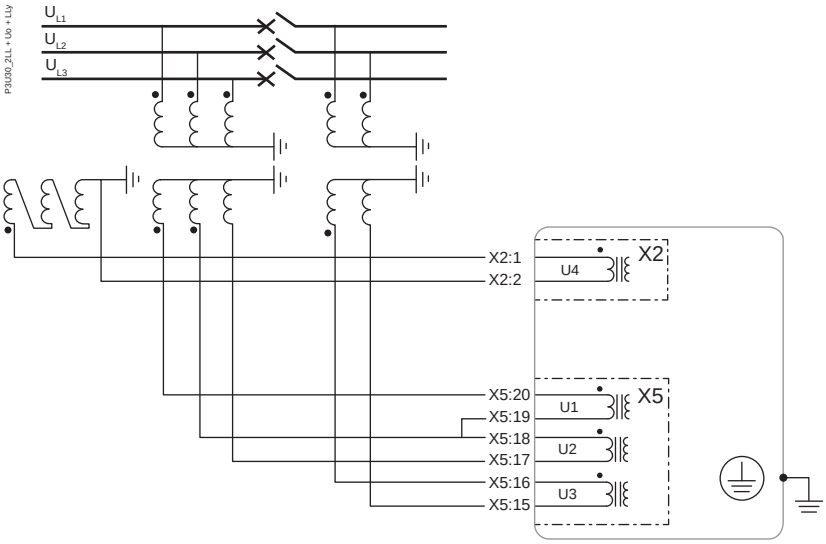

2LL+U_0+LLy

Connection of two line-to-line and neutral displacement voltage scheme. Line-to-line reference voltage is taken from other side of the CB for synchrocheck scheme.

- Voltages measured by VTs: U_{L12}, U_{L23}, U_0, U_{L12y}
- Values calculated: U_{L31}, U_{L1}, U_{L2}, U_{L3}, U_1, U_2, f, fy
- Measurements available: All
- Protection functions not available: -

⚠⚠ DANGER

HAZARD OF ELECTRIC SHOCK, EXPLOSION, OR ARC FLASH

- Always connect the polarity of the current transformer (CT) and / or the voltage transformer (VT) and their secondary ground wiring according to the connection diagrams presented in this document.
- Connect the device's protective ground to functional earth according to the connection diagrams presented in this document.

Failure to follow this instruction will result in death or serious injury.

Figure 287 - 2LL+U_0+LNy

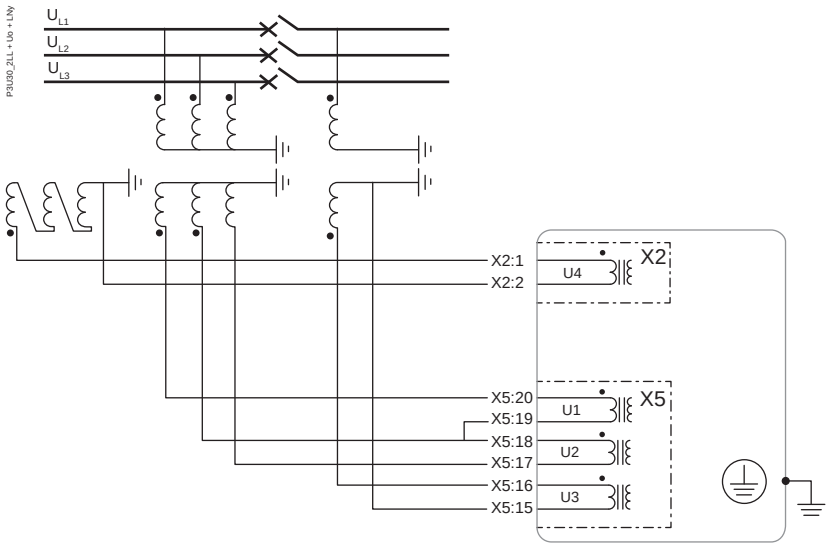

2LL+U_0+LNy

Connection of two line-to-line and neutral displacement voltage scheme. The other side of the CB has phase-to-neutral connection for synchrocheck.

- Voltages measured by VTs: U_{L12}, U_{L23}, U_0, U_{L1y}
- Values calculated: U_{L31}, U_{L1}, U_{L2}, U_{L3}, U_1, U_2, f, fy
- Measurements available: All
- Protection functions not available: -

DANGER

HAZARD OF ELECTRIC SHOCK, EXPLOSION, OR ARC FLASH

- Always connect the polarity of the current transformer (CT) and / or the voltage transformer (VT) and their secondary ground wiring according to the connection diagrams presented in this document.
- Connect the device's protective ground to functional earth according to the connection diagrams presented in this document.

Failure to follow this instruction will result in death or serious injury.

Figure 288 - LL+U_0+LLy+LLz

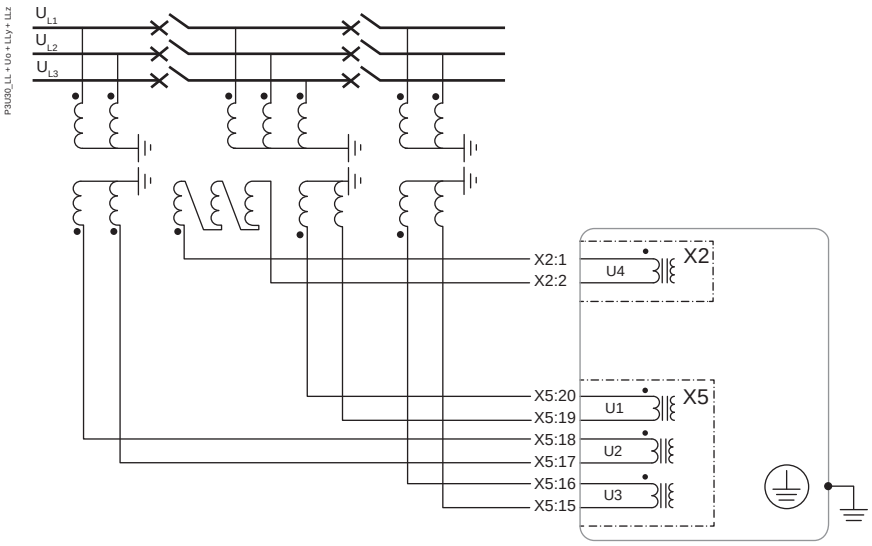

LL+U_0+LLy+LLz

This scheme has two CBs to be synchronized. The left side of the bus bar has line-to-line and right side line-to-line connection for synchrocheck's reference voltages. In the middle system, voltages are measured by phase-to-neutral and broken delta connection.

- Voltages measured by VTs: U_{L12}, U_0, U_{L12y}, U_{L12z}
- Values calculated: U_{L1}, U_{L2}, U_{L3}, $U_{23}U_{31}$, f, fy, fz
- Measurements available: -
- Protection functions not available: ANSI 21FL, ANSI 67

DANGER

HAZARD OF ELECTRIC SHOCK, EXPLOSION, OR ARC FLASH

- Always connect the polarity of the current transformer (CT) and / or the voltage transformer (VT) and their secondary ground wiring according to the connection diagrams presented in this document.
- Connect the device's protective ground to functional earth according to the connection diagrams presented in this document.

Failure to follow this instruction will result in death or serious injury.

Figure 289 - LN+U_0+LNy+LNz

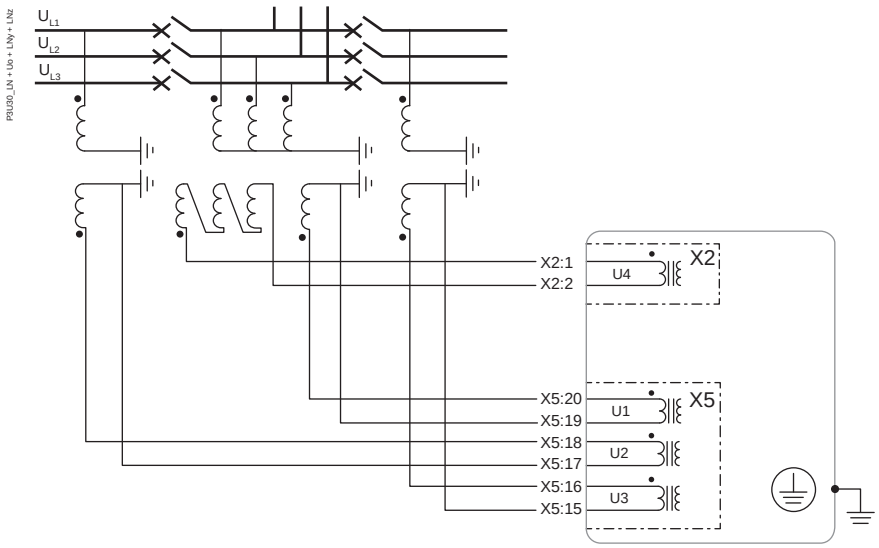

LN+U_0+LNy+LNz

This scheme has two CBs to be synchronized. The left and right sides of the bus bar have line-to-neutral connections for synchrocheck's reference voltages. In the middle system, voltages are measured by phase-to-neutral and broken delta connection.

- Voltages measured by VTs: U_{L1}, U_0, U_{L1y}, U_{L1z}
- Values calculated: U_{12}, U_{23}, U_{31}, U_{L2}, U_{L3}, f, fy, fz
- Measurements available: -
- Protection functions not available: ANSI 21FL, ANSI 67

⚠⚠ DANGER

HAZARD OF ELECTRIC SHOCK, EXPLOSION, OR ARC FLASH

- Always connect the polarity of the current transformer (CT) and / or the voltage transformer (VT) and their secondary ground wiring according to the connection diagrams presented in this document.
- Connect the device's protective ground to functional earth according to the connection diagrams presented in this document.

Failure to follow this instruction will result in death or serious injury.

9.13.1 Multiple channel voltage measurement – LPVT

Multiple channel voltage measurement – LPVT

The P3U30 model has four different voltage measurement modes.

NOTE: The LL modes are not valid for LPVT applications.

Table 170 - Voltage measurement modes for P3U30 using LPVT or VT with voltage adapter

Terminal		**Hub 1**			**Hub 2**
Voltage channel		**U_1**	**U_2**	**U_3**	**U_4**
		Mode / Used voltage			
P3U30	3LN	U_{L1}	U_{L2}	U_{L3}	-
	3LN+U_0				U_0
	3LN+LNy			LNy	U_{L3}
	LN +U_0+LNy +LNz	U_{L1}	U_{L1y}	U_{L1z}	

3LN

- Voltages measured by LPVTs:U_{L1}, U_{L2}, U_{L3}
- Values calculated:U_{L12}, U_{L23}, U_{L31}, U_1, U_2, U_2/U_1, f, U_0
- Measurements available: All
- Protection functions not available: ANSI 25

Figure 290 - 3LN

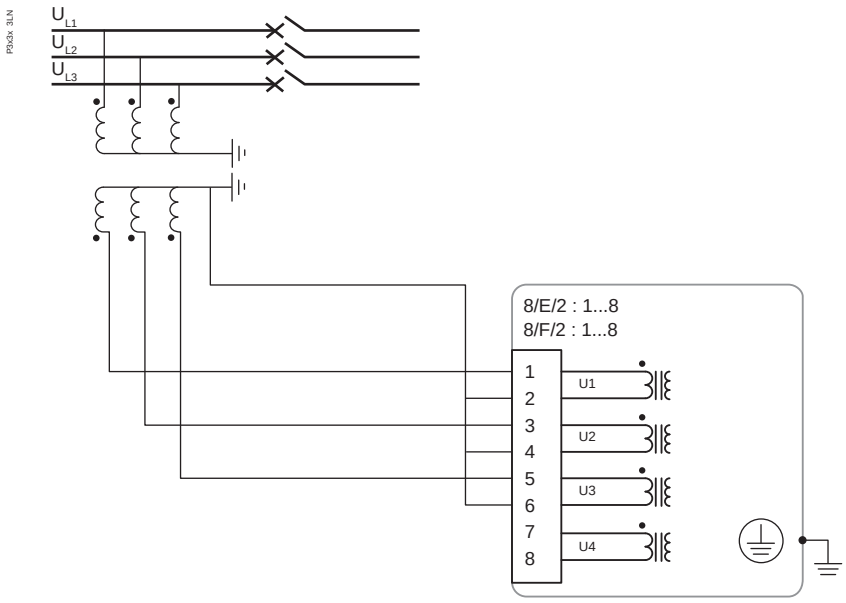

⚠⚠ DANGER

HAZARD OF ELECTRIC SHOCK, EXPLOSION, OR ARC FLASH

- Always connect the polarity of the current transformer (CT) and the voltage transformer (VT) and their secondary ground wiring according to the connection diagrams presented in this document.
- Connect the device's protective ground to functional earth according to the connection diagrams presented in this document.

Failure to follow this instruction will result in death or serious injury.

3LN+U_0

This connection is typically used for feeder and motor protection schemes.

- Voltages measured by VTs: U_{L1}, U_{L2}, U_{L3}, U_0
- Values calculated: U_{L12}, U_{L23}, U_{L31}, U_1, U_2, U_2/U_1, f
- Measurements available: All
- Protection functions not available: ANSI 25

3LN+LNy

This connection is typically used for feeder protection scheme where line-to-neutral voltage is required for synchrocheck application.

- Voltages measured by VTs: U_{L1}, U_{L2}, U_{L3}, U_{L1y}
- Values calculated: U_{L12}, U_{L23}, U_{L31}, U_0, U_1, U_2, U_2/U_1, f
- Measurements available: All
- Protection functions not available: –

LN+U_0+LNy+LNz

This scheme has two CBs to be synchronized. The left and right sides of the bus bar have line-to-neutral connections for synchrocheck's reference voltages. In the

middle, system voltages are measured by phase-to-neutral and broken delta connection.

- Voltages measured by LPVTs: U_L, U_0, U_{Ly}, U_{Lz}
- Values calculated: U_{L12}, U_{L23}, U_{L31}f
- Measurements available: -
- Protection functions not available:

Figure 291 - LN+U_0+LNy+LNz

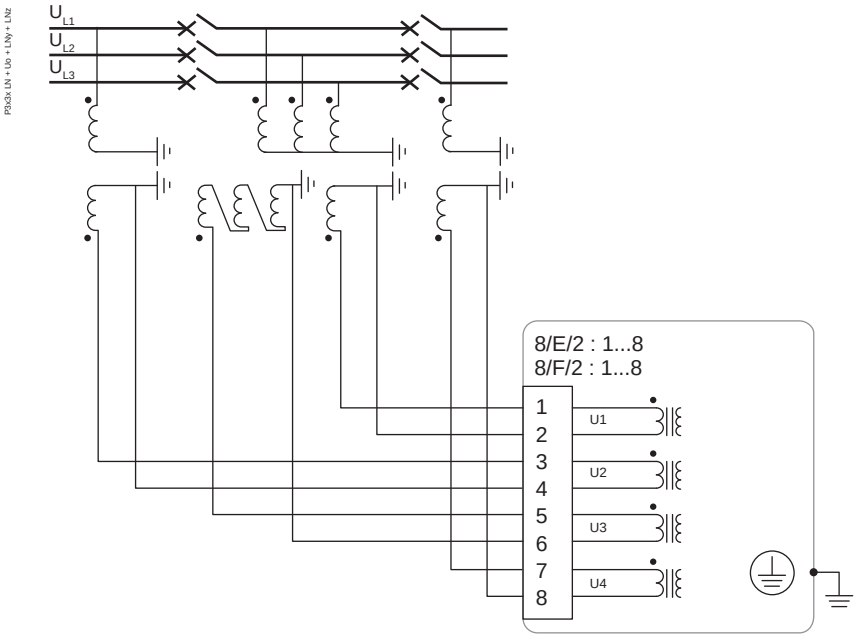

DANGER

HAZARD OF ELECTRIC SHOCK, EXPLOSION, OR ARC FLASH

- Always connect the polarity of the current transformer (CT) and the voltage transformer (VT) and their secondary ground wiring according to the connection diagrams presented in this document.
- Connect the device's protective ground to functional earth according to the connection diagrams presented in this document.

Failure to follow this instruction will result in death or serious injury.

9.14 CSH120 and CSH200 Core balance CTs

Function

The specifically designed CSH120 and CSH200 core balance CTs are for direct earth fault overcurrent measurement. The difference between CSH120 and CSH200 is the inner diameter.

Because of their low-voltage insulation, they can only be used on cables.

Figure 292 - CSH120 and CSH200 core balance CTs

Characteristics

	CSH120	CSH200
Inner diameter	120 mm (4.7 in)	200 mm (7.9 in)
Weight	0.6 kg (1.32 lb)	1.4 kg (3.09 lb)
Accuracy	±5% at 20°C (68°F)	
	±6% max. from -25°C to 70°C (-13°F to +158°F)	
Transformation ratio	470/1	
Maximum permissible current	20 kA - 1 s	
Operating temperature	-25°C to +70°C (-13°F to +158°F)	
Storage temperature	-40°C to +85°C (-40°F to +185°F)	

Dimensions

Figure 293 - Dimensions

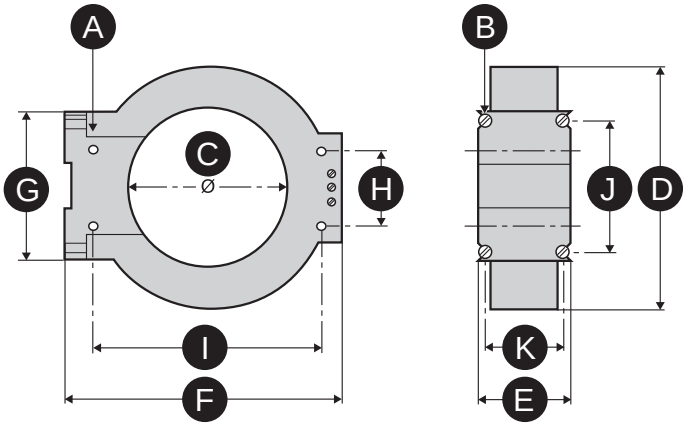

A. 4 horizontal mounting holes Ø 6 **B.** 4 vertical mounting holes Ø 6

Dimensions	C.	D.	E.	F.	G.	H.	I.	J.	K.
CSH120 (in)	120 (4.75)	164 (6.46)	44 (1.73)	190 (7.48)	80 (3.14)	40 (1.57)	166 (6.54)	65 (2.56)	35 (1.38)
CSH200 (in)	196 (7.72)	256 (10.1)	46 (1.81)	274 (10.8)	120 (4.72)	60 (2.36)	254 (10)	104 (4.09)	37 (1.46)

DANGER

HAZARD OF ELECTRIC SHOCK, EXPLOSION, OR ARC FLASH

- Only qualified personnel should install this equipment. Such work should be performed only after reading this entire set of instructions and checking the technical characteristics of the device.
- NEVER work alone.
- Turn off all power supplying this equipment before working on or inside it. Consider all sources of power, including the possibility of backfeeding.
- Always use a properly rated voltage sensing device to confirm that all power is off.
- Only CSH120 and CSH200 core balance CTs can be used for direct earth fault overcurrent measurement.
- Install the core balance CTs on insulated cables.
- Cables with a rated voltage of more than 1000 V must also have an earthed shielding.

Failure to follow these instructions will result in death or serious injury.

Assembly

Group the MV cable (or cables) in the middle of the core balance CT.

Use non-conductive binding to hold the cables.

Remember to insert the three medium-voltage cable shielding earthing cables through the core balance CT.

Figure 294 - Assembly on MV cables

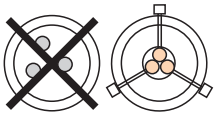

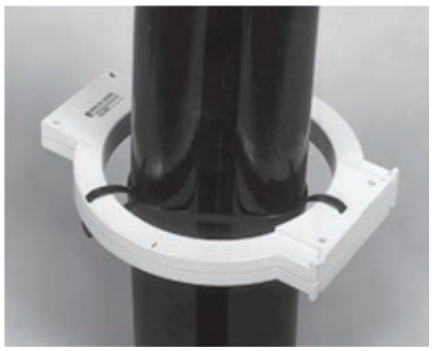

⚠ CAUTION

UNINTENDED EQUIPMENT OPERATION

Connect the secondary circuit and the cable shielding of the CSH core balance CTs to earth in the shortest possible manner according to the connection diagram presented in this document.

Failure to follow these instructions can result in equipment damage.

Connection

Connection to PowerLogic P3U20 and P3U30

To earth fault current I_0 input, on connector X1, terminals 9 and 10 (shielding).

Recommended cable

- Sheathed cable, shielded by tinned copper braid
- Minimum cable cross-section 0.93 mm² (AWG 18)
- Resistance per unit length < 100 mΩ/m (30.5 mΩ/ft)
- Minimum dielectric strength: 1000 V (700 Vrms)
- Connect the cable shielding in the shortest manner possible to PowerLogic P3U20 and P3U30
- Flatten the connection cable against the metal frames of the cubicle.

The connection cable shielding is grounded in PowerLogic P3U20 and P3U30.

The maximum resistance of the PowerLogic P3U20 and P3U30 connection wiring must not exceed 4 Ω (i.e. 20 m maximum for 100 mΩ/m or 66 ft maximum for 30.5 mΩ/ft).

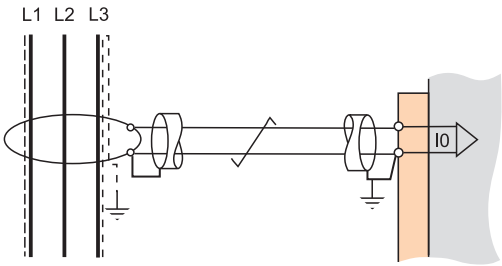

Connecting two CSH120 or CSH200 CTs in parallel

Two CSH200 CTs can be connected in parallel if the cables do not fit through a single CT.

- Fit one CT per a set of cables.
- Ensure the wiring polarity is correct. The maximum permissible current at the primary is limited to 6 kA - 1 s for all cables.

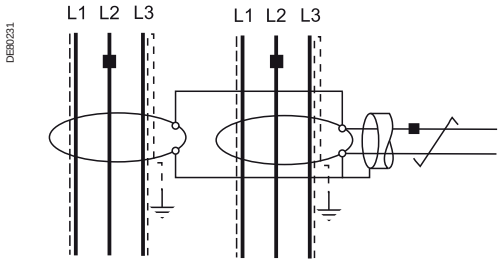

10 Test and environmental conditions

10.1 Disturbance tests

Table 171 - Disturbance tests

Test	Standard & Test class / level	Test value
Emission	**IEC/EN 60255-26 (ed3)**	
Conducted	Class A / CISPR 22	0.15–30 MHz
Emitted	Class A / CISPR 11	30–1000 MHz
Immunity	**IEC/EN 60255-26 (ed3)**	
Slow damped oscillatory wave 1 MHz	IEC/EN 61000-4-18 IEEE C37.90.1	±2.5kVp CM ±2.5kVp DM
Fast damped oscillatory wave 3 MHz, 10 MHz and 30 MHz	IEC/EN 61000-4-18	±2.5kVp CM
Static discharge (ESD)	IEC/EN 61000-4-2 Level 4	±8 kV contact ±15 kV air
Emitted HF field	IEC/EN 61000-4-3 Level 3 IEEE C37.90.2	80–2700 MHz 80–1000 MHz, 20 V/m
Fast transients (EFT)[106)]	IEC/EN 61000-4-4 Level 4 IEEE C37.90.1	±4 kV, 5/50 ns, 5 kHz
Surge	IEC/EN 61000-4-5 Level 3	±2 kV, 1.2/50 µs, CM ±1 kV, 1.2/50 µs, DM
Conducted HF field	IEC/EN 61000-4-6 Level 3	0.15–80 MHz, 10 Vrms
Power-frequency magnetic field	IEC/EN 61000-4-8	300 A/m (continuous) 1000 A/m 1–3 s
Pulse magnetic field	IEC/EN 61000-4-9 Level 5	1000 A/m, 1.2/50 µs

Test	Standard & Test class / level	Test value
ac and dc voltage dips	IEC/EN 61000-4-29, IEC/EN 61000-4-11	0% of rated voltage - Criteria A • ac: ≥ 0.5 cycle • dc: ≥ 10 ms
		40% of rated voltage - Criteria C • ac: 10 cycles • dc: 200 ms
		70% of rated voltage - Criteria C • ac: 25 cycles • dc: 500 ms
ac and dc voltage interruptions	IEC/EN 61000-4-29, IEC/EN 61000-4-11	100% interruption - Criteria C • ac: 250 cycles • dc: 5 s
Voltage alternative component	IEC/EN 61000-4-17	15% of operating voltage (dc) / 10 min

[106)] When digital inputs are used, it is recommended to add a 20 ms delay setting at the digital inputs.

10.2 Electrical safety tests

Table 172 - Electrical safety tests

Test	Standard & Test class / level	Test value
Impulse voltage withstand	IEC/EN 60255-27, Class III	5 kV, 1.2/50 µs, 0.5 J 1 kV, 1.2/50 µs, 0.5 J Communication
Dielectric test	IEC/EN 60255-27, Class III	2 kV, 50 Hz 0.5 kV, 50 Hz Communication
Insulation resistance	IEC/EN 60255-27	> 100 MΩ at 500 Vdc using only electronic/brushless insulation tester
Protective bonding resistance	IEC/EN 60255-27	shall not exceed 0,1 Ω
Clearance and creepage distance	Design criteria for distances as per IEC 60255-27 Annex C (pollution degree 2, overvoltage category 3)	

Test	Standard & Test class / level	Test value
Burden	IEC 60255-1	
Contact performance	IEC 60255-1	

10.3 Mechanical tests

Table 173 - Mechanical tests

Test	Standard & Test class / level	Test value
Device in operation		
Vibrations	IEC 60255-21-1, Class II / IEC 60068-2-6, Fc	1 Gn, 10 Hz – 150 Hz
Shocks	IEC 60255-21-2, Class II / IEC 60068-2-27, Ea	10 Gn / 11 ms
Seismic	IEC 60255-21-3 Method A, Class II	2 G horizontal / 1 G vertical , 1–35 Hz
Device de-energized		
Vibrations	IEC 60255-21-1, Class II / IEC 60068-2-6, Fc	2 Gn, 10 Hz – 150 Hz
Shocks	IEC 60255-21-2, Class II / IEC 60068-2-27, Ea	30 Gn / 11 ms
Bump	IEC 60255-21-2, Class II / IEC 60068-2-27, Ea	20 Gn / 16 ms

10.4 Environmental tests

Table 174 - Environmental tests

Test	Standard & Test class / level	Test value
Device in operation		
Dry heat	EN / IEC 60068-2-2, Bd	70°C (158°F)
UL 508[107)]	55°C (131°F)	-40°C (-40°F)
Cold	EN / IEC 60068-2-1, Ad	
Damp heat, cyclic	EN / IEC 60068-2-30, Db	From 25°C (77°F) to 55°C (131°F) From 93% RH to 98% RH Testing duration: 6 days

Test	Standard & Test class / level	Test value
Damp heat, static	EN / IEC 60068-2-78, Cab	40°C (104°F) 93% RH Testing duration: 10 days
Change of temperature	IEC / EN 60068-2-14, Nb	Lower temp -40°C Upper temp 70°C 5 cycles
Flowing mixed gas corrosion test, method 1	IEC 60068-2-60, Ke	25° C (77° F), 75 % RH 21 days 100 ppb H2S, 500 ppb SO2
Flowing mixed gas corrosion test, method 4	IEC 60068-2-60, Ke	25° C (77° F), 75 % RH 21 days 10 ppb H2S, 200 ppb NO2, 10 ppb CL2, 200 ppb SO2
Device in storage		
Dry heat	EN / IEC 60068-2-2, Bb	70°C (158°F)
Cold	EN / IEC 60068-2-1, Ab	-40°C (-40°F)

[107)] Test condition: Device operated continuously. All digital inputs and digital outputs activated with 5 s on, 30 s off duty cycle, carrying maximum rated loads.

10.5 Environmental conditions

Table 175 - Environmental conditions

Condition	Value
Ambient temperature, in-service[108)109)]	-40 – 60°C (-40 –140°F)
Ambient temperature, storage	-40 – 70°C (-40 –158°F)
Relative air humidity	< 95%, no condensation allowed
Maximum operating altitude	2000 m (6561.68 ft)

[108)] The display contrast is affected by ambient temperatures below -25°C (-13°F).
[109)] After a cold start, in temperatures below -30°C (-22°F), allow the relay to stabilize for a few minutes to achieve the specified accuracy.

10.6 Casing

Table 176 - Casing

Parameter	Value
Degree of protection (IEC 60529)	IP54 Front panel, IP20 rear side
P3Uxx-5 Dimensions (W x H x D) P3Uxx-6 Dimensions (W x H x D)	171 x 176 x 214 mm / 6.73 x 6.93 x 8.43 in 171 x 176 x 226 mm / 6.73 x 6.93 x 8.90 in
Weight	2.5 kg (5.519 lb)

11 Maintenance

⚠⚠ DANGER

HAZARD OF ELECTRIC SHOCK, EXPLOSION, OR ARC FLASH

- Wear your personal protective equipment (PPE) and comply with the safe electrical work practices. For clothing, see applicable local standards.
- Only qualified personnel should install this equipment. Such work should be performed only after reading this entire set of instructions and checking the technical characteristics of the device.
- NEVER work alone.
- Turn off all power supplying this equipment before working on or inside it. Consider all sources of power, including the possibility of backfeeding.
- Always use a properly rated voltage sensing device to ensure that all power is off.
- Do not open the secondary circuit of a live current transformer.
- Always connect the polarity of the current transformer (CT) and the voltage transformer (VT) and their secondary ground wiring according to the connection diagrams presented in this document.
- Connect the device's protective ground to functional earth according to the connection diagrams presented in this document.

Failure to follow this instruction will result in death or serious injury.

The PowerLogic P3 protection relays and arc flash detection products together with their extension units, communication accessories, arc flash detection sensors and cabling, later called “device”, require maintenance in work according to their specification. Keep a record of the maintenance actions. The maintenance can include, but is not limited to:

- preventive maintenance
- periodic testing
- hardware cleaning
- system status messages
- spare parts
- self-supervision

11.1 Preventive maintenance

Check the device visually when the switch gear is de-energized. During the inspection, pay attention to:

- dirty components
- loose wire connections
- damaged wiring
- indicator lights
- other mechanical connections

Perform visual inspection every three (3) years minimum.

Related topics

2.5.6 Testing the LEDs and LCD screen

11.2 Periodic testing

Test the device periodically according to the end user's safety instructions and national safety instructions or law. Carry out functional testing every five (5) years minimum.

Conduct the testing with a secondary injection principle for the protection stages used in the device and its extension units.

In corrosive or offshore environments, carry out functional testing every three (3) years. For the testing procedures, see separate testing manuals.

11.3 Hardware cleaning

Special attention must be paid that the device do not become dirty. If cleaning is required, wipe out dirt from the units.

11.4 System status messages

If the device's self checking detects an unindented system status, it will in most cases provide an alarm by activating the service LED and indication status notification on the LCD screen. If this happens, store the possible message and contact your local representative for further guidance.

11.5 Spare parts

Use an entire unit as a spare part for the device to be replaced. Always store spare parts in storage areas that meet the requirements stated in the user documentation.

11.6 Self-supervision

NOTICE

LOSS OF PROTECTION OR RISK OF NUISANCE TRIPPING

Check that the operating mode and SF relay wiring are compatible with the installation.

Failure to follow these instructions can result in equipment damage.

NOTE: If the relay is no longer supplied with power or is in permanent fault state, the protection functions are no longer active and all the PowerLogic P3 digital outputs are dropped out.

Description

The electronic parts and the associated circuitry as well as the program execution are supervised by means of a separate watchdog circuit. Besides supervising the device, the watchdog circuit attempts to restart the microcontroller in an

inoperable situation. If the microcontroller does not restart, the watchdog issues a self-supervision signal indicating a permanent internal condition.

When the watchdog circuit detects a permanent fault, it always blocks any control of other digital outputs (except for the self-supervision digital output). In addition, the internal supply voltages are supervised. Should the auxiliary supply of the device disappear, an indication is automatically given because the device status inoperative (SF) digital output functions on a working current principle. This means that the SF relay is energized, the X3:18–20 contact closed, when the auxiliary supply is on. When a permanent fault occurs, contact 18-20 opens, and contact 18-19 closes. The service LED and SF contact are assigned to work together. The manufacturer recommends that the SF output is hardwired into the substation's automation system for alarm purposes.

In addition to the dedicated self-supervision function, the protection relay has several alarm signals that can be connected to outputs through the output matrix. The alarms include:

- remote communication inactive
- extension I/O communication inactive
- communication Port 1 down
- communication Port 2 down
- selfdiag 1, 2 or 3 alarm
- password open

NOTE: SF output is referenced as "service status output" in the setting tool.

11.6.1 Diagnostics

The device runs self-diagnostic tests for hardware and software in boot sequence and also performs runtime checking.

Permanent inoperative state

The local panel also displays a detected fault message. The permanent inoperative state is entered when the device is not able to handle main functions.

Temporal inoperative state

When the self-diagnostic function detects a temporal inoperative state, a Selfdiag matrix signal is set and an event (E56) is generated. If the inoperative state was only temporary, an off event is generated (E57).

Diagnostic registers

Self-diagnostic data can be assigned to 3 groups (Selfdiag 1, 2 and 3) in **SELFDIAG SIGNAL CONFIGURATION**. The information of each self-diagnostic group can be found in four 16-bit diagnostic registers, they are readable through remote protocols. The addresses of the registers are:

- 2191 to 2194 for Selfdiag 1
- 4563 to 4566 for Selfdiag 2
- 4567 to 4570 for Selfdiag 3

The following table shows the meaning of each diagnostic register and their bits.

Table 177 - Readable registers through remote communication protocols

Register	Bit	Code	Description
SelfDiag1	0 (LSB)	(Reserved)	(Reserved)
	1	(Reserved)	(Reserved)
	2	T1	Detected digital output fault
	3	T2	
	4	T3	
	5	T4	
	6	T5	
	7	T6	
	8	T7	
	10	A1	
SelfDiag4	0 (LSB)	+12V	Detected internal voltage fault
	1	ComBuff	BUS: detected buffer error
	2	Order Code	Detected order code error
	3	Slot card	Detected option card error

The code is displayed in self-diagnostic events and on the diagnostic menu on the local panel and eSetup Easergy Pro.

12 Order codes and accessories

12.1 Order codes

When ordering, state:

- Order code of the relay
- Quantity
- Accessories (see the order codes in section Accessories)

Figure 295 - P3U20 order code

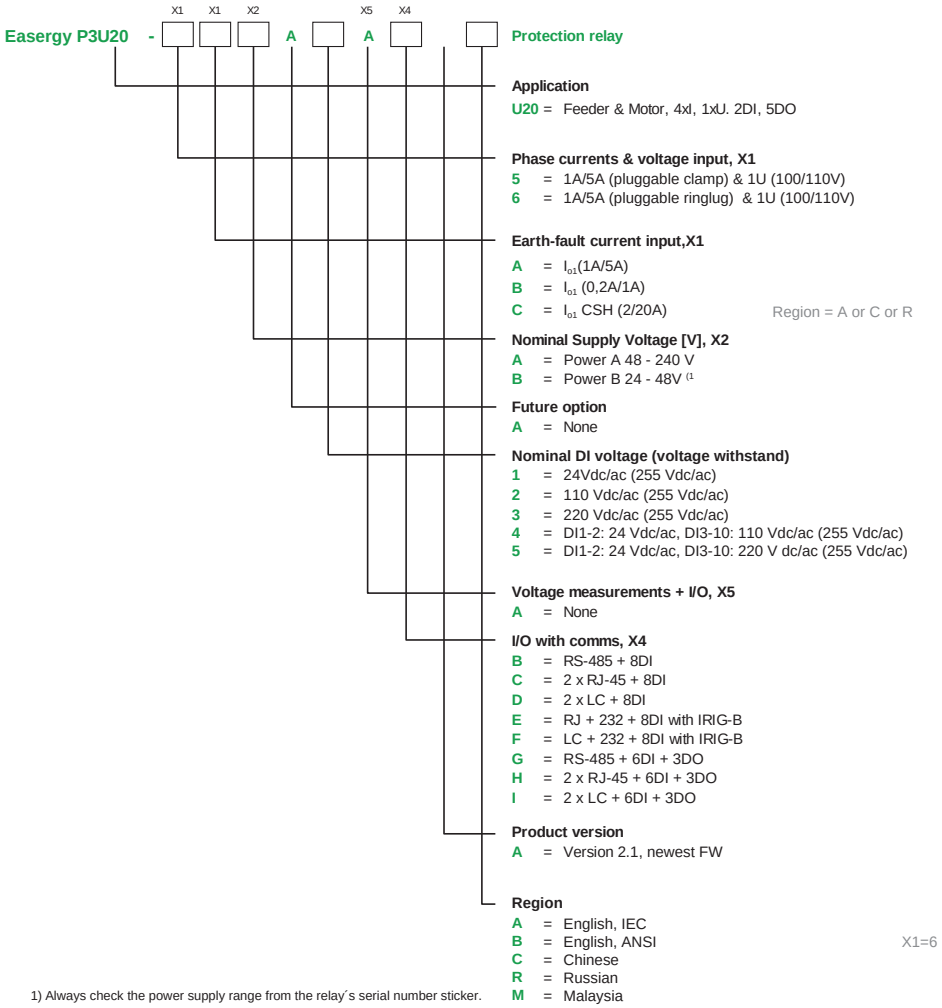

1) Always check the power supply range from the device's serial number label.

NOTE: All PCBA cards are conformally coated.

Figure 296 - P3U30 order code

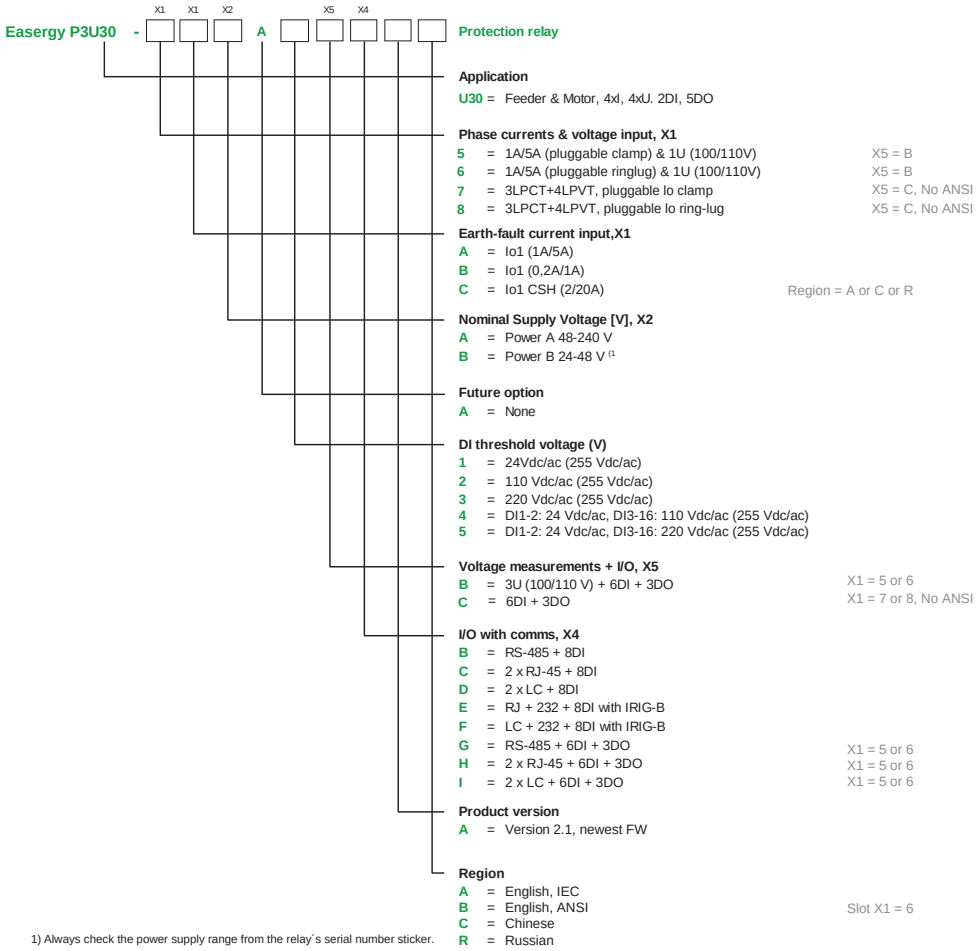

1) Always check the power supply range from the device's serial number label.

NOTE: All PCBA cards are conformally coated.

12.2 Accessories

Table 178 - Accessories for PowerLogic P3 Standard

Product reference	Description	REL code	P3U20	P3U30
VIO12AASE	RTD module, 12pcs RTD inputs, Optical Tx	REL52811	X	X
VIO12ABSE	RTD module, 12pcs RTD inputs, RS485	REL52812	X	X
VIO12ACSE	RTD module, 12pcs RTD inputs, mA in/out	REL52813	X	X
VIO12ADSE	RTD module, 12pcs RTD inputs, mA in/out	REL52814	Y	X
VPA3CGSE	Profibus interface module	REL52815	X	X
VSE001-GGSE	Fiber optic module (Glass - Glass)	REL52816	X	X
VSE001-GPSE	Fiber optic module (Glass - Plastic)	REL52817	X	X

Product reference	Description	REL code	P3U20	P3U30
VSE001-PGSE	Fiber optic module (Plastic - Glass)	REL52818	X	X
VSE001-PPSE	Fiber optic module (Plastic - Plastic)	REL52819	X	X
VSE002	RS485 module	REL52820	X	X
VX052-3	USB programming cable (eSetup Easergy Pro)	REL52822	X	X
VX054	Profibus interface cable with external power supply connection	REL52841	X	X
VX082	P3U (RS232) - VSE(D9) cable	REL52825	X	X
VX083	P3U (RS232) - Remote/Ext. (3xD9) cable	REL52826	X	X
VX084	P3U (RS232) - VPA 3CG cable	REL52827	X	X
P3UPSC	P3U Panel Seal Cover	REL52833	X	X
VYX860	Projection mounting frame, P3U, 45 mm	REL52834	X	X
P3UWAF	Wall mounting kit P3U	REL52836	X	X
P3UPAV200	P3U to VAMP200-cut out adapter plate	REL52837	X	X
EMS59572	Voltage adapter - 47… 240 V - RJ45 output	EMS59572		X
EMS59573	LPVT hub connector, RJ45 input - RJ45 output	EMS59573		X
CCA770	Screened Ethernet cable between LPVT hub or Voltage adapter and P3 relay, 0.6 m	59660		X
CCA772	Screened Ethernet cable between LPVT hub or Voltage adapter and P3 relay, 2 m	59661		X
CCA774	Screened Ethernet cable between LPVT hub or Voltage adapter and P3 relay, 4 m	59662		X
VW3A8306RC	LPVT hub termination, use this if all LPVT are not present	VW3A8306RC		X

13 Firmware revision

Table 179 - Firmware revisions

FW revision	Changes
Version: 30.208 **Release date:** October 2024	• Added two stages for directional earth fault overcurrent (total five stages) • New scaling settings for conventional VT connection to PowerLogic™ P3 LPVT input (via adapter) • Improved method to monitor Circuit Breaker open and close time • Added busbar voltage measurement on P3G32 local HMI and eSetup Easergy Pro in DiffGenTra mode • Added bias current view to PowerLogic™ P3 Advanced differential relays' local HMI & eSetup Easergy Pro Setting tool • Adjustable time delay setting for object's closing operation • Configurable Virtual Inputs with adjustable pulse timer • Various communication parameter updates • Disabling remote configuration, communication port locking by password
Version: 30.207 **Release date:** October 2023	• Range name changed to PowerLogic P3 • Require eSetup Easergy Pro version >= 4.5.0 • Communications ◦ More parameters to Modbus, SPA and Profibus ◦ Added "Time to re-start" and "Thermal capacity" to Modbus, IEC103, DNP 3, IEC101/104 and IEC 61850 ◦ Modbus setting parameter to ANSI 47 and ANSI 25 stages ◦ Protocols assigned as Ethernet protocol 1 and 2 are checked by firewall rules ◦ IEC 104 protocol now available by default ◦ f<<< to IEC 61850, IEC 101/103/104 and DNP3 • P3U10 application remove • Edge sensitive logic gate added • Intermittent e/f (67NI) spike detection enhancement • 3-phase VT fuse failure added • Uo measurement scalable to primary in HMI and communication protocols • Frequency available in the sample mode DR • Added phase wise fault current & engine running hours & bias currents on HMI
Version: 30.206 **Release date:** October 2022	• Added vector shift protection for P3U30 • Added power direction setting • Calculated residual voltage available in sample mode disturbance recording • Added 5th under frequency stage • Shorter operate time for under frequency protection (now 80 ms) • Added VI5-VI12 to mimic display • Communications ◦ IEC 104 communication protocol added (consult Schneider Electric's representative for availability) ◦ Added DI / DO signals to SPA, Ethernet IP and IEC 103 ◦ Added SOTF TRIP, Io>>>>> START/TRIP, IoDir>>> START/TRIP, Uc> START/TRIP, Uo>>> START/TRIP to IEC 101/103/104 and DNP3 ◦ Added Iv> START/TRIP, If5> START/TRIP to IEC 101/104 DNP3

FW revision	Changes
Version: 30.205 **Release date:** October 2021	• Support for the new CSH sensor I_0 input (applies to P3Ux, P3F30, P3G30, P3L30, and P3M30) • Added residual voltage calculation for intermittent earth fault (67NI) • Frequency stage improvement • Global trip line to output matrix • Local panel control no longer requires activation of the Operator access level when it is disabled in the **Objects** setting view • HMI password enhancement with letters and characters • Communication: ◦ IEC61850 new LN (LTIM) added for time management ◦ IEC61850 new LN (ZMOT) added for running hours ◦ Modbus update to access arc sensor status ◦ New timeout mechanism added for Telnet/Serial/Http connections (not applicable to ANSI model)
Version: 30.204 **Release date:** January 2021	• Phase rotation configuration ABC to ACB for voltage and currents • Communications: ◦ IEC61850 and Modbus: Alarm setting and operations left parameters for circuit breaker monitoring ◦ Ethernet/IP communication protocol restored back to use • Cybersecurity: ◦ Removed Administrator account due to cybersecurity requirement.
Version: 30.203 **Release date:** July 2020	• I>>> stage latch function upgrade during the power on-off-on state • RSTP network reconstruction optimization • Adjusted time stamps for disturbance recorder and events logs • Backlight off default timeout changed to 10 min • Added Modbus registers for alarm setting of CB wear (read) and Operation left data (read) • DNP3 updates: ◦ Added function 24 record current time ◦ Added VO and LED status to BI data list ◦ Added the possibility to configure time reference to UTC
Version: 30.202 **Release date:** July 2020	• LPIT support ◦ for P3U30 and P3F30 models only ◦ The high-speed arc flash current (Arc I>) is not supported in this release. ◦ CT secondary in slot 8 adjustable to 1–10 A • Modbus ◦ Added PME/PSO support ◦ Voltage measurements descriptions
Version: 30.201 **Release date:** January 2020	Cybersecurity improvements: • passwords are stored as salted hash • password resetting procedure changed • new user account Administrator added • editing output matrix and several communication settings through Ethernet interface blocked

FW revision	Changes
Version: 30.111 **Release date:** October 2019	• Improved menu titles for COM ports and Ethernet ports in the **Protocol Configuration** menu • IEC-61850 speed optimizations • Modbus: ◦ registers to include protection function status ◦ added LED status information
Version: 30.110 **Release date:** August 2019	• ANSI terminology • Digital inputs 33–36 added to DNP and IEC 101 protocol • Phase-wise cumulative breaking current over IEC 61850 • Temperature LN to IEC 61850 • Add VI5-20 and VO7-20 added to IEC 103 protocol mapping • Ethernet/IP protocol removed
Version: 30.109 **Release date:** March 2019	• Negative sequence voltage U_2>, U_2>> and U_2>>>(ANSI 47) stages added. • Maximum number of disturbance records increased from 12 to 24.
Version: 30.108 **Release date:** December 2018	• Intermittent earth fault (ANSI 67NI) changed: ◦ New start setting "Sensitive/Normal" and U_0 check for trip added • CB condition monitoring upgraded with opening counts and opening, closing and charging times • Fault locator enhanced to allow multiple line segments. • COMTRADE files can be read over Modbus. • Product and vendor data changed to Schneider Electric in EDS file. This change affects CIP protocols: DeviceNet and Ethernet/IP. • Pole slip protection (ANSI 78) added for P30G and P3G32. • New CBFP functions added: "CBFP1" and "CBFP2". • Restricted earth fault protection (ANSI 64REF) for P3T32 and P3G32. • Faulty phase detection added for ANSI 67N (I_0Dir) stage. • Ethernet's redundancy protocols are now in separate menus.
Version: 30.106 **Release date:** 16.5.2018	• The setting "Inv. time coefficient k" in stages I>, Iφ>, Iφ>>, Io>, Ioφ>, Ioφ>>, Ioφ>>> has three decimals instead of two and the minimum value for the earth fault overcurrent was changed from 0.05 to 0.025. • Communication protocol updates
Version: 30.104 **Release date:** 2.10.2017	First release

Schneider Electric
35 rue Joseph Monier
92500 Rueil Malmaison - France
Phone: +33 (0) 1 41 29 70 00
www.schneider-electric.com

As standards, specifications, and designs change from time to time,
please ask for confirmation of the information given in this publication.

© 2024 Schneider Electric All Rights Reserved.

P3U/EN/M/30-208A — 10/2024