# Product data sheet

Specifications

## EMC input filter, Altivar, Lexium, 15A, 3 phases, 380 to 500V

VW3A4422

**Product availability: Stock - Normally stocked in distribution facility**

## Main

| | |
|---|---|
| **Range of Product** | Altivar<br>Lexium |
| **Product or Component Type** | EMC input filter |
| **Range Compatibility** | Altivar 32<br>Altivar Machine ATV340<br>Lexium 32<br>Altivar Machine ATV320<br>Lexium 28<br>Lexium 52 |
| **Product compatibility** | LXM28A<br>ATV32, 380...500 V, 0.37...1.5 kW<br>LXM32, three-phase, line current 1.2...8.7 A<br>Variable speed drive ATV320...B 0.37 kW, 380...500 V, three phase<br>Variable speed drive ATV320...B 0.55 kW, 380...500 V, three phase<br>Variable speed drive ATV320...B 0.75 kW, 380...500 V, three phase<br>Variable speed drive ATV320...B 1.1 kW, 380...500 V, three phase<br>Variable speed drive ATV320...B 1.5 kW, 380...500 V, three phase<br>Variable speed drive ATV320...B 2.2 kW, 380...500 V, three phase<br>Variable speed drive ATV320...B 3 kW, 380...500 V, three phase<br>Variable speed drive ATV320...B 4 kW, 380...500 V, three phase<br>Variable speed drive ATV340 0.75 kW, 380...480 V<br>Variable speed drive ATV340 1.5 kW, 380...480 V |
| **Product Specific Application** | Radio interference input filter |
| **Mounting Location** | At variable speed drive side |
| **Phase** | Three phase |

## Complementary

| | |
|---|---|
| **Maximum cable distance between devices** | 65.6 ft (20 m) IEC 61800-3 category C1<br>164.04 ft (50 m) IEC 61800-3 category C2<br>328.08 ft (100 m) IEC 61800-3 category C3 |
| **Line Rated Current** | 15 A |
| **Thermal losses** | 9.9 W |
| **Network rated voltage** | 380…500 V |
| **Tolerance** | - 15...10 % |
| **Net Weight** | 2.0 lb(US) (0.9 kg) |
| **Emc filter compatibility** | Type 022 |

## Ordering and shipping details

| | |
|---|---|
| **Category** | US1CP4B22152 |
| **Discount Schedule** | CP4B |
| **GTIN** | 3606480166891 |

Price is “List Price” and may be subject to a trade discount – check with your local distributor or retailer for actual price.

Disclaimer: This documentation is not intended as a substitute for and is not to be used for determining suitability or reliability of these products for specific user applications

| | |
|---|---|
| **Returnability** | Yes |
| **Country of origin** | TH |

## Packing Units

| | |
|---|---|
| **Unit Type of Package 1** | PCE |
| **Nbr. of units in pkg.** | 1 |
| **Package 1 Height** | 2.047 in (5.200 cm) |
| **Package 1 Width** | 6.220 in (15.800 cm) |
| **Package 1 Length** | 9.134 in (23.200 cm) |
| **Package weight(Lbs)** | 33.016 oz (936.000 g) |
| **Unit Type of Package 2** | P06 |
| **Number of Units in Package 2** | 80 |
| **Package 2 Height** | 29.528 in (75.000 cm) |
| **Package 2 Width** | 23.622 in (60.000 cm) |
| **Package 2 Length** | 31.496 in (80.000 cm) |
| **Package 2 Weight** | 192.684 lb(US) (87.400 kg) |

## Contractual warranty

| | |
|---|---|
| **Warranty** | 18 months |

## Environmental Data

Schneider Electric aims to achieve Net Zero status by 2050 through supply chain partnerships, lower impact materials, and circularity via our ongoing “Use Better, Use Longer, Use Again” campaign to extend product lifetimes and recyclability.

Environmental Data explained

How we assess product sustainability

### Use Better

#### Materials and Substances

| | |
|---|---|
| Packaging made with recycled cardboard | **No** |
| Packaging without single use plastic | **No** |
| EU RoHS Directive | **Pro-active compliance (Product out of EU RoHS legal scope)** |
| California proposition 65 | **WARNING: This product can expose you to chemicals including: Lead and lead compounds, which is known to the State of California to cause cancer and birth defects or other reproductive harm. For more information go to www.P65Warnings.ca.gov** |

### Use Again

#### Repack and remanufacture

| | |
|---|---|
| Take-back | **No** |

## Dimensions Drawings

### Additional EMC Input Filters

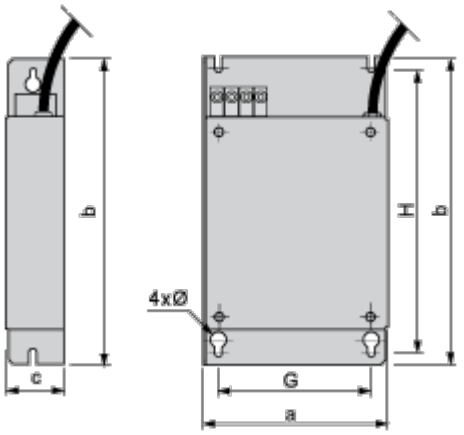


Dimensions in mm

| a | b | c | G | H | Ø |
|---|---|---|---|---|---|
| 107 | 195 | 42 | 85 | 180 | 4.5 |

Dimensions in in.

| a | b | c | G | H | Ø |
|---|---|---|---|---|---|
| 4.21 | 7.68 | 1.65 | 3.35 | 7.09 | 0.18 |

Mounting and Clearance

## Mounting Recommendations

### Mounting the Filter on the Side of the Drive

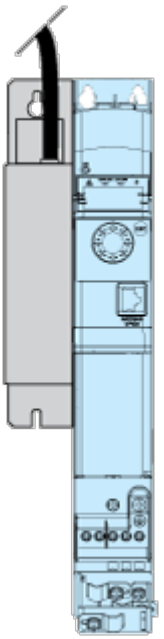

## Connections and Schema

### Recommended Schema

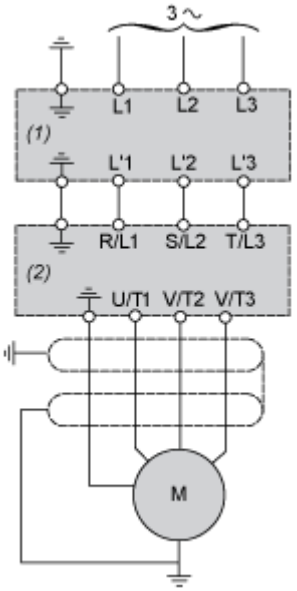


(1) Filter

(2) Drive