# Product data sheet

Specifications

## Head for illuminated selector switch, Harmony XB5, grey bezel, blue handle, 22mm, universal LED, 2 positions

ZB5AK1263C0

**Product availability: Non-Stock - Not normally stocked in distribution facility**
**Important message: A change in appearance may be noted on the product but does not affect its use in terms of function and safety. This makes it compatible with our Universal LED blocks**

## Main

| | |
|---|---|
| **Range of Product** | Harmony XB5 |
| **Product or Component Type** | Head for illuminated selector switch |
| **Product Compatibility** | Universal LED |
| **Device short name** | ZB5 |
| **Bezel material** | Plastic colour plated grey |
| **Mounting diameter** | 0.9 in (22 mm) |
| **Head type** | Standard |
| **Sale per indivisible quantity** | 1 |
| **Shape of signaling unit head** | Round |
| **Type of operator** | stay put |
| **Operator profile** | Blue standard handle |
| **Operator position information** | 2 positions 90° |

## Complementary

| | |
|---|---|
| **CAD overall width** | 1.1 in (29 mm) |
| **CAD overall height** | 1.1 in (29 mm) |
| **CAD overall depth** | 1.7 in (43 mm) |
| **Net Weight** | 0.035 lb(US) (0.016 kg) |
| **Mechanical durability** | 1000000 cycles |
| **Station name** | XALD 1...5 cut-outs<br>XALK 2...5 cut-outs |
| **Electrical composition code** | M3 4 single front mounting integral LED<br>M6 2 single front mounting integral LED and transformer<br>M10 2 single front mounting integral LED<br>MF1 2 single front mounting integral LED<br>MR1 2 single rear mounting integral LED<br>M4 4 single and double front mounting integral LED |
| **Device presentation** | Basic element |

## Environment

| | |
|---|---|
| **Protective treatment** | TH |

Price is “List Price” and may be subject to a trade discount – check with your local distributor or retailer for actual price.

Disclaimer: This documentation is not intended as a substitute for and is not to be used for determining suitability or reliability of these products for specific user applications

| | |
|---|---|
| **Ambient Air Temperature for Storage** | -40…158 °F (-40…70 °C) |
| **Ambient air temperature for operation** | -40…158 °F (-40…70 °C) |
| **Overvoltage category** | Class II conforming to IEC 60536 |
| **IP degree of protection** | IP66 IEC 60529<br>IP67 |
| **NEMA degree of protection** | NEMA 13<br>NEMA 4X |
| **Resistance to high pressure washer** | 1015.3 psi (7000000 Pa) 131 °F (55 °C) 0.1 m |
| **IK degree of protection** | IK04 conforming to IEC 50102 |
| **Standards** | EN/IEC 60947-5-5<br>UL 508<br>EN/IEC 60947-5-4<br>EN/IEC 60947-1<br>EN/IEC 60947-5-1<br>CSA C22.2 No 14<br>JIS C8201-5-1<br>JIS C8201-1 |
| **Product Certifications** | CSA<br>DNV<br>BV<br>LROS (Lloyds register of shipping)<br>UL Listed |
| **Vibration resistance** | 5 gn (f= 2…500 Hz) conforming to IEC 60068-2-6 |
| **Shock resistance** | 30 gn 18 ms) half sine wave acceleration IEC 60068-2-27<br>50 gn 11 ms) half sine wave acceleration IEC 60068-2-27 |

## Ordering and shipping details

| | |
|---|---|
| **Category** | US10CS222467 |
| **Discount Schedule** | 0CS2 |
| **GTIN** | 3606489767266 |
| **Returnability** | Yes |
| **Country of origin** | FR |

## Packing Units

| | |
|---|---|
| **Unit Type of Package 1** | PCE |
| **Nbr. of units in pkg.** | 1 |
| **Package 1 Height** | 1.7 in (4.2 cm) |
| **Package 1 Width** | 1.3 in (3.3 cm) |
| **Package 1 Length** | 2.05 in (5.2 cm) |
| **Package weight(Lbs)** | 0.8 oz (24.0 g) |

## Environmental Data

Schneider Electric aims to achieve Net Zero status by 2050 through supply chain partnerships, lower impact materials, and circularity via our ongoing “Use Better, Use Longer, Use Again” campaign to extend product lifetimes and recyclability.

Environmental Data explained >

How we assess product sustainability >

### Environmental footprint

| | |
|---|---|
| Environmental Disclosure | **Product Environmental Profile** |

## Use Better

### Materials and Substances

| | |
|---|---|
| Packaging made with recycled cardboard | **Yes** |
| Packaging without single use plastic | **Yes** |
| EU RoHS Directive | **Pro-active compliance (Product out of EU RoHS legal scope)** |
| REACh Regulation | **REACh Declaration** |
| California proposition 65 | **WARNING: This product can expose you to chemicals including: Di-isodecyl phthalate (DIDP), which is known to the State of California to cause birth defects or other reproductive harm. For more information go to www.P65Warnings.ca.gov** |

## Use Again

### Repack and remanufacture

| | |
|---|---|
| Circularity Profile | **End of Life Information** |
| Take-back | **No** |

Dimensions Drawings

## Dimensions

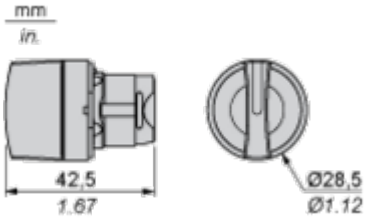

## Mounting and Clearance

### Panel Cut-out for Pushbuttons, Switches and Pilot Lights (Finished Holes, Ready for Installation)

### Connection by Screw Clamp Terminals or Plug-in Connectors or on Printed Circuit Board

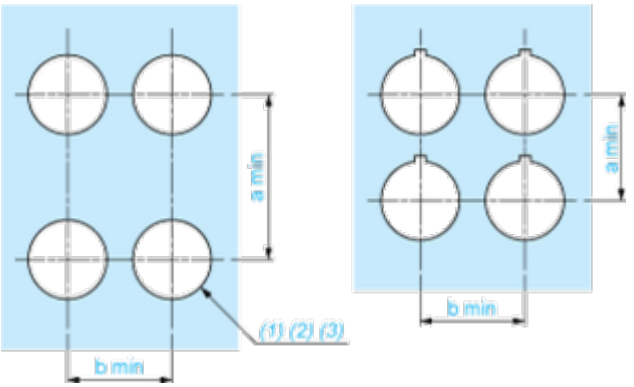


**(1)** Diameter on finished panel or support
**(2)** For selector switches and Emergency stop buttons, use of an anti-rotation plate type ZB5AZ902 is recommended.
**(3)** Ø22.5 mm recommended (Ø22.3 $_{0}^{+0.4}$) / Ø0.89 in. recommended (Ø0.88 in. $_{0}^{+0.016}$)

| Connections | a in mm | a in in. | b in mm | b in in. |
|---|---|---|---|---|
| By screw clamp terminals or plug-in connector | 40 | 1.57 | 30 | 1.18 |
| By Faston connectors | 45 | 1.77 | 32 | 1.26 |
| On printed circuit board | 30 | 1.18 | 30 | 1.18 |

### Detail of Lug Recess

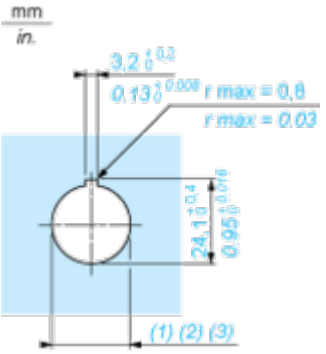


**(1)** Diameter on finished panel or support
**(2)** For selector switches and Emergency stop buttons, use of an anti-rotation plate type ZB5AZ902 is recommended.
**(3)** Ø22.5 mm recommended (Ø22.3 $_{0}^{+0.4}$) / Ø0.89 in. recommended (Ø0.88 in. $_{0}^{+0.016}$)

## Pushbuttons, Switches and Pilot Lights for Printed Circuit Board Connection

### Panel Cut-outs (Viewed from Installer's Side)

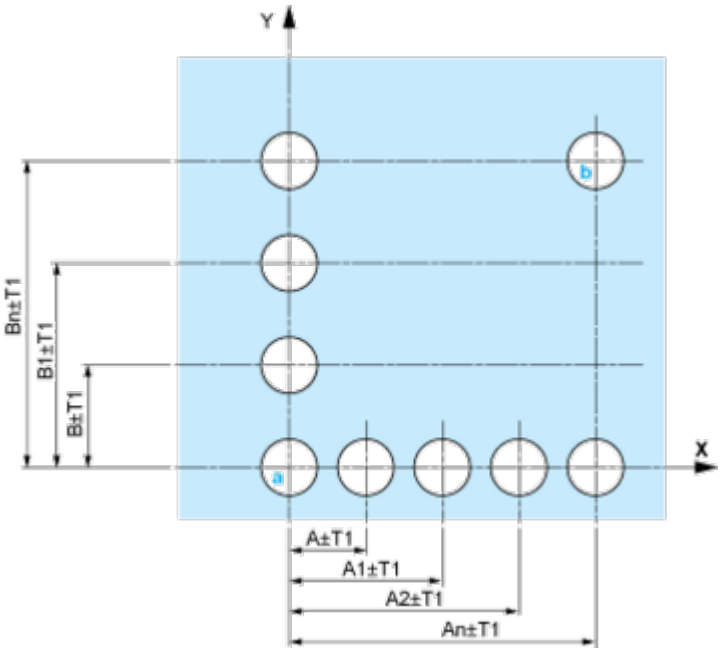


**A:** 30 mm min. / 1.18 in. min.
**B:** 40 mm min. / 1.57 in. min.

### Printed Circuit Board Cut-outs (Viewed from Electrical Block Side)

Dimensions in mm

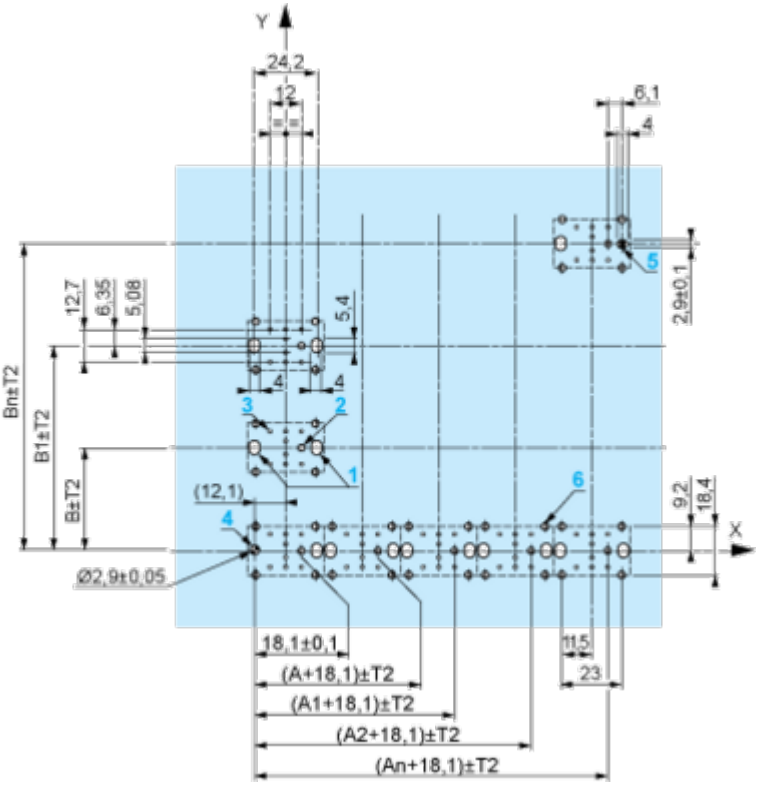


**A:** 30 mm min.
**B:** 40 mm min.
Dimensions in in.

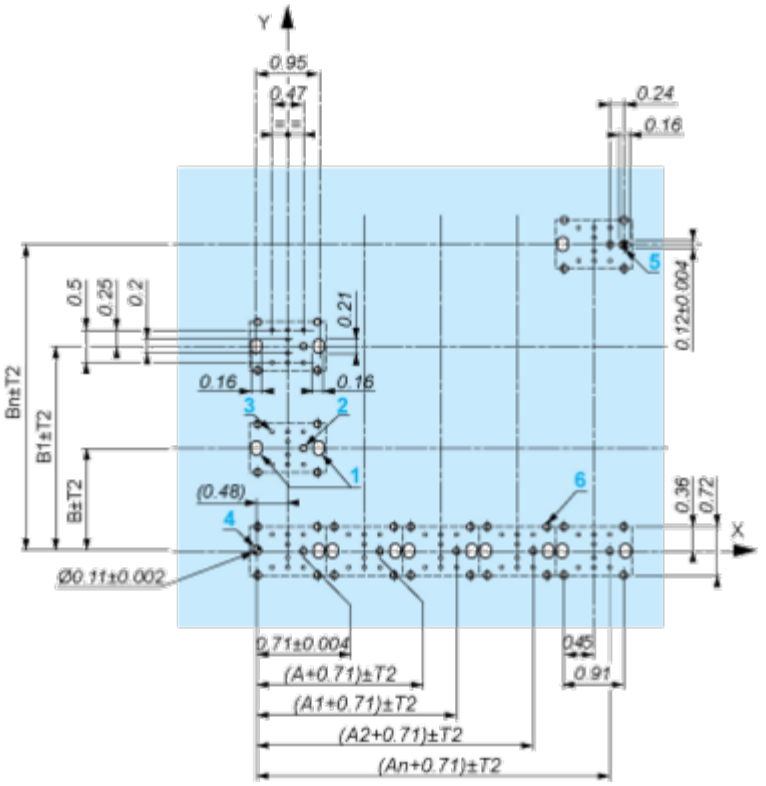


**A:** 1.18 in. min.
**B:** 1.57 in. min.

### General Tolerances of the Panel and Printed Circuit Board

The cumulative tolerance must not exceed 0.3 mm / 0.012 in.: T1 + T2 = 0.3 mm max.

### Installation Precautions

- Minimum thickness of circuit board: 1.6 mm / 0.06 in.
- Cut-out diameter: 22.4 mm ± 0.1 / 0.88 in. ± 0.004
- Orientation of body/fixing collar ZB5AZ009: ± 2°30' (excluding cut-outs marked **a** and **b**).
- Tightening torque of screws ZBZ006: 0.6 N.m (5.3 lbf.in) max.
- Allow for one ZB5AZ079 fixing collar/pillar and its fixing screws:
  - every 90 mm / 3.54 in. horizontally (X), and 120 mm / 4.72 in. vertically (Y).
  - with each selector switch head (ZB5AD•, ZB5AJ•, ZB5AG•).

The fixing centers marked **a** and **b** are diagonally opposed and must align with those marked **4** and **5**.

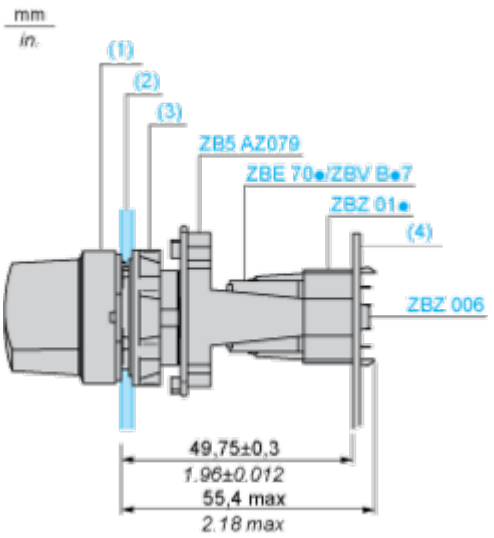

**(1)** Head ZB5AD•
**(2)** Panel
**(2)** Nut
**(4)** Printed circuit board

### Mounting of Adapter (Socket) ZBZ01•

- **1** 2 elongated holes for ZBZ006 screw access
- **2** 1 hole Ø 2.4 mm ± 0.05 / 0.09 in. ± 0.002 for centring adapter ZBZ01•
- **3** 8 × Ø 1.2 mm / 0.05 in. holes
- **4** 1 hole Ø 2.9 mm ± 0.05 / 0.11 in. ± 0.002, for aligning the printed circuit board (with cut-out marked **a**)
- **5** 1 elongated hole for aligning the printed circuit board (with cut-out marked **b**)
- **6** 4 holes Ø 2.4 mm / 0.09 in. for clipping in adapter ZBZ01•

Dimensions An + 18.1 relate to the Ø 2.4 mm ± 0.05 / 0.09 in. ± 0.002 holes for centring adapter ZBZ01•.

Technical Description

**Electrical Composition Corresponding to Code M3**

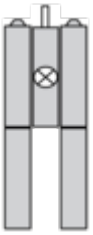

## Electrical Composition Corresponding to Code M4

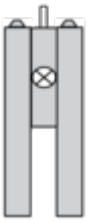

## Electrical Composition Corresponding to Codes M6 and P2

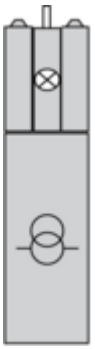

## Electrical Composition Corresponding to Codes M5, M10, MF1, MR1 and MF2

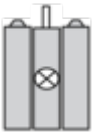

## Legend

Single contact

Double contact

Light block

Possible location

## Sequence of Contacts Fitted to 2-position Selector Switch Body

### Position 315°

| | | | | | |
|---|---|---|---|---|---|
| **Push** | Position | Top | ■ | | ■ |
| | | Bottom | ▲ | | ▲ |
| | Location | | Left | | Right |
| | State | | 0 | | 0 |
| **Contacts** | N/O | | open | | open |
| | N/C | | closed | | closed |

### Position 45°

| | | | | | |
|---|---|---|---|---|---|
| **Push** | Position | Top | | | |
| | | Bottom | ■ | | ■ |
| | Location | | Left | | Right |
| | State | | 1 | | 1 |
| **Contacts** | N/O | | closed | | closed |
| | N/C | | open | | open |

Technical Illustration

## Dimensions

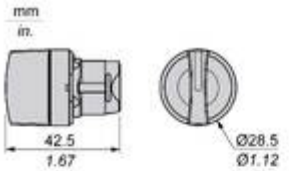


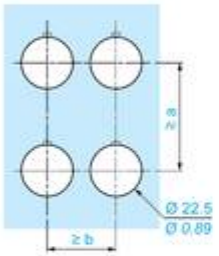


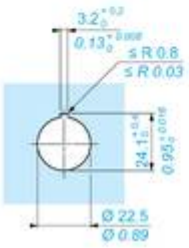


| | | a (mm) | a (in.) | b (mm) | b (in.) |
|---|---|---|---|---|---|
| ZBE●●●●● | ZBV●●●● | 40 | 1.57 | 30 | 1.18 |
| ZBE●●●●●3 | ZBV●●●●3 | 45 | 1.77 | 32 | 1.26 |
| ZBE●●●●●4 | ZBV●●●●4 | 40 | 1.57 | 30 | 1.18 |
| ZBE●●●●●5 | ZBV●●●●5 | 50 | 1.97 | 30 | 1.18 |
| ZBE●●●●●9 | ZBV●●●●9 | 40 | 1.57 | 30 | 1.18 |
| ZBRT● | ZBRV1 | 40 | 1.57 | 30 | 1.18 |

Offer Marketing Illustration

## Product benefits / Features

Offer Marketing Illustration

**Product benefits / Features**

Image of product / Alternate images
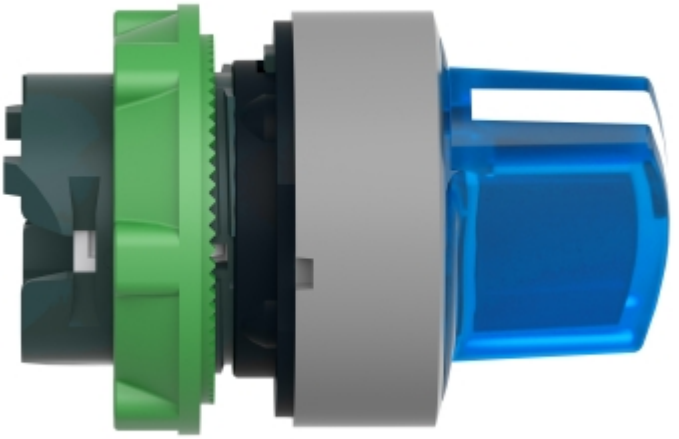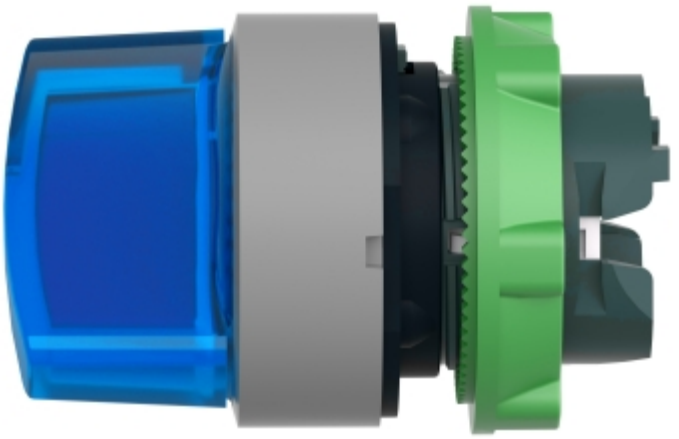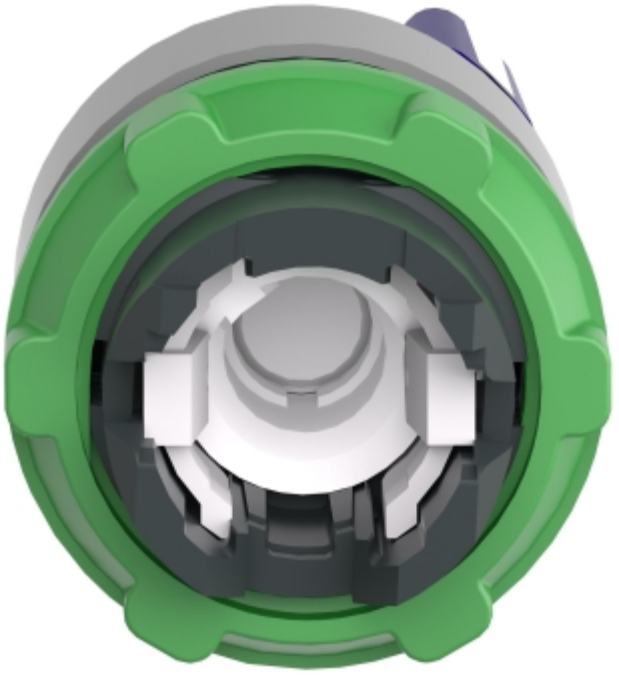
**Alternative**