Product data sheet

Specifications

3-phase stepper motor - 19.7Nm - shaft Ã˜19mm - L=230mm - w/o brake - connector

BRS3ADW851ACB

Product availability: Non-Stock - Not normally stocked in distribution facility

Main

Range Compatibility	Lexium SD3
Product or Component Type	Motion control motor
Device short name	BRS3
Maximum mechanical speed	3000 rpm
Motor Type	3-phase stepper motor
Number of motor poles	6
Supply voltage limits	230 V AC 325 V DC
Mounting Support	Flange
Motor flange size	4.3 in (110 mm)
Length	9.0 in (228 mm)
Centring collar diameter	2.2 in (56 mm)

Complementary

Centring collar depth	0.1 in (3 mm)
Number of mounting holes	4
Mounting holes diameter	0.4 in (9 mm)
Circle diameter of the mounting holes	4.96 in (125.86 mm)
Electrical Connection	Connector
Feedback type	Index pulse
Speed feedback resolution	10000 points/turn
Holding brake	Without
Shaft end	Parallel key
Second shaft	With second shaft end
Shaft diameter	0.7 in (19 mm)
Shaft length	1.6 in (40 mm)
nominal torque	146.04 lbf.in (16.5 N.m)
Peak stall torque	145.59 lbf.in (16.45 N.m)
Continuous stall torque	145.59 lbf.in (16.45 N.m)
Holding torque	174.4 lbf.in (19.7 N.m)
Rotor inertia	16 kg.cm²

Price is “List Price” and may be subject to a trade discount – check with your local distributor or retailer for actual price.

Disclaimer: This documentation is not intended as a substitute for and is not to be used for determining suitability or reliability of these products for specific user applications

Resolution	1.8 °, 0.9 °, 0.72 °, 0.36 °, 0.18 °, 0.09 °, 0.072 °, 0.036 ° step angle 200, 400, 500, 1000, 2000, 4000, 5000, 10000 steps number of full steps per revolution 1000 points/turn
Accuracy error	+/- 6 arc min
Maximum starting frequency	4.7 kHz
Line Rated Current	4.75 A
Resistance	1.9 Ohm winding)
Time constant	22 ms
Maximum radial force Fr	150 N second shaft end) 300 N first shaft end)
Maximum axial force Fa	330 N tensile force) 60 N force pressure)
Service life in hours	20000 h bearing)
Angular acceleration	200000 rad/s²
Net Weight	24.7 lb(US) (11.2 kg)

Environment

Standards	IEC 50347 IEC 60072-1
Type of cooling	Natural convection
Ambient Air Temperature for Operation	-13…104 °F (-25…40 °C)
Ambient Air Temperature for Storage	-13…158 °F (-25…70 °C)
Operating altitude	<= 3280.84 ft (1000 m) without power derating
Relative humidity	15…85 % without condensation
Vibration resistance	20 m/s² maximum A IEC 60034-14
IP degree of protection	IP41 shaft bushing: conforming to IEC 60034-5 IP56 total except shaft bushing: conforming to IEC 60034-5
Temperature class	F winding IEC 60034-1

Ordering and shipping details

Category	US1PC5518284
Discount Schedule	PC55
GTIN	3389119224307
Returnability	No
Country of origin	DE

Packing Units

Unit Type of Package 1	PCE
Nbr. of units in pkg.	1
Package 1 Height	7.5 in (19.0 cm)
Package 1 Width	7.09 in (18.0 cm)
Package 1 Length	15.4 in (39.0 cm)
Package weight(Lbs)	26.01 lb(US) (11.8 kg)

Contractual warranty

Warranty (in months)	18

Environmental Data

Schneider Electric aims to achieve Net Zero status by 2050 through supply chain partnerships, lower impact materials, and circularity via our ongoing “Use Better, Use Longer, Use Again” campaign to extend product lifetimes and recyclability.

Environmental Data explained >

How we assess product sustainability >

Environmental footprint

Carbon footprint (kg CO2 eq, Total Life cycle)	4689
Environmental Disclosure	Product Environmental Profile

Use Better

Materials and Substances

Packaging made with recycled cardboard	Yes
Packaging without single use plastic	No
EU RoHS Directive	Pro-active compliance (Product out of EU RoHS legal scope)
REACh Regulation	REACh Declaration
California proposition 65	WARNING: This product can expose you to chemicals including: Lead and lead compounds, which is known to the State of California to cause cancer and birth defects or other reproductive harm. For more information go to www.P65Warnings.ca.gov
PVC free	Yes

Use Again

Repack and remanufacture

Circularity Profile	No need of specific recycling operations
Take-back	No
WEEE Label	The product must be disposed on European Union markets following specific waste collection and never end up in rubbish bins.

Dimensions Drawings

Dimensions

3-Phase Stepper Motor in Connector Version

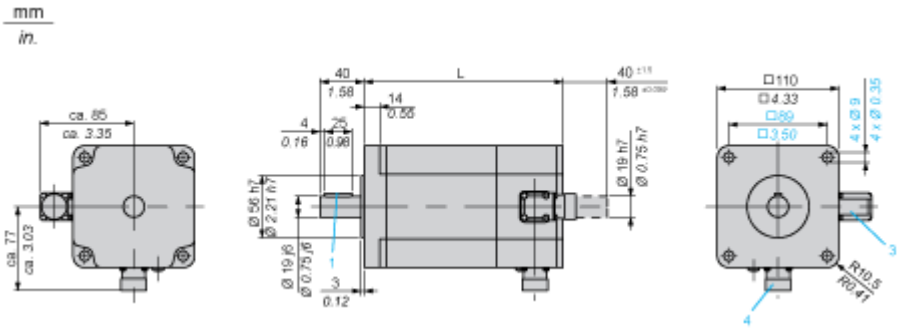

3 : Plug connection encoder (optional) 12 poles

4 : Plug connection motor 6 poles

Dimensions in mm

L	Parallel key DIN 6885 (1)
228 ±1	6 x 6 x 25

Dimensions in in.

L	Parallel key DIN 6885 (1)
8.98 ±0.039	0.24 x 0.24 x 0.98

Connections and Schema

Wiring Diagram of Encoder Plug on BRS3••

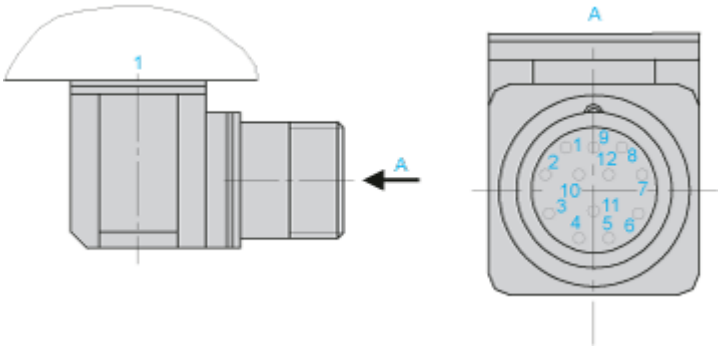

1 : Motor housing

Pin	Designation
1	A
2	A negated
3	B
4	B negated
5	C, I
6	C negated, I negated
7	5 V_{GND}
8	+ 5
9	-SENSE
10	+SENSE
11	Temperature sensor
12	Not connected

Performance Curves

Torque Characteristics

Measurement at 1000 Steps/Revolution, Nominal Voltage DC Bus U_N and Phase Current I_N

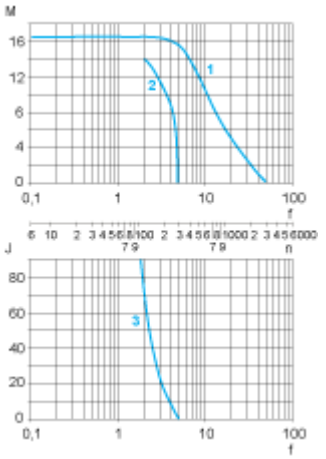

M : Torque in Nm

n : Speed in rpm

f : Frequency in kHz

J : Rotor inertia in $kg.cm^2$

1 : Pull-out torque

2 : Pull-in torque

3 : Maximum load inertia