Product data sheet

Specifications

current control relay, Harmony Control Relays, 5A, 2CO, overcurrent or undercurrent detection, 0.15...15A, 24...240V AC DC

RM35JA32MW

Product availability: Stock - Normally stocked in distribution facility

Main

Range of Product	Harmony Control Relays
Relay Type	Current control relay
Product or Component Type	Current control relay
Relay name	RM35JA
Relay monitored parameters	Overcurrent or undercurrent detection
Time delay type	Adjustable 0.3...30 s, 0 + 10 % Tt- time delay upon fault Adjustable 1...20 s, 0 + 10 % Ti- inhibition time delay upon startup
Switching capacity in VA	1250 VA
Minimum switching current	10 mA 5 V DC
Maximum switching current	5 A AC/DC
Maximum power consumption in VA	3.5 VA AC
Measurement range	150 mA...15 A current AC/DC
Utilisation category	AC-12 IEC 60947-5-1 AC-13 IEC 60947-5-1 AC-14 IEC 60947-5-1 AC-15 IEC 60947-5-1 DC-12 IEC 60947-5-1 DC-13 IEC 60947-5-1 DC-14 IEC 60947-5-1
Contacts type and composition	2 C/O

Complementary

Reset time	1500 ms time delay
Maximum switching voltage	250 V AC/DC
Supply voltage limits	20.4…264 V AC/DC
operating voltage tolerance	- 15 % + 10 % Un
Maximum power consumption in W	0.6 W DC
Control circuit frequency	40...70 Hz +/- 10 %
Resistance across terminals	0.005 Ohm E3-M terminals 0.015 Ohm E2-M terminals 0.05 Ohm E1-M terminals
Output contacts	2 C/O
Nominal output current	5 A

Price is “List Price” and may be subject to a trade discount – check with your local distributor or retailer for actual price.

Disclaimer: This documentation is not intended as a substitute for and is not to be used for determining suitability or reliability of these products for specific user applications

Maximum measuring cycle	30 ms measurement cycle as true rms value
Hysteresis	5…50 % threshold setting
delay at power up	0.3 s
Measurement accuracy	+/- 10 % of the full scale value
Repeat accuracy	+/- 0.5 % input and measurement circuit +/- 2 % time delay
Measurement error	0.05 %/°C with temperature variation 1 by volt over the whole range with voltage variation
Polarity	No DC
Threshold setting	10...100 %
Marking	CE : EMC 89/336/EEC CE : 73/23/EEC
Overvoltage category	III conforming to IEC 60664-1
Insulation resistance	> 500 MOhm 500 V DC between supply and relay output IEC 60255-5 > 500 MOhm 500 V DC between measurement and relay output IEC 60664-1 > 1 MOhm 500 V DC between supply and measurement IEC 60255-5 > 500 MOhm 500 V DC between supply and relay output IEC 60664-1 > 500 MOhm 500 V DC between measurement and relay output IEC 60255-5 > 1 MOhm 500 V DC between supply and measurement IEC 60664-1
[Ui] rated insulation voltage	250 V IEC 60664-1
Insulation	Between supply and measurement
Operating position	Any position without derating
Connections - terminals	Screw terminals, 1 x 0.5...1 x 4 mm² AWG 20...AWG 11) solid without cable end Screw terminals, 2 x 0.5...2 x 2.5 mm² AWG 20...AWG 14) solid without cable end Screw terminals, 1 x 0.2...1 x 2.5 mm² AWG 24...AWG 12) flexible with cable end Screw terminals, 2 x 0.2...2 x 1.5 mm² AWG 24...AWG 16) flexible with cable end
Tightening torque	5.3…8.9 lbf.in (0.6…1 N.m) IEC 60947-1
Housing material	Self-extinguishing plastic
Local signalling	LED (green) for power ON LED (yellow) for relay ON
Mounting support	35 mm symmetrical DIN rail conforming to IEC 60715
Electrical durability	100000 cycles
Mechanical durability	30000000 cycles
Operating rate	<= 360 operations/hour full load
[Us] rated supply voltage	24...240 V AC/DC 50/60 Hz, non self-powered
Safety reliability data	MTTFd = 296.8 years B10d = 270000
Contacts material	Cadmium free
Width	1.4 in (35 mm)
Control Type	Without test button
Net Weight	0.29 lb(US) (0.13 kg)

Environment

Immunity to microbreaks	50 ms
Electromagnetic compatibility	Emission standard for industrial environments conforming to IEC 61000-6-4 Emission standard for residential, commercial and light-industrial environments conforming to IEC 61000-6-3 Immunity for industrial environments conforming to NF EN/IEC 61000-6-2
Standards	IEC 60255-6

Product Certifications	GL UL GOST C-tick CSA
Ambient Air Temperature for Storage	-40…158 °F (-40…70 °C)
Ambient air temperature for operation	-4…122 °F (-20…50 °C)
Relative humidity	95 % 131 °F (55 °C) IEC 60068-2-30
Vibration resistance	0.35 mm (f= 5…57.6 Hz) conforming to IEC 60068-2-6 1 gn (f= 57.6…150 Hz) conforming to IEC 60255-21-1
Shock resistance	15 gn 11 ms IEC 60255-21-1
IP degree of protection	IP20 IEC 60529 terminals) IP30 IEC 60529 casing)
Pollution degree	3 IEC 60664-1
Dielectric test voltage	2 kV AC 50 Hz, 1 min IEC 60255-5 2 kV AC 50 Hz, 1 min IEC 60664-1
Non-dissipating shock wave	4 kV IEC 60255-5 4 kV IEC 60664-1 4 kV IEC 61000-4-5

Ordering and shipping details

Category	US10CP222380
Discount Schedule	0CP2
GTIN	3389119405225
Returnability	Yes
Country of origin	ID

Packing Units

Unit Type of Package 1	PCE
Nbr. of units in pkg.	1
Package 1 Height	1.772 in (4.500 cm)
Package 1 Width	3.150 in (8.000 cm)
Package 1 Length	3.740 in (9.500 cm)
Package weight(Lbs)	4.797 oz (136.000 g)
Unit Type of Package 2	S03
Number of Units in Package 2	48
Package 2 Height	11.811 in (30.000 cm)
Package 2 Width	11.811 in (30.000 cm)
Package 2 Length	15.748 in (40.000 cm)
Package 2 Weight	16.074 lb(US) (7.291 kg)

Contractual warranty

Warranty	18 months

Environmental Data

Schneider Electric aims to achieve Net Zero status by 2050 through supply chain partnerships, lower impact materials, and circularity via our ongoing “Use Better, Use Longer, Use Again” campaign to extend product lifetimes and recyclability.

Environmental Data explained >

How we assess product sustainability >

Environmental footprint

Carbon footprint (kg CO2 eq, Total Life cycle)	58
Environmental Disclosure	Product Environmental Profile

Use Better

Materials and Substances

Packaging made with recycled cardboard	Yes
Packaging without single use plastic	Yes
EU RoHS Directive	Pro-active compliance (Product out of EU RoHS legal scope)
SCIP Number	5e3fdf99-611b-4d07-ad17-6eba84ab488b
REACh Regulation	REACh Declaration
California proposition 65	WARNING: This product can expose you to chemicals including: Lead and lead compounds, which is known to the State of California to cause cancer and birth defects or other reproductive harm. For more information go to www.P65Warnings.ca.gov

Use Again

Repack and remanufacture

Circularity Profile	End of Life Information
Take-back	No

Dimensions Drawings

Current Control Relays

Dimensions and Mounting

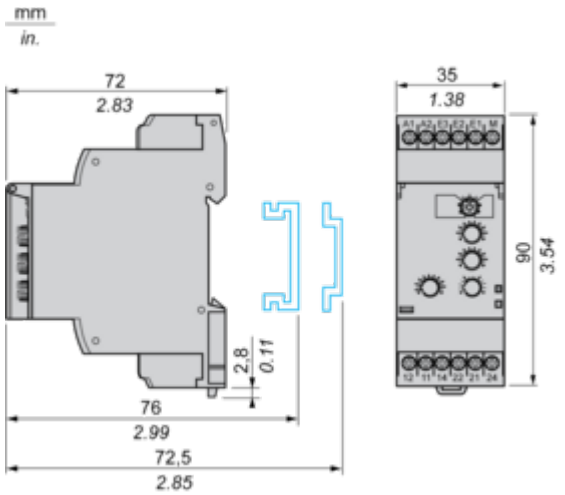

Connections and Schema

Current Control Relays

Wiring Diagram

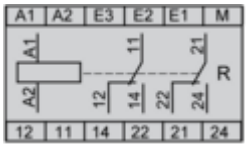

Application Schemes

Example: Detection of Jamming on a Crusher (Overcurrent Function)

Current measured ≤ 15 A

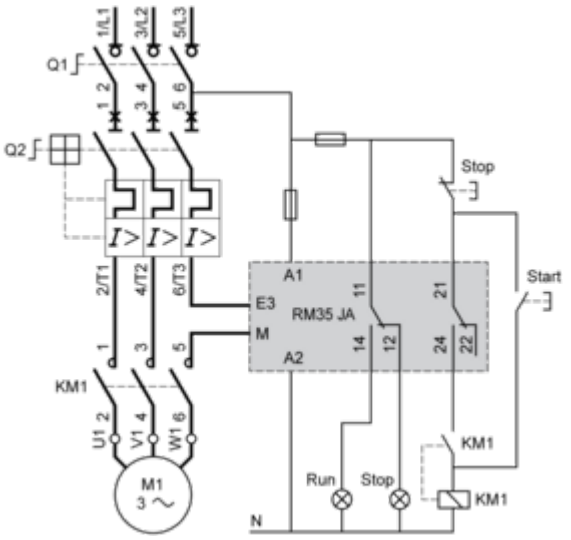

Current measured > 15 A

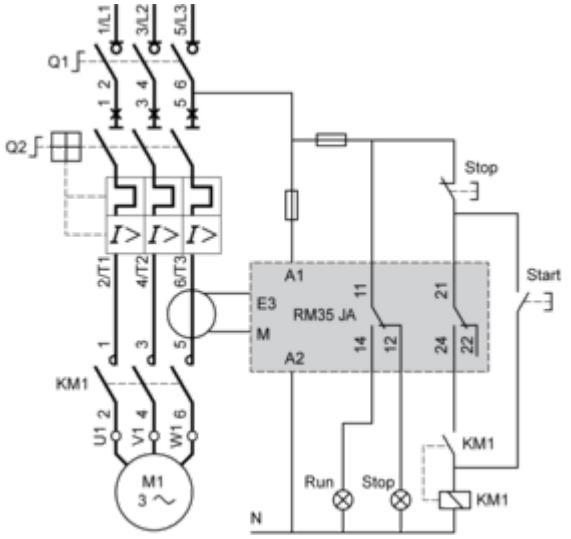

Technical Description

Function Diagrams

Undercurrent Detection

Without memory ("No Memory" mode)

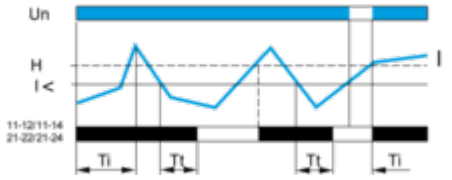

With memory ("Memory" mode)

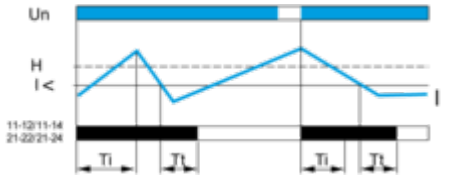

Overcurrent Detection

Without memory ("No Memory" mode)

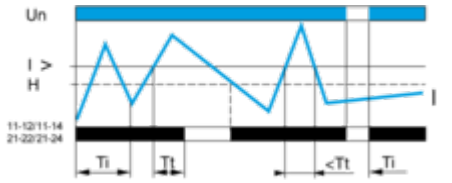

With memory ("Memory" mode)

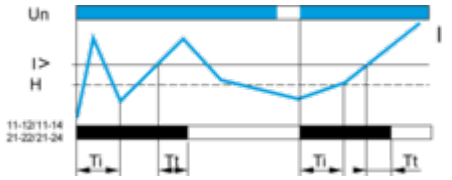

Legend

Ti Starting inhibition time delay
Tt Time delay after crossing of threshold
Un Supply voltage
I Monitored current
H Hysteresis
I> Overcurrent threshold
I< Undercurrent threshold
11-12/11-14, 21-22/21-24 Output relay connections
Relay status: black color = energized.

NOTE: In "Memory" mode, the relay opens when crossing of the threshold is detected and then stays in that position. The power supply voltage must be switched off to reset the product.

Technical Illustration

Dimensions

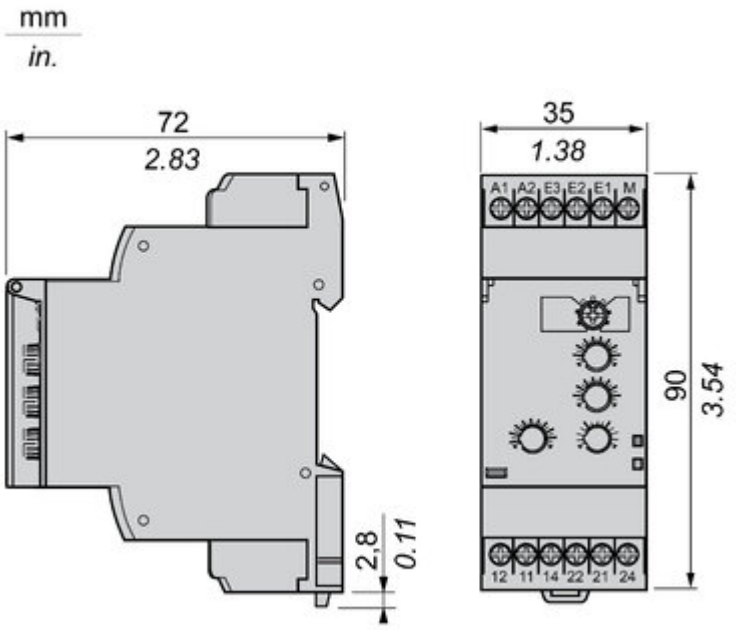

Offer Marketing Illustration

Product benefits / Features

Offer Marketing Illustration

Product benefits / Features

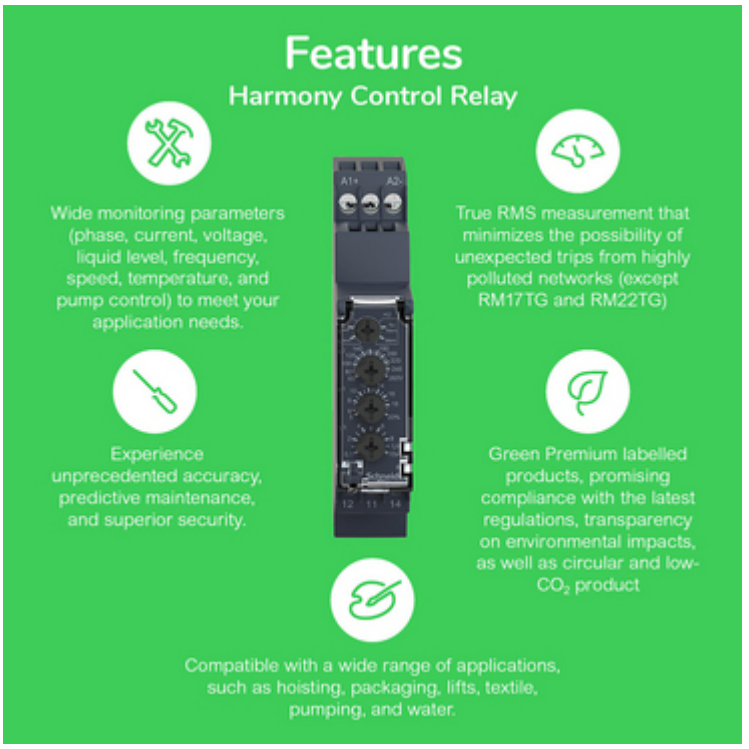

Image of product / Alternate images

Alternative

12
11
14
22
21
24
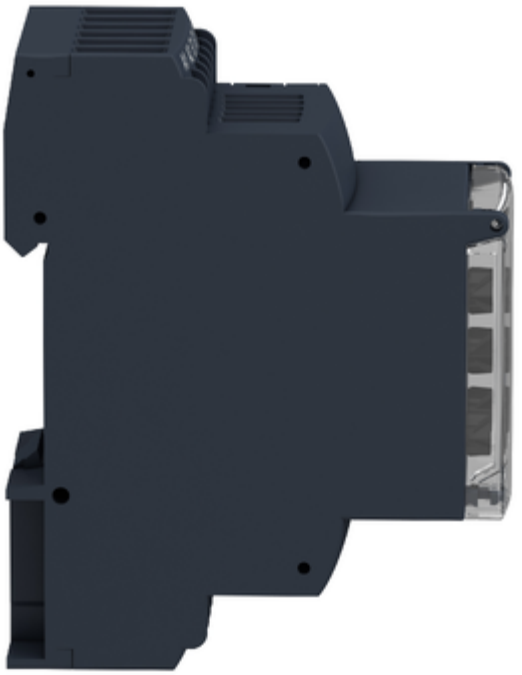
A1
A2
E3
E2
E1
M
I %
Hysteresis
Ti
Tt
Schneider
12
11
14
22
21
24