Product data sheet

Specifications

Timer, Harmony 9050 JCK, multifunction, programmable, 0.5 second to 999 hours, 10A, 240V AC, 24V AC/DC

9050JCK70V14

Product availability: Stock - Normally stocked in distribution facility

Main

product range	9050JCK
product type	Timer
timing mode	Watchdog On-delay and off-delay One shot falling edge One shot Trigger on-delay Off-delay On-delay Interval Repeat cycle
timing range	0.1...99.9 h 0.05...9.99 s 0.1...99.9 min 1...999 h 1...999 s 1...999 min
supply voltage	24 V AC

Complementary

power consumption	3 VA
current rating	10 A
switch function	DPDT
contact composition	2 NO + 2 NC
contact material	Silver nickel
maximum switching voltage	240 V AC
mounting type	Socket
number of pins	11
shape of pins	Tubular
for use with	8501NR62 8501NR61

Environment

certifications	UL Recognized CE UL Listed
ambient temperature range - operational	-18…150 °F (-28…66 °C)
Height	2.4 in (60 mm)

Price is “List Price” and may be subject to a trade discount – check with your local distributor or retailer for actual price.

Disclaimer: This documentation is not intended as a substitute for and is not to be used for determining suitability or reliability of these products for specific user applications

Width	1.7 in (44 mm)
Depth	3.6 in (91 mm)

Ordering and shipping details

Category	US10CP221652
Discount Schedule	0CP2
GTIN	785901053897
Returnability	Yes
Country of origin	US

Packing Units

Unit Type of Package 1	PCE
Nbr. of units in pkg.	1
Package 1 Height	1.900 in (4.826 cm)
Package 1 Width	2.500 in (6.350 cm)
Package 1 Length	4.300 in (10.922 cm)
Package weight(Lbs)	4.480 oz (127.006 g)

Contractual warranty

Warranty	18 months

Environmental Data

Schneider Electric aims to achieve Net Zero status by 2050 through supply chain partnerships, lower impact materials, and circularity via our ongoing “Use Better, Use Longer, Use Again” campaign to extend product lifetimes and recyclability.

Environmental Data explained

How we assess product sustainability

Environmental footprint

Carbon footprint (kg CO2 eq, Total Life cycle)	**50**
Environmental Disclosure	**Product Environmental Profile**

Use Better

Materials and Substances

Packaging made with recycled cardboard	**No**
Packaging without single use plastic	**No**
EU RoHS Directive	**Pro-active compliance (Product out of EU RoHS legal scope)**
REACh Regulation	**REACh Declaration**

Use Again

Repack and remanufacture

Circularity Profile	**End of Life Information**
Take-back	**No**

Dimensions Drawings

Approximate Dimensions

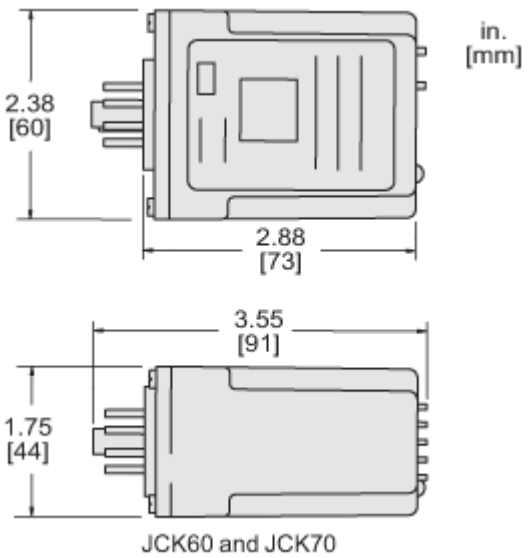

JCK60 and JCK70

Connections and Schema

Connections and Wiring Diagrams

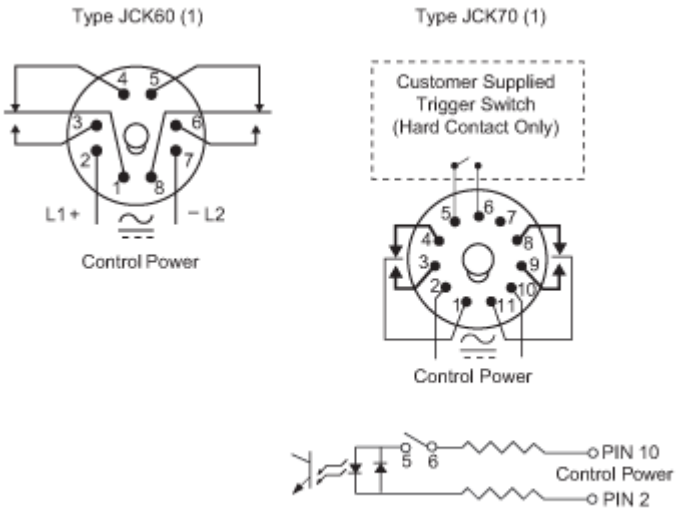

(1) Do not apply DC voltage to the 240 Vac timers (voltage code V24).

Image of product / Alternate images

Alternative

Ser. H
ELECTRICAL TIMING RELAY
RELEVADOR DE TEMPORIZACION ELECTRICO
RELAIS A TEMPORISATION ÉLECTRIQUE
Multi-Function / Multifunciones /
Multifonctions
0.05S - 999H
CONTACTS/CONTACTOS
1/2HP 120/240V~ (NO)
1/3HP 120/240V~ (NC)
10A-240V~, 30V RES.
AC15/B300 (NO/NC)
DC13/R300(NO)
LISTED ONLY
IND CONT WITH
EQ 29G6 SOCKET
SOLAMENTE CON ENCHUFE
SEULEMENT AVEC EMBASE
8501NR61, 8501NR62
INPUT
ENTRADA
ENTRÉE
1741
AA
214768
Made in USA. Hecho en EUA. Fabriqué aux E.-U.