Product data sheet

Specifications

Biometric switch bistable RGPD, Harmony XB5S, plastic, 22mm, USB, connection by 2m cable, 24V AC DC

XB5S8B2L2

Product availability: Non-Stock - Not normally stocked in distribution facility

Main

Product or Component Type	Biometric switch RGPD
Product Specific Application	Materials handling Industrial machines
Device short name	XB5S
Bezel material	Plastic
Mounting diameter	0.9 in (22 mm)
Output Type	PNP
Sale per indivisible quantity	1
IP degree of protection	IP20 IEC 60529 rear face) IP65 IEC 60529 front face)
Type of operator	Stay put
Operator position information	2 positions
Operator profile	fingerprint reader
Connections - terminals	1 pre-wired cable, 3 x 0.11 mm²
Memory usage	200 users with up to 2 fingerprints per user

Complementary

Software Designation	XB5SSoft
Enclosure Material	Polyamide PA66
Cable insulation material	PvR
Operating position	Vertical surface installation Flat surface installation Horizontal position
Function of module	Bi-stable
Net Weight	0.445 lb(US) (0.202 kg)
Marking	CE
port protocol	USB
Connector type	USB type A male 3.3 ft (1 m)
Local signalling	1 LED (green) for output state indicator 1 LED (red) for error
Short-circuit protection	250 mA external fuse gG
[Us] rated supply voltage	24 V DC
Electrical connection	free wire ends 3 6.6 ft (2 m)

Price is “List Price” and may be subject to a trade discount – check with your local distributor or retailer for actual price.

Disclaimer: This documentation is not intended as a substitute for and is not to be used for determining suitability or reliability of these products for specific user applications

Supply voltage limits	20…30 V DC
Protection Type	Reverse polarity Short-circuit Overload protection
Maximum switching current	200 mA
[Ures] residual voltage	1 V closed state
Current consumption	<= 70 mA no-load
Maximum delay first up	3 s + 0.5 ms per user registered
Maximum delay recovery	1.5 s
Maximum delay response	1.5 s

Environment

Range of Product	Harmony XB5S
Ambient Air Temperature for Storage	-13…158 °F (-25…70 °C)
Ambient Air Temperature for Operation	23…122 °F (-5…50 °C)
NEMA degree of protection	NEMA 12
Standards	IEC 61000-6-4 IEC 61000-6-2
Product Certifications	CSA UL
Vibration resistance	+/- 3 mm (f= 5…9 Hz) conforming to IEC 60068-2-6 1 gn (f= 9…500 Hz) conforming to IEC 60068-2-6
Shock resistance	50 gn 11 ms IEC 60068-2-27

Ordering and shipping details

Category	US1000I22471
Discount Schedule	000I
GTIN	3606489915490
Returnability	Yes
Country of origin	FR

Packing Units

Unit Type of Package 1	PCE
Nbr. of units in pkg.	1
Package 1 Height	2.795 in (7.100 cm)
Package 1 Width	3.898 in (9.900 cm)
Package 1 Length	7.323 in (18.600 cm)
Package weight(Lbs)	6.772 oz (192.000 g)

Contractual warranty

Warranty (in months)	18

Environmental Data

Schneider Electric aims to achieve Net Zero status by 2050 through supply chain partnerships, lower impact materials, and circularity via our ongoing “Use Better, Use Longer, Use Again” campaign to extend product lifetimes and recyclability.

Environmental Data explained >

How we assess product sustainability >

Environmental footprint

Carbon footprint (kg CO2 eq, Total Life cycle)	172
Environmental Disclosure	Product Environmental Profile

Use Better

Materials and Substances

Packaging made with recycled cardboard	Yes
Packaging without single use plastic	Yes
EU RoHS Directive	Compliant with Exemptions
REACh Regulation	REACh Declaration

Use Longer

Lifetime extension

Product repairability index	A

Use Again

Repack and remanufacture

Circularity Profile	End of Life Information
Take-back	No
WEEE Label	The product must be disposed on European Union markets following specific waste collection and never end up in rubbish bins.

Dimensions Drawings

Dimensions of Biometric Switches

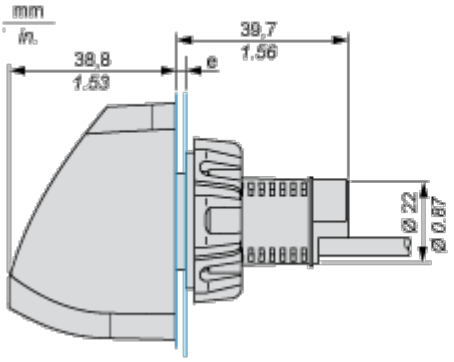

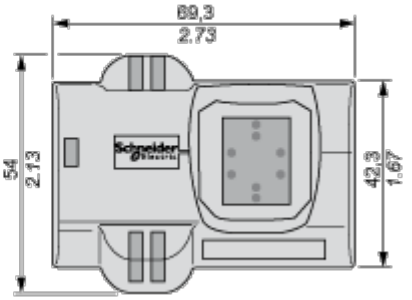

e: 1 to 6 mm / 0.04 to 0.24 in.

Connections and Schema

Cable with PNP Output

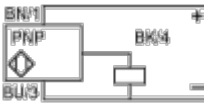

BU: Blue

BN: Brown

BK: Black

Technical Illustration

Dimensions

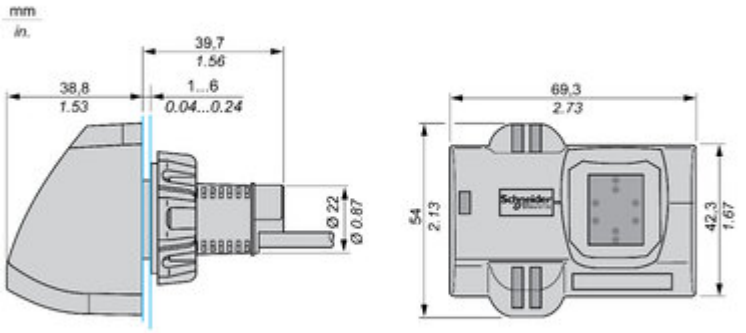

Technical Illustration

Wiring diagram

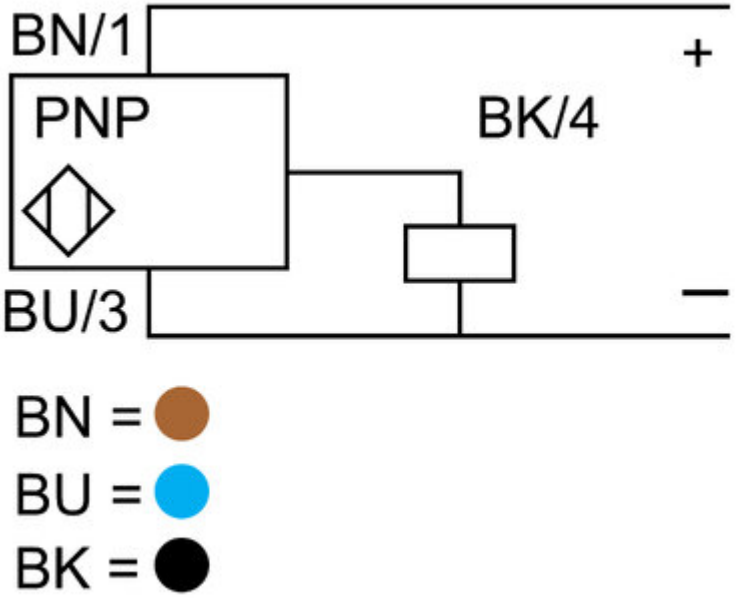

Offer Marketing Illustration

Product benefits / Features

Offer Marketing Illustration

Product benefits / Features

Image of product / Alternate images

Alternative

RGPD

RGPD

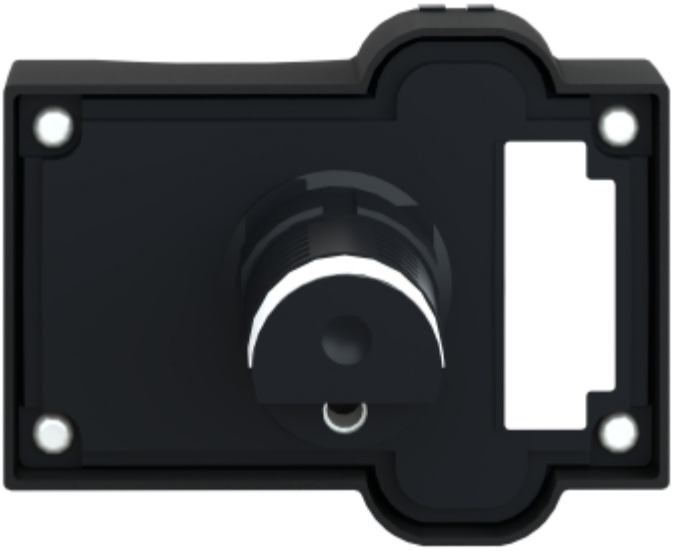

Image of product in real life situation