# Product data sheet

Specifications

## Head for pilot light, Harmony XB4, flush mounted, red, 30mm, with plain lens, universal LED

ZB4FV043

**Product availability: Stock - Normally stocked in distribution facility**
**Important message: A change in appearance may be noted on the product but does not affect its use in terms of function and safety. This makes it compatible with our Universal LED blocks**

## Main

| | |
|---|---|
| **Range of Product** | Harmony XB4 |
| **Product or Component Type** | Head for pilot light |
| **Product Compatibility** | Universal LED |
| **Device short name** | ZB4F |
| **Bezel material** | Chromium plated metal |
| **Mounting diameter** | 1.2 in (30.5 mm) |
| **Sale per indivisible quantity** | 1 |
| **Head type** | Built-in-flush |
| **Shape of signaling unit head** | Round |
| **Cap/operator or lens colour** | Red |
| **Operator additional information** | With plain lens |

## Complementary

| | |
|---|---|
| **CAD overall width** | 1.4 in (36.6 mm) |
| **CAD overall height** | 1.4 in (36.6 mm) |
| **CAD overall depth** | 1.2 in (31 mm) |
| **Net Weight** | 0.128 lb(US) (0.058 kg) |
| **Resistance to high pressure washer** | 1015.3 psi (7000000 Pa) 131 °F (55 °C) 0.1 m |
| **Electrical composition code** | P1 front mounting integral LED<br>P2 front mounting integral LED and transformer |
| **Device presentation** | Basic element |

## Environment

| | |
|---|---|
| **Protective treatment** | TH |
| **Ambient Air Temperature for Storage** | -40…158 °F (-40…70 °C) |
| **Ambient air temperature for operation** | -40…158 °F (-40…70 °C) |
| **Overvoltage category** | Class I conforming to IEC 60536 |

Price is “List Price” and may be subject to a trade discount – check with your local distributor or retailer for actual price.

Disclaimer: This documentation is not intended as a substitute for and is not to be used for determining suitability or reliability of these products for specific user applications

| | |
|---|---|
| **IP degree of protection** | IP66 IEC 60529<br>IP67 IEC 60529<br>IP69 IEC 60529<br>IP69K ISO 20653<br>Type 13 UL 50 E<br>Type 12 UL 50 E<br>Type 4 UL 50 E<br>Type 4X UL 50 E |
| **IK degree of protection** | IK06 conforming to IEC 50102 |
| **Standards** | IEC 60947-5-4<br>IEC 60947-5-1<br>UL 508<br>CSA C22.2 No 14<br>IEC 60947-1<br>JIS C8201-5-1<br>CE<br>JIS C8201-1 |
| **Product Certifications** | UL Listed<br>CSA<br>CCC<br>EAC |
| **Vibration resistance** | 5 gn (f= 10…500 Hz) conforming to IEC 60068-2-6<br>2 mm peak to peak (f= 2…10 Hz) conforming to IEC 60068-2-6 |
| **Shock resistance** | 30 gn 18 ms) half sine wave acceleration IEC 60068-2-27<br>50 gn 11 ms) half sine wave acceleration IEC 60068-2-27<br>25 gn 6 ms) 1000 shocks on each axis IEC 60068-2-27 |

## Ordering and shipping details

| | |
|---|---|
| **Category** | US10CS222468 |
| **Discount Schedule** | 0CS2 |
| **GTIN** | 3606489582555 |
| **Returnability** | Yes |
| **Country of origin** | FR |

## Packing Units

| | |
|---|---|
| **Unit Type of Package 1** | PCE |
| **Nbr. of units in pkg.** | 1 |
| **Package 1 Height** | 1.7 in (4.3 cm) |
| **Package 1 Width** | 2.05 in (5.2 cm) |
| **Package 1 Length** | 2.2 in (5.5 cm) |
| **Package weight(Lbs)** | 2.05 oz (58.0 g) |
| **Unit Type of Package 2** | S02 |
| **Number of Units in Package 2** | 80 |
| **Package 2 Height** | 5.9 in (15.0 cm) |
| **Package 2 Width** | 11.8 in (30.0 cm) |
| **Package 2 Length** | 15.7 in (40.0 cm) |
| **Package 2 Weight** | 11.138 lb(US) (5.052 kg) |

## Contractual warranty

| | |
|---|---|
| **Warranty** | 18 months |

## Environmental Data

Schneider Electric aims to achieve Net Zero status by 2050 through supply chain partnerships, lower impact materials, and circularity via our ongoing “Use Better, Use Longer, Use Again” campaign to extend product lifetimes and recyclability.

Environmental Data explained

How we assess product sustainability

### Environmental footprint

| | |
|---|---|
| Carbon footprint (kg CO2 eq, Total Life cycle) | 1 |
| Environmental Disclosure | Product Environmental Profile |

### Use Better

#### Materials and Substances

| | |
|---|---|
| Packaging made with recycled cardboard | Yes |
| Packaging without single use plastic | Yes |
| EU RoHS Directive | Pro-active compliance (Product out of EU RoHS legal scope) |
| REACh Regulation | REACh Declaration |

### Use Again

#### Repack and remanufacture

| | |
|---|---|
| Circularity Profile | End of Life Information |
| Take-back | No |

## Dimensions Drawings

### Dimensions

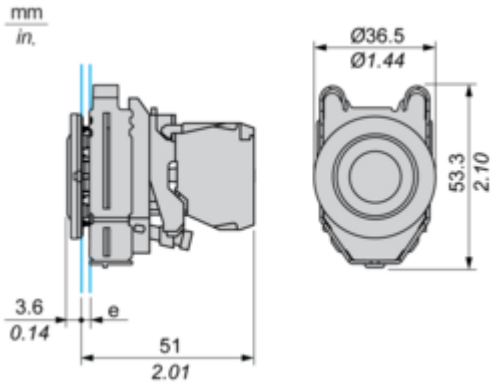


**e :** clamping thickness: 1 to 6 mm / 0.04 to 0.24 in.

## Mounting and Clearance

### Panel Cut-out for Pushbuttons, Switches and Pilot Lights (Finished Holes, Ready for Installation)

### Connection by Screw Clamp Terminals or Plug-in Connectors

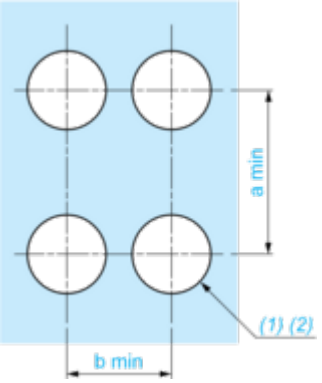


**(1) :** Diameter on finished panel or support

**(2) :** Ø30.75 mm recommended (Ø30.5 $_{0}^{+0.5}$) / Ø1.21 in. recommended (Ø1.20 in. $_{0}^{+0.0196}$)

| Connections | a in mm | a in in. | b in mm | b in in. |
|---|---|---|---|---|
| By connectors | 50 | 1.97 | 40 | 1.57 |
| By connectors and with legend holder ZBZF32 | 50 | 1.97 | 40 | 1.57 |
| By connectors and with legend holder ZBZF33 | 60 | 2.36 | 40 | 1.57 |

Technical Description

## Electrical Composition Corresponding to Codes P1, P3, PF1, PR1 and PF2

Light block

## Electrical Composition Corresponding to Codes M6 and P2

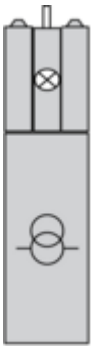

## Legend

Single contact

Double contact

Light block

Possible location

Technical Illustration

**Dimensions**

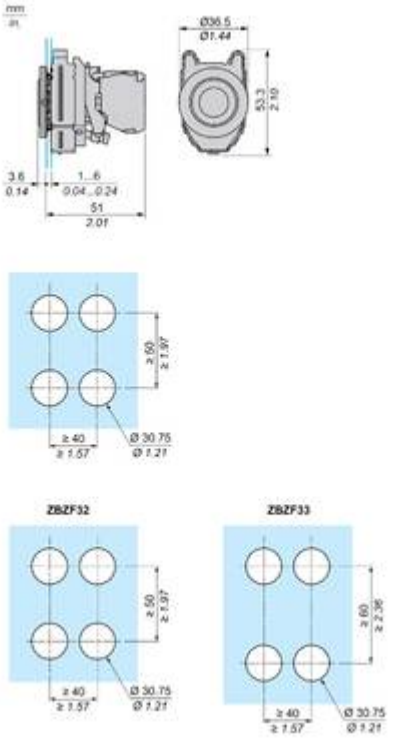

Offer Marketing Illustration

**Product benefits / Features**

Offer Marketing Illustration

**Product benefits / Features**

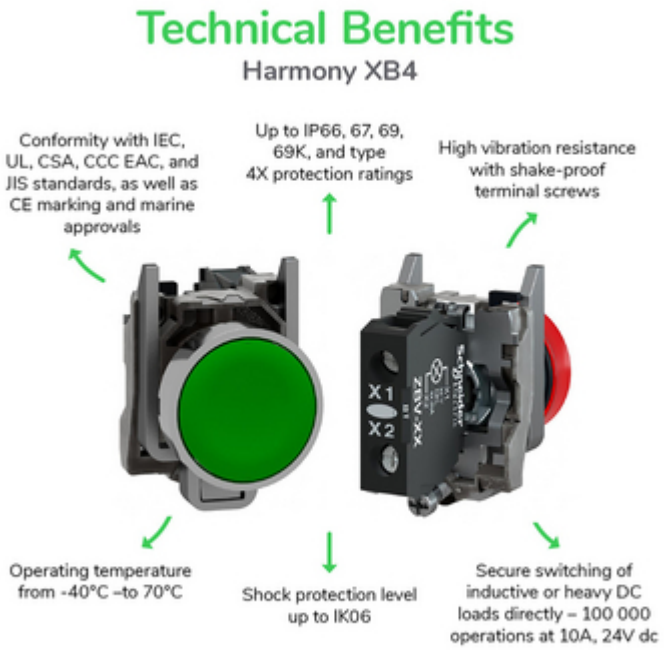

Offer Marketing Illustration

## Product benefits / Features

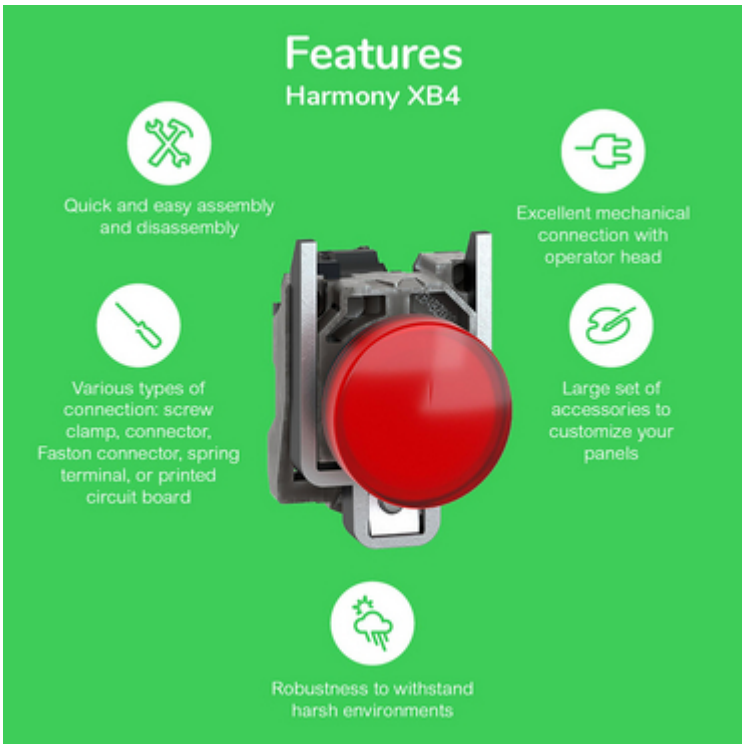

Image of product / Alternate images
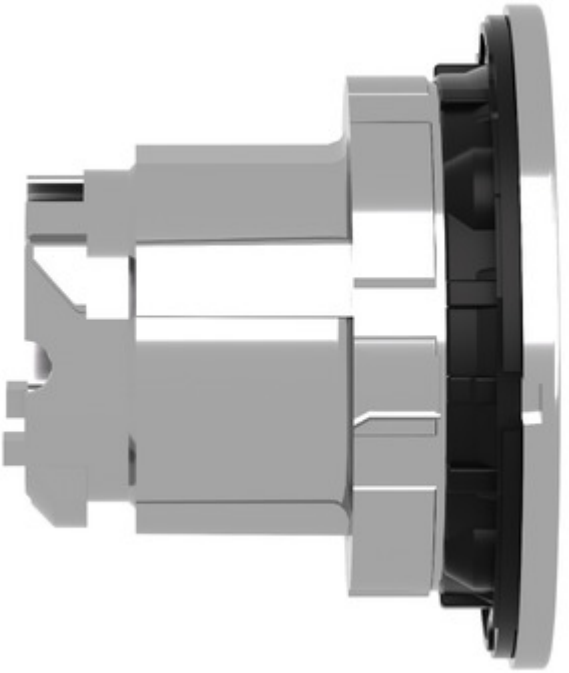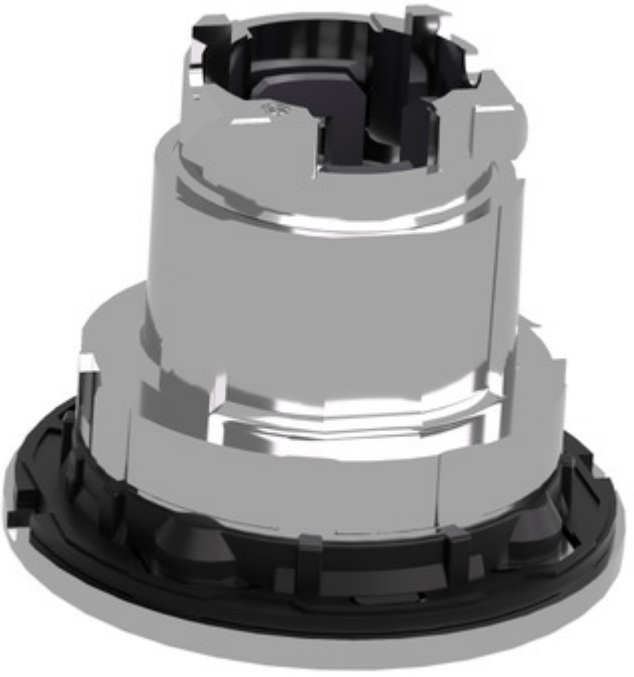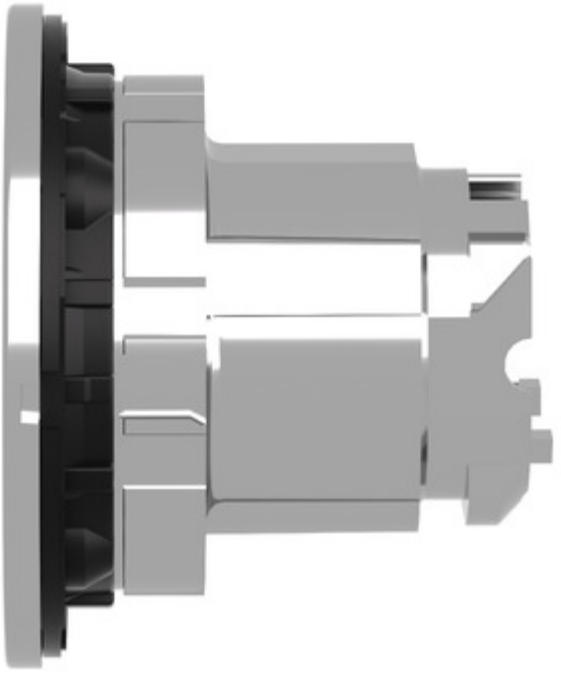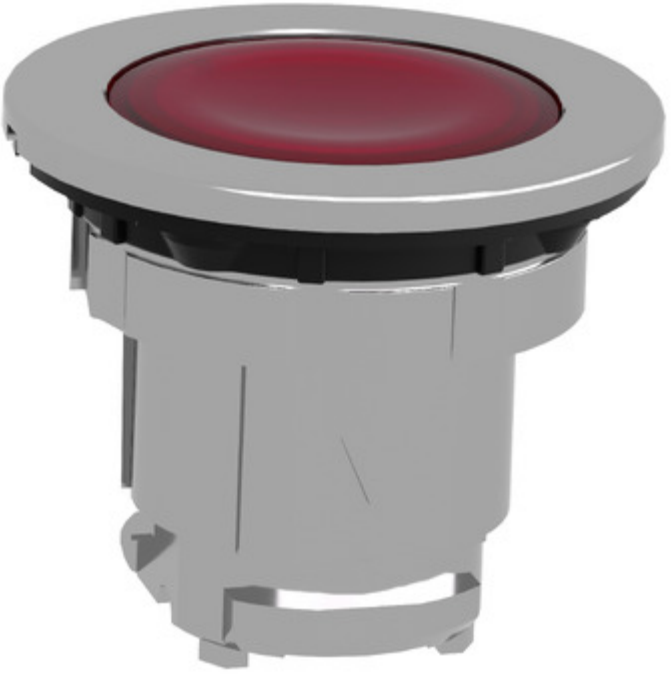
**Alternative**