Product data sheet

Specifications

Circuit breaker, LA, 400A, 3 pole, 600VAC, 22kA, 250VDC, 10kA, lugs, thermal magnetic

LAL36400

Product availability: Stock - Normally stocked in distribution facility

Main

Product or Component Type	Circuit breaker
Trip Unit Technology	Thermal-magnetic

Complementary

Line Rated Current	400 A
Number of Poles	3P
Mounting Mode	Unit mount
Magnetic Hold Current	2000 A
Magnetic Tripping Current	4000 A
Electrical connection	Lugs, load Lugs, line
Terminal identifier	AL400LA
Tightening torque	115.06 lbf.in (13 N.m) 0.07…0.5 in² (42…304 mm²) (AWG 1...600 kcmil) 115.06 lbf.in (13 N.m) 0.07…0.2 in² (42…127 mm²) (AWG 1...250 kcmil)
Height	11 in (279.4 mm)
Width	6 in (152.4 mm)
Depth	5.84 in (148.34 mm)
Circuit breaker application	HACR rated

Environment

Certifications	IEC CSA UL Listed

Ordering and shipping details

Category	US10DE200935
Discount Schedule	0DE2
GTIN	785901426868
Returnability	Yes
Country of origin	MX

Packing Units

Unit Type of Package 1	PCE
Nbr. of units in pkg.	1

Price is “List Price” and may be subject to a trade discount – check with your local distributor or retailer for actual price.

Disclaimer: This documentation is not intended as a substitute for and is not to be used for determining suitability or reliability of these products for specific user applications

Package 1 Height	9.250 in (23.495 cm)
Package 1 Width	11.500 in (29.210 cm)
Package 1 Length	17.500 in (44.450 cm)
Package weight(Lbs)	16.451 lb(US) (7.462 kg)
Unit Type of Package 2	PAL
Number of Units in Package 2	32
Package 2 Height	40.000 in (101.600 cm)
Package 2 Width	40.000 in (101.600 cm)
Package 2 Length	48.000 in (121.920 cm)
Package 2 Weight	674.000 lb(US) (305.721 kg)

Contractual warranty

Warranty	18 months

Environmental Data

Schneider Electric aims to achieve Net Zero status by 2050 through supply chain partnerships, lower impact materials, and circularity via our ongoing “Use Better, Use Longer, Use Again” campaign to extend product lifetimes and recyclability.

Environmental Data explained >

How we assess product sustainability >

Environmental footprint

Carbon footprint (kg CO2 eq, Total Life cycle)	1160
Environmental Disclosure	Product Environmental Profile

Use Better

Materials and Substances

Packaging made with recycled cardboard	Yes
Packaging without single use plastic	Yes
EU RoHS Directive	Compliant with Exemptions
SCIP Number	45160aaa-1457-439f-bca7-7bd5246ac23e
REACh Regulation	REACh Declaration
California proposition 65	WARNING: This product can expose you to chemicals including: DINP, which is known to the State of California to cause cancer, and DIDP, which is known to the State of California to cause birth defects or other reproductive harm. For more information go to www.P65Warnings.ca.gov
Halogen content performance	Halogen free plastic parts product
PVC free	Yes

Use Again

Repack and remanufacture

Recyclability potential, in %	58
Circularity Profile	No need of specific recycling operations
Take-back	No
WEEE Label	The product must be disposed on European Union markets following specific waste collection and never end up in rubbish bins.

Technical Illustration
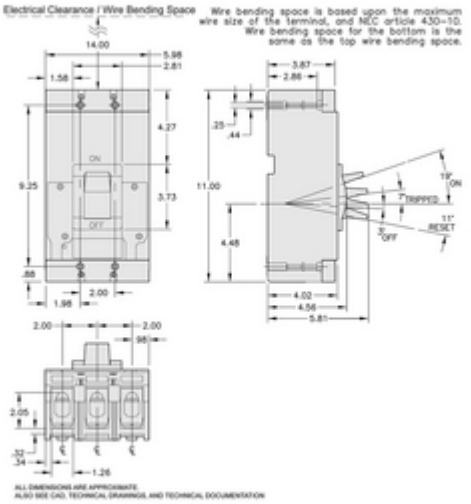
Dimensions