Product data sheet

Specifications

Regulated Power Supply, 100 to 240V AC, 48V, 2.5A, single phase, Optimized

ABLS1A48025

Product availability: Stock - Normally stocked in distribution facility

Main

Range of Product	Modicon Power Supply
Product or Component Type	Power supply
Power supply type	Regulated switch mode
Variant option	Optimized
Enclosure Material	Aluminum
Nominal input voltage	100...240 V AC single phase 100...240 V AC phase to phase 140...340 V DC
Kw Rating	120 W
Output voltage	48 V DC
Power supply output current	2.5 A

Complementary

Efficiency at full load	85...264 V AC without temperature derating 120...375 V DC without temperature derating
Nominal network frequency	50…60 Hz
Network system compatibility	TN TT IT
Maximum leakage current	1 mA 240 V AC
Input protection type	Integrated fuse (not interchangeable) 4 A External protection (recommended) 20 A Curve C External protection (recommended) 13 A Curve C
Inrush current	30.0 A 115 V 60.0 A 230 V
Power factor	0.55 at 115 V AC 0.45 at 230 V AC
Efficiency	85 % 115 V AC 88 % 230 V AC
Output voltage adjustment	44...56 V
Power dissipation in W	23 W
Current consumption	< 2.5 A 115 V AC < 1.4 A 230 V AC < 1.3 A 140 V DC
Turn-on time	< 1 s
Holding time	> 20 ms 115 V AC > 40 ms 230 V AC

Price is “List Price” and may be subject to a trade discount – check with your local distributor or retailer for actual price.

Disclaimer: This documentation is not intended as a substitute for and is not to be used for determining suitability or reliability of these products for specific user applications

Startup with capacitive loads	4000 µF
Residual ripple	< 150 mV
Meantime between failure [MTBF]	700000 h at 77 °F (25 °C), full load conforming to SR 332
Output protection type	Against overload and short-circuits, protection technology: automatic reset Against over temperature, protection technology: manual reset Against overvoltage, protection technology: manual reset
Connections - terminals	Screw connection 0.5...4 mm², AWG 20...AWG 12) without wire end ferrule output Screw connection 0.5...2.5 mm², AWG 20...AWG 14) with wire end ferrule output Screw connection 0.75...4 mm², AWG 18...AWG 12) without wire end ferrule input Screw connection 0.75...4 mm², AWG 18...AWG 12) with wire end ferrule input
Line and load regulation	< 0.5 % network 0 to 100 % load at 77 °F (25 °C) < 1 % network full voltage range in line at 77 °F (25 °C)
Status LED	1 LED (Green) output voltage
Depth	4.6 in (117.6 mm)
Height	4.9 in (123.6 mm)
Width	1.6 in (40 mm)
Net Weight	1.21 lb(US) (0.55 kg)
Output coupling	Parallel
Mounting support	Top hat type TH35-15 rail IEC 60715 Top hat type TH35-7.5 rail IEC 60715 Double-profile DIN rail
Supply	SELV IEC 60950-1 SELV IEC 60204-1 SELV IEC 60364-4-41
Dielectric strength	3000 V AC with input to output
Service life	10 year(s)
Overvoltage category	II

Environment

Standards	IEC 62368-1 EN/IEC 61204-3 IEC 61000-6-1 IEC 61000-6-2 IEC 61000-6-3 IEC 61000-6-4 IEC 61000-3-2 EN 61000-3-3 UL 62368-1 CSA C22.2 No 62368-1 UL 508 CSA C22.2 No. 107.1
Product certifications	CE CUL Listed CUL Recognized RCM CB Scheme EAC KC
Operating altitude	< 5000 m
Shock resistance	150 m/s² 11 ms
IP degree of protection	IP20

Ambient air temperature for operation	-4…14 °F (-20…-10 °C) with current derating of 2 % per °C mounting position A < 6561.68 ft (2000 m) 14…104 °F (-10…40 °C) without derating mounting position A 115 V AC < 6561.68 ft (2000 m) 14…122 °F (-10…50 °C) without derating mounting position A 230 V AC < 6561.68 ft (2000 m) 104…158 °F (40…70 °C) with current derating of 1.67 % per °C mounting position A 115 V AC < 6561.68 ft (2000 m) 122…158 °F (50…70 °C) with current derating of 2.5 % per °C mounting position A 230 V AC < 6561.68 ft (2000 m)
Electrical shock protection class	Class I
Pollution degree	2
Vibration resistance	3 mm (f= 2…9 Hz) conforming to IEC 60068-2-6 10 m/s² (f= 9…200 Hz) conforming to IEC 60068-2-6
Electromagnetic immunity	Immunity to electrostatic discharge - test level: 8 kV (contact discharge) conforming to IEC 61000-4-2 Immunity to electrostatic discharge - test level: 15 kV (air discharge) conforming to IEC 61000-4-2 Immunity to conducted RF disturbances - test level: 15 V/m (80 MHz...2 GHz) conforming to IEC 61000-4-3 Immunity to conducted RF disturbances - test level: 5 V/m (2...2.7 GHz) conforming to IEC 61000-4-3 Immunity to conducted RF disturbances - test level: 5 V/m (2.7...6 GHz) conforming to IEC 61000-4-3 Immunity to fast transients - test level: 4 kV (on input-output) conforming to IEC 61000-4-4 Surge immunity test - test level: 4 kV (between power supply and earth) conforming to IEC 61000-4-5 Surge immunity test - test level: 3 kV (between phases) conforming to IEC 61000-4-5 Immunity to conducted RF disturbances - test level: 15 V (0.15...80 MHz) conforming to IEC 61000-4-6 Immunity to magnetic fields - test level: 30 A/m (50...60 Hz) conforming to IEC 61000-4-8 Immunity to voltage dips conforming to IEC 61000-4-11 Disturbing field emission conforming to EN 55016-2-3 Limits for harmonic current emissions conforming to IEC 61000-3-2 conforming to EN 55016-1-2 conforming to EN 55016-2-1
Electromagnetic emission	Conducted emissions IEC 61000-6-3 Radiated emissions IEC 61000-6-4

Ordering and shipping details

Category	US1CP1222525
Discount Schedule	CP12
GTIN	3606481500243
Returnability	Yes
Country of origin	IN

Packing Units

Unit Type of Package 1	PCE
Nbr. of units in pkg.	1
Package 1 Height	2.008 in (5.100 cm)
Package 1 Width	6.811 in (17.300 cm)
Package 1 Length	7.047 in (17.900 cm)
Package weight(Lbs)	25.432 oz (721.000 g)
Unit Type of Package 2	S03
Number of Units in Package 2	13
Package 2 Height	11.811 in (30.000 cm)

Package 2 Width	11.811 in (30.000 cm)
Package 2 Length	15.748 in (40.000 cm)
Package 2 Weight	22.322 lb(US) (10.125 kg)

Environmental Data

Schneider Electric aims to achieve Net Zero status by 2050 through supply chain partnerships, lower impact materials, and circularity via our ongoing “Use Better, Use Longer, Use Again” campaign to extend product lifetimes and recyclability.

Environmental Data explained >

How we assess product sustainability >

Environmental footprint

Carbon footprint (kg CO2 eq, Total Life cycle)	996
Environmental Disclosure	Product Environmental Profile

Use Better

Materials and Substances

Packaging made with recycled cardboard	No
Packaging without single use plastic	No
EU RoHS Directive	Pro-active compliance (Product out of EU RoHS legal scope)
SCIP Number	698d9b2a-7a6a-4b8f-a149-489156f55645
REACh Regulation	REACh Declaration
California proposition 65	WARNING: This product can expose you to chemicals including: Lead and lead compounds, which is known to the State of California to cause cancer and birth defects or other reproductive harm. For more information go to www.P65Warnings.ca.gov

Use Again

Repack and remanufacture

Circularity Profile	End of Life Information
Take-back	No
WEEE Label	The product must be disposed on European Union markets following specific waste collection and never end up in rubbish bins.

Dimensions Drawings

Electrical Safety

- If the unit is use in a manner not specified by the manufacturer, the protection provided by the equipment may be impaired.
- For means of disconnection a switch or circuit breaker, located near the product, must be included in the installation. A marking as disconnecting device for the product is required.
- The device has an internal fuse. The unit is tested and approved with branch circuit protective device up to 20A. This circuit breaker can be used as disconnecting device.
- The power supply is only suitable for audio, video, information, communication, industrial and control equipment.

Dimensions

Front and Side Views

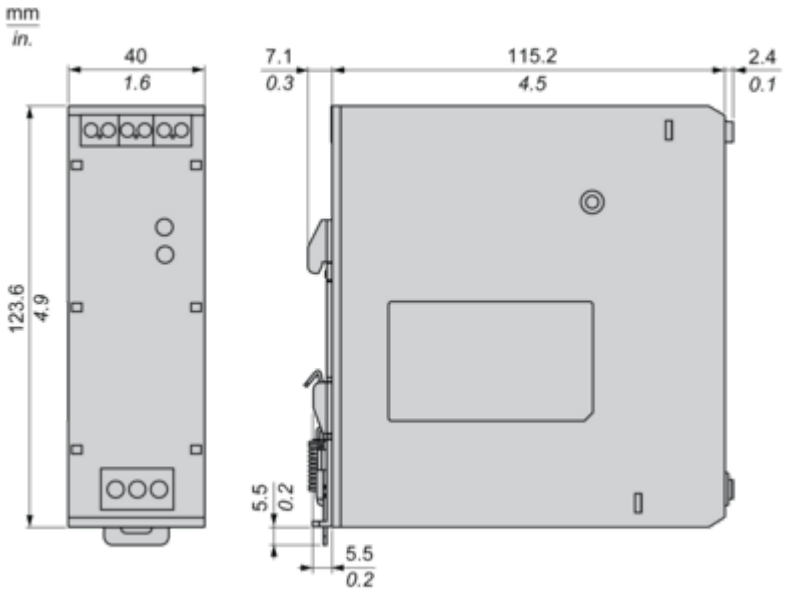

Connections and Schema

Connections and Schema

Correct Parallel Connection

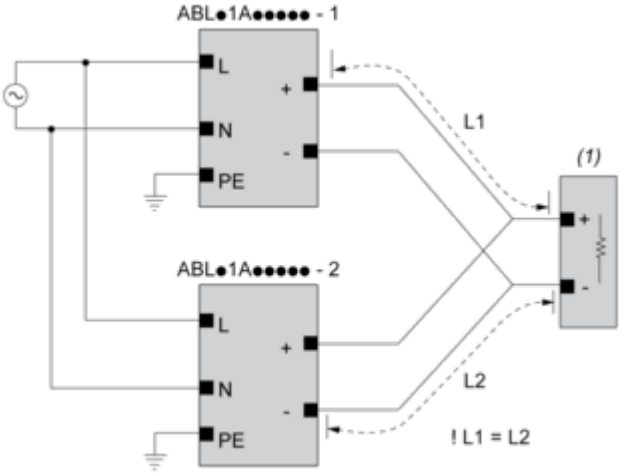

(1) : Load

Incorrect Parallel Connection

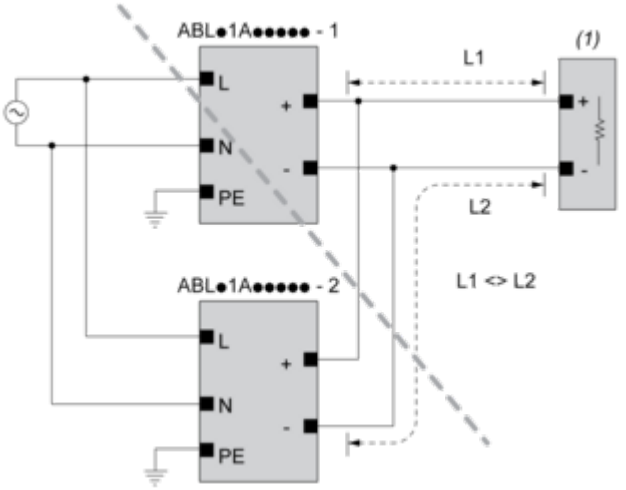

(1) : Load
ABLx1Axxxxx-1 = ABLx1Axxxxx-2
max 2 x ABLx1Axxxxx
L1 = L2
ΔV max 25 mV
I_{Load} < 90% 2 x I_{nom}

Output Voltage Balancing

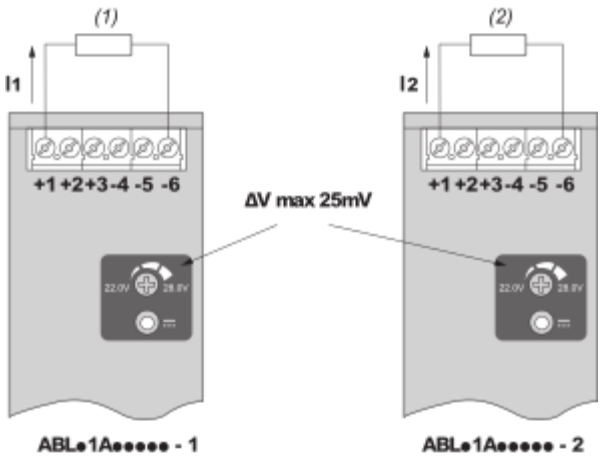

(1) : R_{Load1}

(2) : R_{Load2}

$R_{Load1} = R_{Load2}$

$I_1 = I_2 = \sim I_{nom}$

Connections and Schema

	(1)		
	<40ºC	<50ºC	<70ºC
ABLS1A24021	50ºC	60ºC	75ºC
ABLS1A24038	50ºC	60ºC	75ºC
ABLS1A12062	50ºC	60ºC	80ºC
ABLS1A24031	50ºC	60ºC	80ºC
ABLS1A12100	60ºC	70ºC	90ºC
ABLS1A24050	60ºC	70ºC	90ºC
ABLS1A48025	60ºC	70ºC	90ºC
ABLS1A24100	60ºC	70ºC	90ºC
ABLS1A24200	95ºC	95ºC	90ºC

(1) : Ambient

Mounting and Clearance

Mounting

Mounting Position A

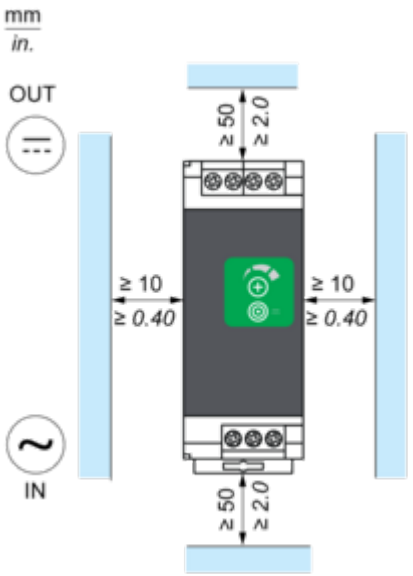

Mounting Position B

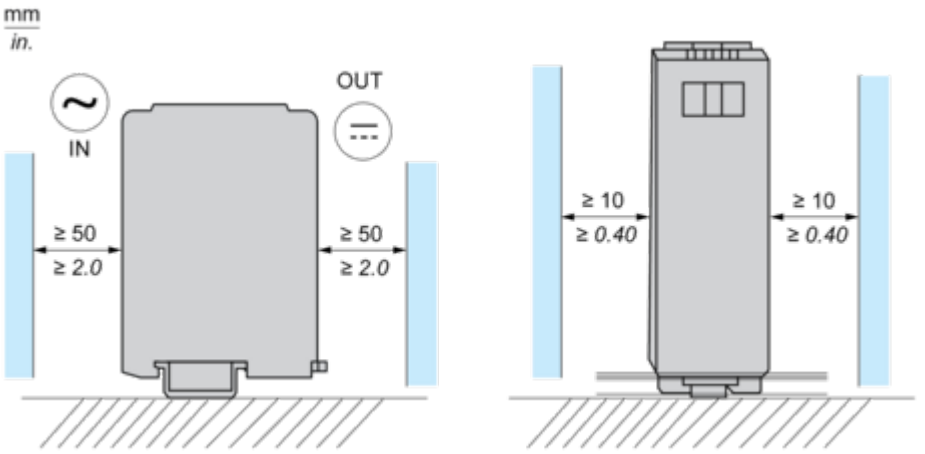

Incorrect Mounting

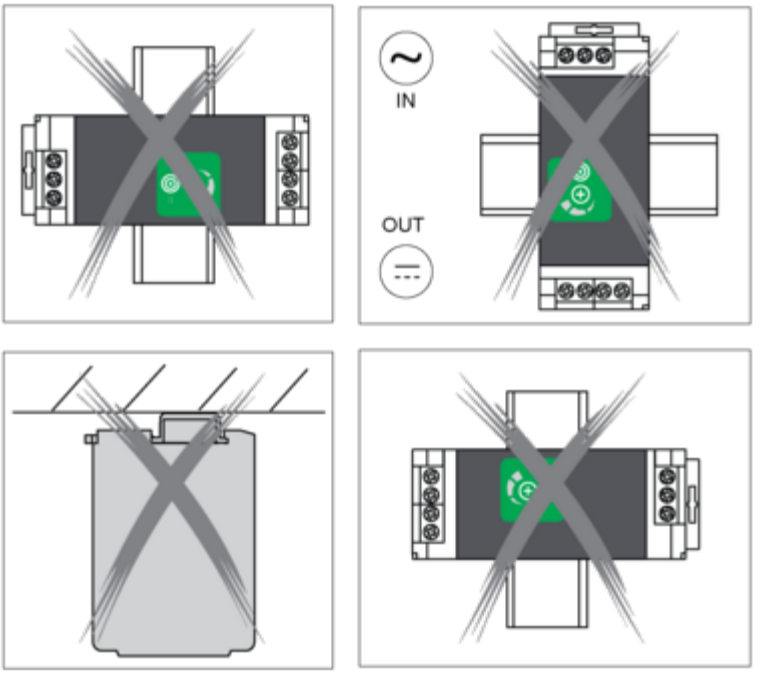
IN
OUT

Performance Curves

Performance Curve

Mounting Position A

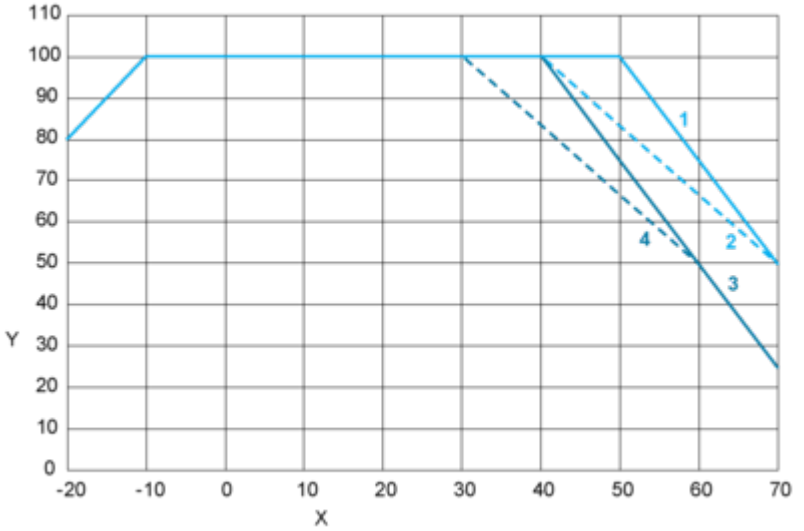

Mounting Position B

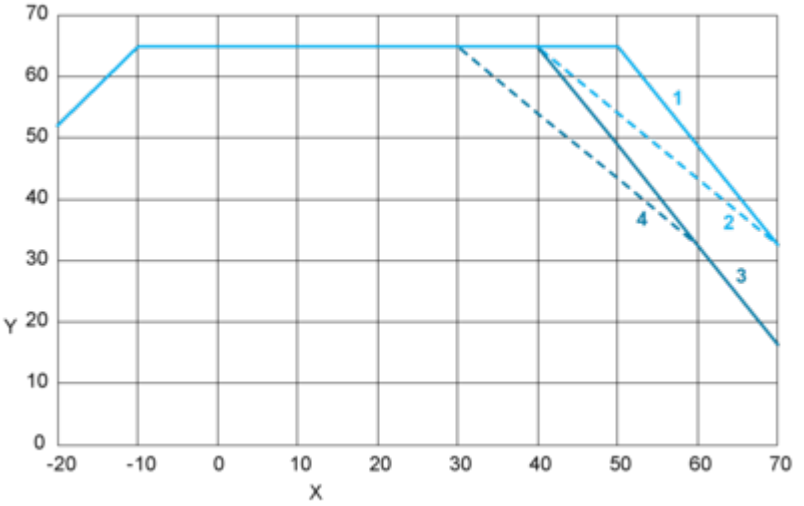

X : Surrounding Air Temperature (°C)
Y : Percentage of Maximum Load (%)
1 : Altitude ≤ 2000 m (6561 ft), Input voltage = 230 VAC / 325 VDC
2 : Altitude ≤ 2000 m (6561 ft), 115 VAC / 162 VDC
3 : Altitude ≤ 5000 m (16404 ft), Input voltage = 230 VAC / 325 VDC
4 : Altitude ≤ 5000 m (16404 ft), 115 VAC / 162 VDC

Image of product / Alternate images

Alternative