Product data sheet

Specifications

Protective rear cover, Harmony XAP, for plastron XAPE301, insulated material, without opening, IP 65

XAPE901

Product availability: Non-Stock - Not normally stocked in distribution facility

Main

Range of Product	Harmony XAP
Product or Component Type	Protective rear cover
Device short name	XAPE
Product destination	For front plate XAPE301
Material	Insulated material
Cable entry	Knock-out cable entries
Product mounting	Flush mounting
IP degree of protection	IP65 IEC 60529 IP657 NF C 20-010
Resistance to chemical agents	Good resistant to acetone Good resistant to alcohols Good resistant to chloride and fluoride solvents Good resistant to diluted mineral acids Good resistant to oils and petrol Good resistant to organic acids Good resistant to salts

Complementary

Net Weight	0.09 lb(US) (0.04 kg)

Environment

Protective treatment	TC TH
Ambient Air Temperature for Storage	-40…158 °F (-40…70 °C)
Ambient air temperature for operation	-13…158 °F (-25…70 °C)
Electrical shock protection class	Class I conforming to IEC 60536 Class I conforming to NF C 20-030

Ordering and shipping details

Category	US10CS222475
Discount Schedule	0CS2
GTIN	3389110628104
Returnability	Yes
Country of origin	FR

Price is “List Price” and may be subject to a trade discount – check with your local distributor or retailer for actual price.

Disclaimer: This documentation is not intended as a substitute for and is not to be used for determining suitability or reliability of these products for specific user applications

Packing Units

Unit Type of Package 1	PCE
Nbr. of units in pkg.	1
Package 1 Height	3.150 in (8.000 cm)
Package 1 Width	2.047 in (5.200 cm)
Package 1 Length	2.362 in (6.000 cm)
Package weight(Lbs)	1.376 oz (39.000 g)
Unit Type of Package 2	S02
Number of Units in Package 2	36
Package 2 Height	5.906 in (15.000 cm)
Package 2 Width	11.811 in (30.000 cm)
Package 2 Length	15.748 in (40.000 cm)
Package 2 Weight	3.924 lb(US) (1.780 kg)

Contractual warranty

Warranty	18 months

Environmental Data

Schneider Electric aims to achieve Net Zero status by 2050 through supply chain partnerships, lower impact materials, and circularity via our ongoing “Use Better, Use Longer, Use Again” campaign to extend product lifetimes and recyclability.

Environmental Data explained >

How we assess product sustainability >

Environmental footprint

Carbon footprint (kg CO2 eq, Total Life cycle)	1
Environmental Disclosure	Product Environmental Profile

Use Better

Materials and Substances

Packaging made with recycled cardboard	Yes
Packaging without single use plastic	No
EU RoHS Directive	Pro-active compliance (Product out of EU RoHS legal scope)
REACh Regulation	REACh Declaration
California proposition 65	WARNING: This product can expose you to chemicals including: Di-isodecyl phthalate (DIDP), which is known to the State of California to cause birth defects or other reproductive harm. For more information go to www.P65Warnings.ca.gov

Use Again

Repack and remanufacture

Circularity Profile	No need of specific recycling operations
Take-back	No

Dimensions Drawings

Dimensions and Mounting

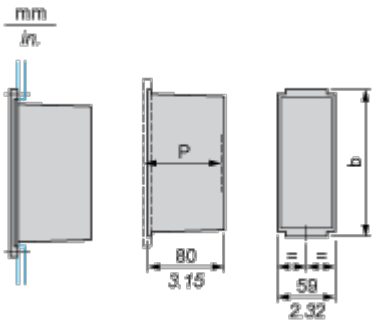

P Usable depth

b		P	
mm	in.	mm	in.
52	2.05	82.5	3.25

Technical Illustration
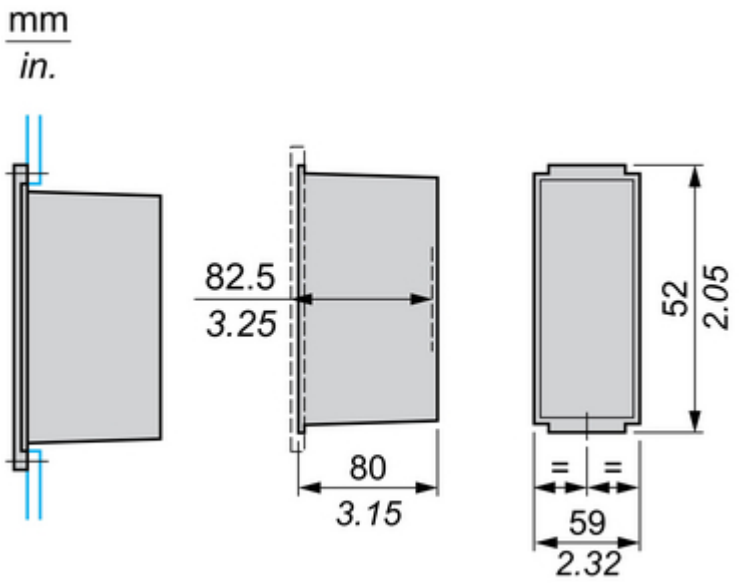
Dimensions