Product data sheet

Specifications

Light Module, Harmony XVB7 Modular Tower Light, White, Ø70mm, Blinking, Colored Lens

XVB7C57

Product availability: Stock - Normally stocked in distribution facility

Main

Range of Product	Harmony XVB7
Product or Component Type	Light module
Device Composition	Standard lens
Device short name	XVB7
Mounting diameter	2.8 in (70 mm)
Signalling type	Blinking
Light color	LED, white
Material	PC (polycarbonate)
Net Weight	0.231 lb(US) (0.105 kg)
Mounting position	Upright/inverted

Complementary

Blinking frequency	1 Hz
Service life in hours	50000 h
[Ue] rated operational voltage	24 V AC/DC
Rated operational voltage limits	21.6...26.4 V AC/DC
Current consumption	40 mA 24 V AC 45 mA 24 V DC
Inrush current	0.5 A
Electrical shock protection class	Class II
[Ui] Rated Insulation Voltage	50 V
[Uimp] rated impulse withstand voltage	0.5 kV

Environment

Pollution degree	2
Ambient Air Temperature for Operation	-13…140 °F (-25…60 °C)
Ambient Air Temperature for Storage	-40…158 °F (-40…70 °C)
IP Degree of Protection	IP66
Environmental Type ratings	Type 4/4X/12/13 indoor use only
Vibration resistance	6 gn +/- 0.5 mm 10…500 Hz)in operation
Shock resistance	30 gn 6 ms) in operation

Price is “List Price” and may be subject to a trade discount – check with your local distributor or retailer for actual price.

Disclaimer: This documentation is not intended as a substitute for and is not to be used for determining suitability or reliability of these products for specific user applications

Standards	UL 60947-5-1 IEC 60947-5-1 CSA C22.2 No 60947-5-1
Product Certifications	cULus CCC RCM UKCA CE

Ordering and shipping details

Category	US10CS222612
Discount Schedule	0CS2
GTIN	3606487129394
Returnability	Yes
Country of origin	DE

Packing Units

Unit Type of Package 1	PCE
Nbr. of units in pkg.	1
Package 1 Height	2.559 in (6.500 cm)
Package 1 Width	2.874 in (7.300 cm)
Package 1 Length	2.953 in (7.500 cm)
Package weight(Lbs)	3.704 oz (105.000 g)
Unit Type of Package 2	S02
Number of Units in Package 2	30
Package 2 Height	5.9 in (15 cm)
Package 2 Width	11.8 in (30 cm)
Package 2 Length	15.7 in (40 cm)
Package 2 Weight	7.672 lb(US) (3.480 kg)

Contractual warranty

Warranty (in months)	18

Environmental Data

Schneider Electric aims to achieve Net Zero status by 2050 through supply chain partnerships, lower impact materials, and circularity via our ongoing “Use Better, Use Longer, Use Again” campaign to extend product lifetimes and recyclability.

Environmental Data explained >

How we assess product sustainability >

Environmental footprint

Carbon footprint (kg CO2 eq, Total Life cycle)	13
Environmental Disclosure	Product Environmental Profile

Use Better

Materials and Substances

Packaging made with recycled cardboard	Yes
Packaging without single use plastic	Yes
EU RoHS Directive	Compliant with Exemptions
REACh Regulation	REACh Declaration
California proposition 65	WARNING: This product can expose you to chemicals including: Lead and lead compounds, which is known to the State of California to cause cancer and birth defects or other reproductive harm. For more information go to www.P65Warnings.ca.gov

Use Again

Repack and remanufacture

Circularity Profile	End of Life Information
Take-back	No
WEEE Label	The product must be disposed on European Union markets following specific waste collection and never end up in rubbish bins.

Dimensions Drawings

Dimensions

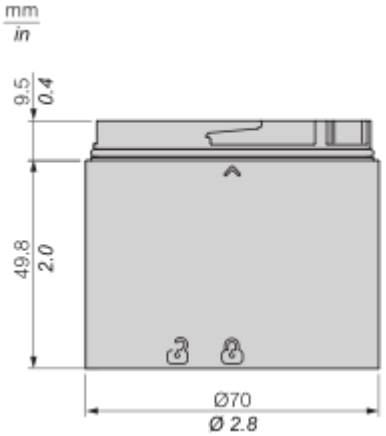

Mounting and Clearance

Mounting Overview

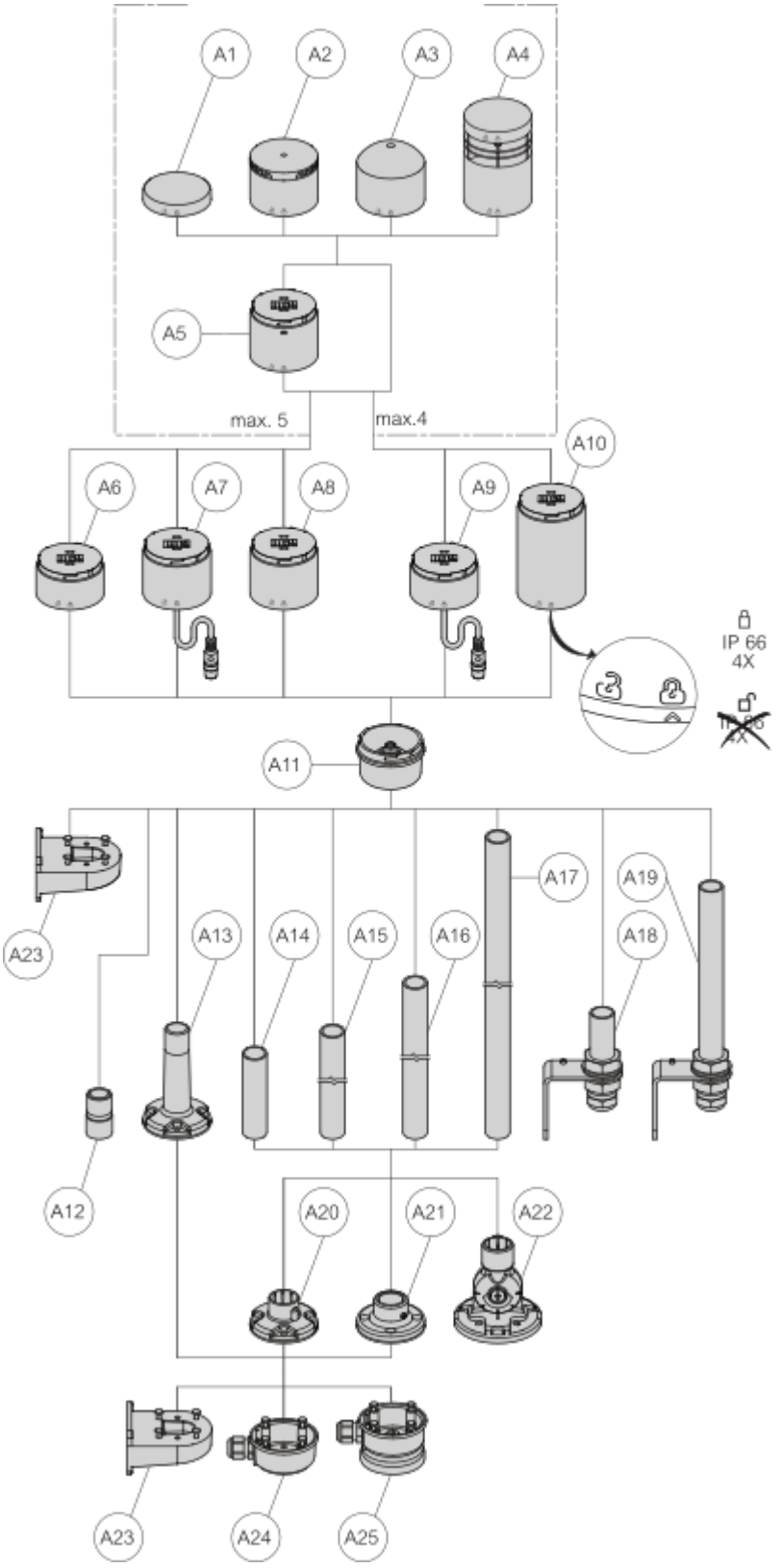

Drawing	Part Number	Part Description

A1, A6, A11	XVB7C21B...	24V Base Direct / Tube & Cover
A1, A7, A11	XVB7C31	IO Link Base Direct / Tube & Cover
A1, A8, A11	XVB7C51	USB Base Direct / Tube & Cover
A1, A9, A11	XVB7C61	M12 Base Direct / Tube & Cover
A1, A10, A11	XVB7C21M...	AC Base Direct / Tube & Cover
A2	XVB7C9S...	2 Tones Buzzer
A2	XVB7C9T	8 Tones Buzzer
A2	XVB7C9SS	Self-Adjust Sounder 1 Tone
A3	XVB7L2...	Beacon Steady Lens
	XVB7L6...	Beacon Flashing Lens
A4	XVB7C9V	Editable Voice Alarm
A5	XVB7C2...	Steady Lens
	XVB7C5...	Blinking Lens
	XVB7C6...	Flashing Lens
	XVB7CR...	Rotating Lens
	XVB7CM9	Multi-function Clear lens
A12	XVZ00	1/2" NPT Adapter
A13	XVZ02...	Plastic Fixing Plate With Pole
A14	XVZ100	Alu Ø25mm Pole 100mm Length
A15	XVZ250	Alu Ø25mm Pole 250mm Length
A16	XVZ400	Alu Ø25mm Pole 400mm Length
A17	XVZ800	Alu Ø25mm Pole 800mm Length
A18	XVZ100T	L Bracket Alu Ø25mm Pole 100mm
A19	XVZ250T	L Bracket Alu Ø25mm Pole 250mm
A20	XVZ01...	Plastic Fixing Plate
A21	XVZ11	Metal Fixing Plate
A22	XVZ06...	Plastic Foldable Bracket
A23	XVZ09	Plastic Wall Mount Bracket

A24	XVZ07	Side Entry Adapter
A25	XVZ08	Magnetic Adapter

Technical Illustration

Dimensions

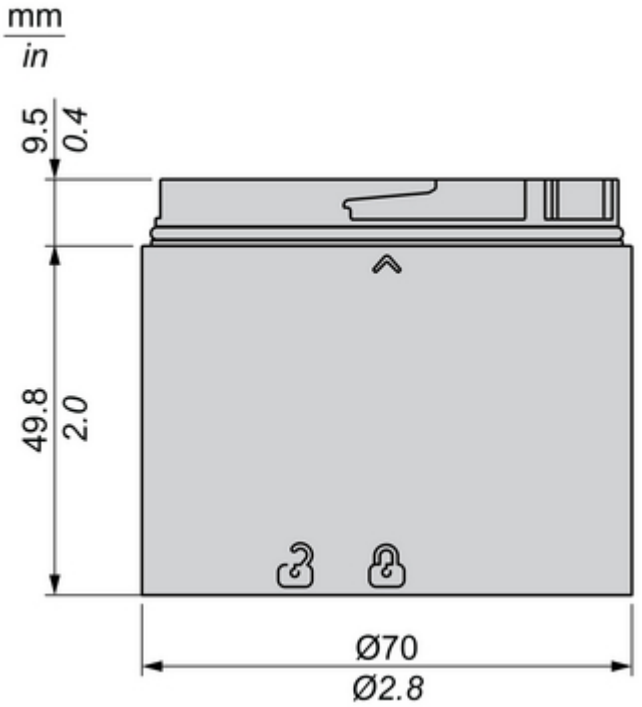

Offer Marketing Illustration

Product benefits / Features

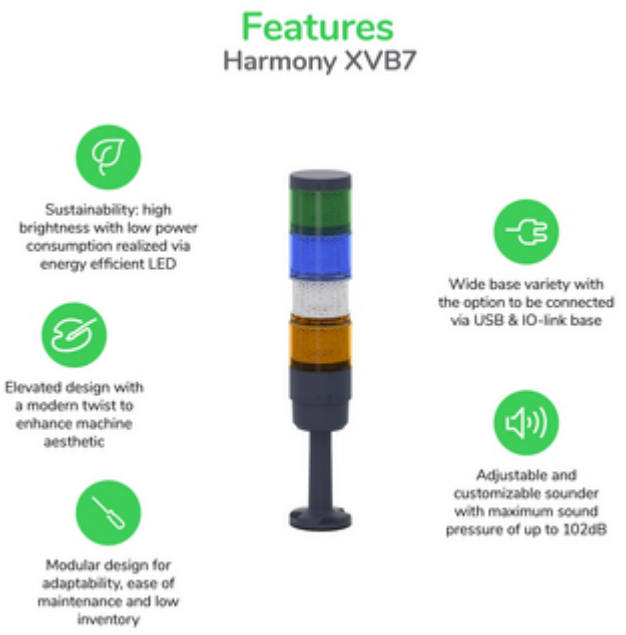

Offer Marketing Illustration

Product benefits / Features

Image of product / Alternate images

Alternative

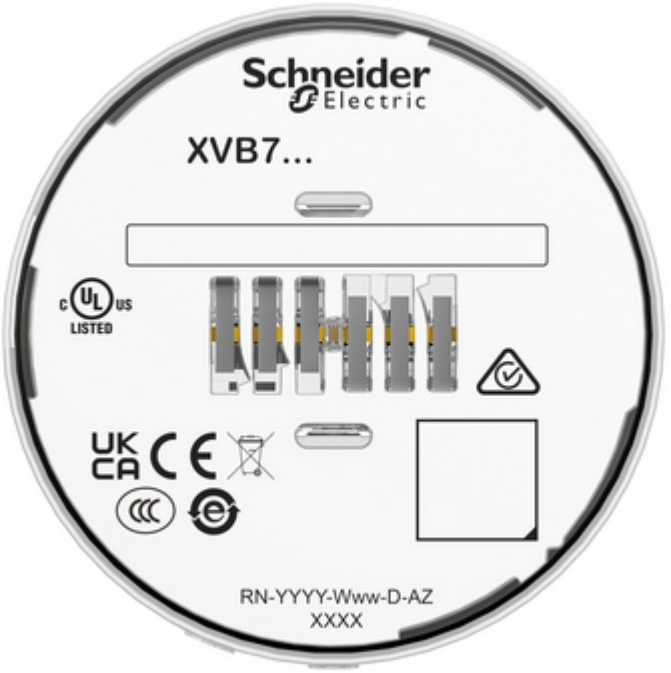

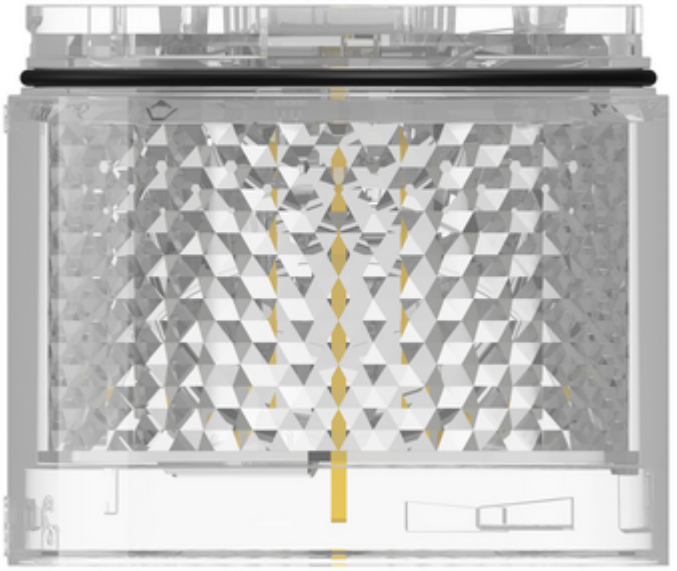

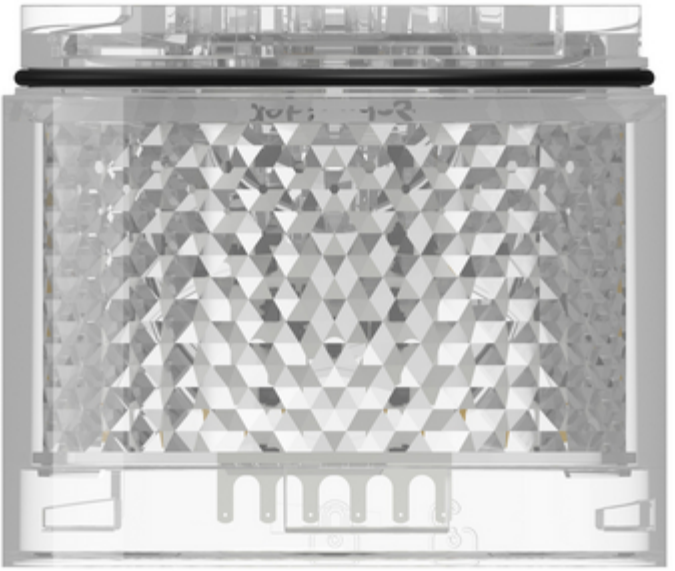

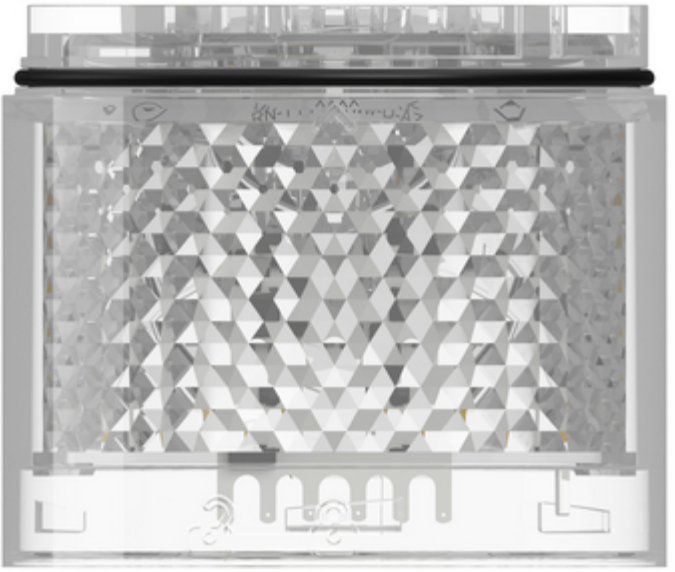

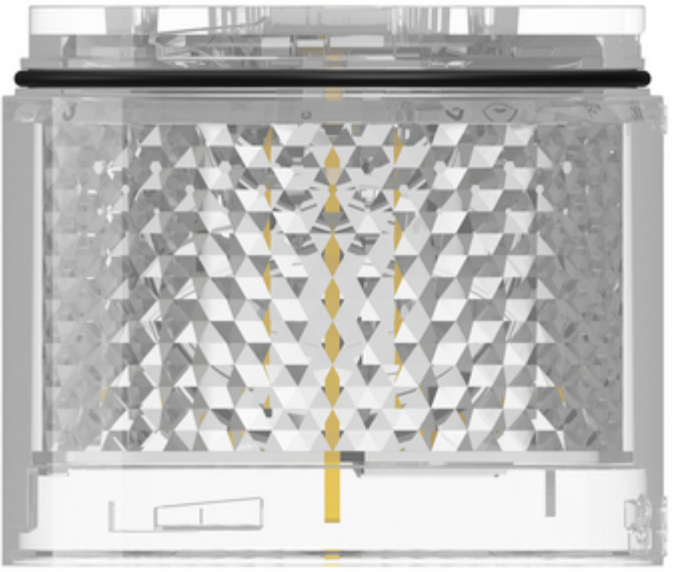

Image of product in real life situation