Product data sheet

Specifications

5â€ 7 color touch controller panel - Dig 8 inputs/8 outputs +Ana 4 In/2 Out

HMISCU8B5

Product availability: Stock - Normally stocked in distribution facility

Main

Range of Product	Harmony SCU
Product or Component Type	Small touch HMI controller
Display size	5.7 inch
Display type	Backlit LED colour TFT LCD
Touch panel	Analogue
Device presentation	Complete product

Complementary

Display Resolution	320 x 240 pixels QVGA
Backlight lifespan	50000 hours 65000 colours
Brightness	16 levels via touch panel
View angle horiz x vert	60° left 60° right 40° top 60° bottom
Character font	Chinese (simplified Chinese) Japanese (ANK, Kanji) ASCII Korean Taiwanese (traditional Chinese)
Supply	External source
[Us] rated supply voltage	24 V 20.4…28.8 V)DC
Immunity to microbreaks	10 ms
Inrush current	30 A
Power Consumption in W	24 W
Local signalling	No indicator
Number of pages	Limited by internal memory capacity
Operating System	Harmony
Processor name	CPU RISC
Memory description	Flash NAND, 128 MB Internal data storage FRAM, 128 kB Application run DRAM, 128 MB
Integrated connection type	1 serial link - RJ45 - RS232/RS485 <= 115.2 kbits/s) 1 Ethernet TCP/IP - RJ45 1 USB 2.0 type mini B 1 USB 2.0 type A CANopen master bus - SUB-D 9

Price is “List Price” and may be subject to a trade discount – check with your local distributor or retailer for actual price.

Disclaimer: This documentation is not intended as a substitute for and is not to be used for determining suitability or reliability of these products for specific user applications

Realtime clock	Built-in
Downloadable protocols	Modbus Modbus TCP/IP CANopen
Fixing mode	By 1 nut Ø 22 mm 1...6 mm thick panel
Enclosure Material	PC/PBT and PAA
Shock resistance	147 m/s² 11 ms on DIN rail)IEC 60068-2-27 294 m/s² 6 ms on panel mounting)IEC 60068-2-27
Vibration resistance	+/- 3.5 mm 5…9 Hz) IEC 60068-2-6 1 gn 9…150 Hz) IEC 60068-2-6
Electromagnetic compatibility	Electrostatic discharge immunity test - test level: 8 kV (air discharge) conforming to IEC 61000-4-2 Electrostatic discharge immunity test - test level: 6 kV (contact discharge) conforming to IEC 61000-4-2 Susceptibility to electromagnetic fields - test level: 10 V/m (80 MHz...3 GHz) conforming to IEC 61000-4-3 Electrical fast transient/burst immunity test - test level: 2 kV (power lines) conforming to IEC 61000-4-4 Electrical fast transient/burst immunity test - test level: 1 kV (between analogue I/O and operating voltage) conforming to IEC 61000-4-4 Electrical fast transient/burst immunity test - test level: 2 kV (relay wires) conforming to IEC 61000-4-4 Electrical fast transient/burst immunity test - test level: 1 kV (Ethernet line) conforming to IEC 61000-4-4 Electrical fast transient/burst immunity test - test level: 1 kV (COM line) conforming to IEC 61000-4-4 Electrical fast transient/burst immunity test - test level: 1 kV (CAN line) conforming to IEC 61000-4-4 Surge immunity test - test level: 2 kV (power supply (common mode)) conforming to IEC 61000-4-5 Surge immunity test - test level: 1 kV (power supply (differential mode)) conforming to IEC 61000-4-5 Surge immunity test - test level: 1 kV common mode (digital I/O) conforming to IEC 61000-4-5 Surge immunity test - test level: 0.5 kV differential mode (digital I/O) conforming to IEC 61000-4-5 Conducted RF disturbances - test level: 10 V (0.15...80 MHz) conforming to IEC 61000-4-6 Conducted emission - test level: 150 kHz...30 MHz conforming to EN 55011 Radiated emission - test level: 30 MHz...1 GHz conforming to EN 55011
Discrete input number	2 fast input (normal mode) IEC 61131-2 Type 1 6 digital input IEC 61131-2 Type 1
Discrete input voltage	24 V DC sink or source (positive/negative)
Number of common point	1 fast input (HSC mode) 1 digital input
Discrete input current	7.83 mA fast input 5 mA digital
Input impedance	4.7 kOhm 2.81 kOhm
Sensor power supply	15…28.8 V DC >= 15 V >= 5 mA <= 5 V <= 1.5 mA 15…28.8 V DC >= 15 V >= 2.5 mA <= 5 V <= 1 mA
Configurable filtering time	0 ms no filter none) 0.004...0.04 ms bounce filter latch/event and cumulative filter by step Nx0.5ms (64>=N>=2)) 3...12 ms integrator none/run/stop)
Maximum input frequency	100 kHz fast input (encoder mode) A/B 100 kHz fast input single phase 100 kHz fast input pulse/direction
Maximum cable distance between devices	Shielded cable <32.8 ft (10 m) fast input Shielded cable <328.08 ft (100 m) digital input Unshielded cable <164.04 ft (50 m) digital input
Connection pitch	0.1 in (3.5 mm)
Overvoltage protection	With

Isolation between channels and internal logic	500 V DC
Isolation between channels	None
Discrete output number	2 fast output (normal mode) source 6 digital output source
Discrete output voltage	24 V DC 19.2...28.8 V)transistor 24 V DC 5...30 V)relay 220 V AC 100...250 V)relay
Input/output number	2 fast input FI0...FI1 2 fast output FQ0...FQ1 6 digital input DI0...DI5 6 digital output DQ0...DQ5
Discrete output current	2 A 4 A)5 ms opening contact digital output 2 A 4 A)2 ms closing contact digital output 300 mA2 ms fast output (normal mode) 50 mA2 ms fast output (PWM or PTO mode)
Insulation resistance	> 10 MOhm between the I/O and internal logic > 10 MOhm between power supply and earth
Maximum output frequency	100 kHz fast output (PTO mode) 1 kHz fast output (PWM mode)
Absolute accuracy error	+/- 0.1 % of full scale cyclic ratio 1...99% fast output (PWM or PTO mode) 1 % of full scale cyclic ratio 1...99% fast output (PWM or PTO mode) +/- 5 % of full scale cyclic ratio 10...90% fast output (PWM or PTO mode) +/- 10 % of full scale cyclic ratio 20...80% fast output (PWM or PTO mode) +/- 15 % of full scale cyclic ratio 30...70% fast output (PWM or PTO mode)
Analogue input number	2 analog input 2 RTDs
Analogue input range	0...20 mA/4...20 mA 12 bits 250 Ohm +/- 1 %) -10...+10 V or 0...10 V 12 bits + sign >= 1 MOhm
Analogue input type	RTD - 200...600 °C 16 bitsPt 100/Pt 1000 RTD - 50...200 °C 16 bitsNi 100/Ni 1000 RTD - 200...760 °C 16 bits thermocouple J) RTD - 240...1370 °C 16 bits thermocouple K) RTD 0...1600 °C 16 bits thermocouple R) RTD 200...1800 °C 16 bits thermocouple B) RTD 0...1600 °C 16 bits thermocouple S) RTD - 200...400 °C 16 bits thermocouple T) RTD - 200...900 °C 16 bits thermocouple E) RTD - 200...1300 °C 16 bits thermocouple N)
Analogue output number	2 resistive load 12 bits + sign
Analogue output range	0...20 mA/4...20 mA > 300 Ohm)open-circuit -10...10 V/0...10 V > 2 kOhm)short-circuit
Height	5.09 in (129.4 mm)
Width	6.4 in (163 mm)
Depth	3.0008 in (76.22 mm)
Net Weight	1.770 lb(US) (0.803 kg)

Environment

Standards	FCC Class A EN 61131-2 UL 508 IEC 61000-6-2 CSA C22.2 No 213 Class I Division 2 ANSI/ISA 12-12-01

Product Certifications	cULus 508 cULus CSA 22-2 No 142 GOST cUL 1604 Class 1 Division 2 C-tick KCC UKCA UKEX
Marking	CE
Ambient air temperature for operation	32…122 °F (0…50 °C)
Ambient Air Temperature for Storage	-4…140 °F (-20…60 °C)
Relative humidity	5…85 % without condensation
Operating altitude	<= 6561.68 ft (2000 m)
Storage altitude	0…32808.4 ft (0…10000 m)
Maximum pressure	800...1114 hPa
IP degree of protection	IP20 IEC 60529 rear panel) IP65 IEC 60529 front panel)
NEMA degree of protection	NEMA 4X front panel
Pollution degree	2 IEC 60664
Environmental characteristic	Corrosive gas free

Ordering and shipping details

Category	US10MC222568
Discount Schedule	0MC2
GTIN	3595864175584
Returnability	Yes
Country of origin	ID

Packing Units

Unit Type of Package 1	PCE
Nbr. of units in pkg.	1
Package 1 Height	4.724 in (12.000 cm)
Package 1 Width	7.480 in (19.000 cm)
Package 1 Length	10.630 in (27.000 cm)
Package weight(Lbs)	3.296 lb(US) (1.495 kg)
Unit Type of Package 2	S03
Number of Units in Package 2	4
Package 2 Height	11.811 in (30.000 cm)
Package 2 Width	11.811 in (30.000 cm)
Package 2 Length	15.748 in (40.000 cm)
Package 2 Weight	14.925 lb(US) (6.770 kg)

Environmental Data

Schneider Electric aims to achieve Net Zero status by 2050 through supply chain partnerships, lower impact materials, and circularity via our ongoing “Use Better, Use Longer, Use Again” campaign to extend product lifetimes and recyclability.

Environmental Data explained >

How we assess product sustainability >

Environmental footprint

Carbon footprint (kg CO2 eq, Total Life cycle)	642
Environmental Disclosure	Product Environmental Profile

Use Better

Materials and Substances

F-gas usage performance	Only air and vacuum used for insulation / breaking, no F-gas including SF6
Packaging made with recycled cardboard	Yes
Packaging without single use plastic	No
EU RoHS Directive	Pro-active compliance (Product out of EU RoHS legal scope)
SCIP Number	0fd86373-eda5-4dea-806b-9b9833dc484c
REACh Regulation	REACh Declaration
California proposition 65	WARNING: This product can expose you to chemicals including: Lead and lead compounds, which is known to the State of California to cause cancer and birth defects or other reproductive harm. For more information go to www.P65Warnings.ca.gov
Halogen content performance	Product contains halogen above thresholds
PVC free	No
Silicon free	No

Use Again

Repack and remanufacture

Circularity Profile	End of Life Information
Removable battery	User replaceable
Take-back	No
WEEE Label	The product must be disposed on European Union markets following specific waste collection and never end up in rubbish bins.

Dimensions Drawings

Dimensions

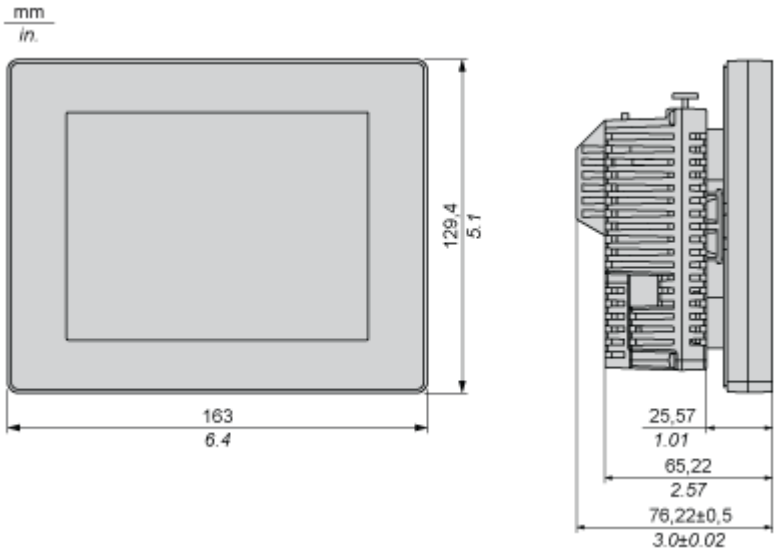

Mounting and Clearance

Recommended Mounting position

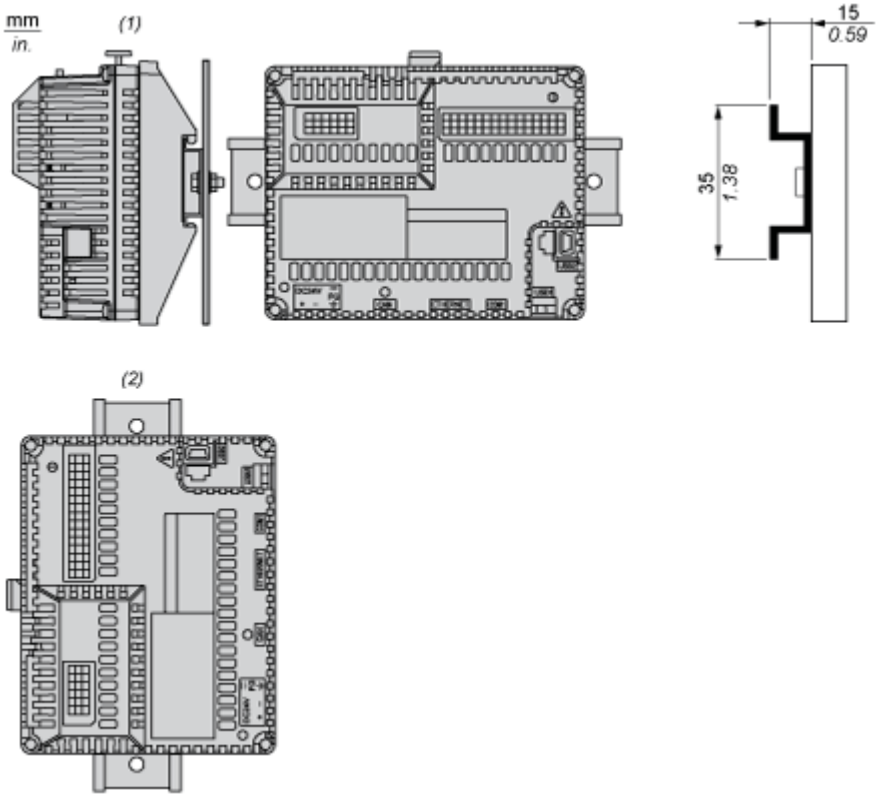

(1) Horizontal mounting

(2) Vertical mounting

No Recommended Mounting Position

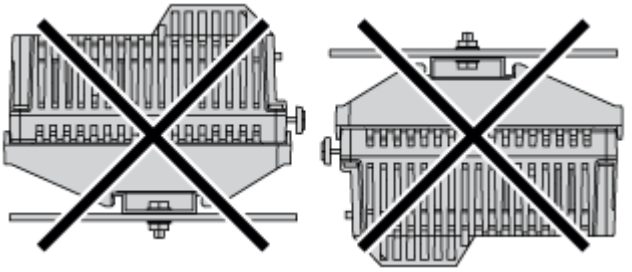

Clearance

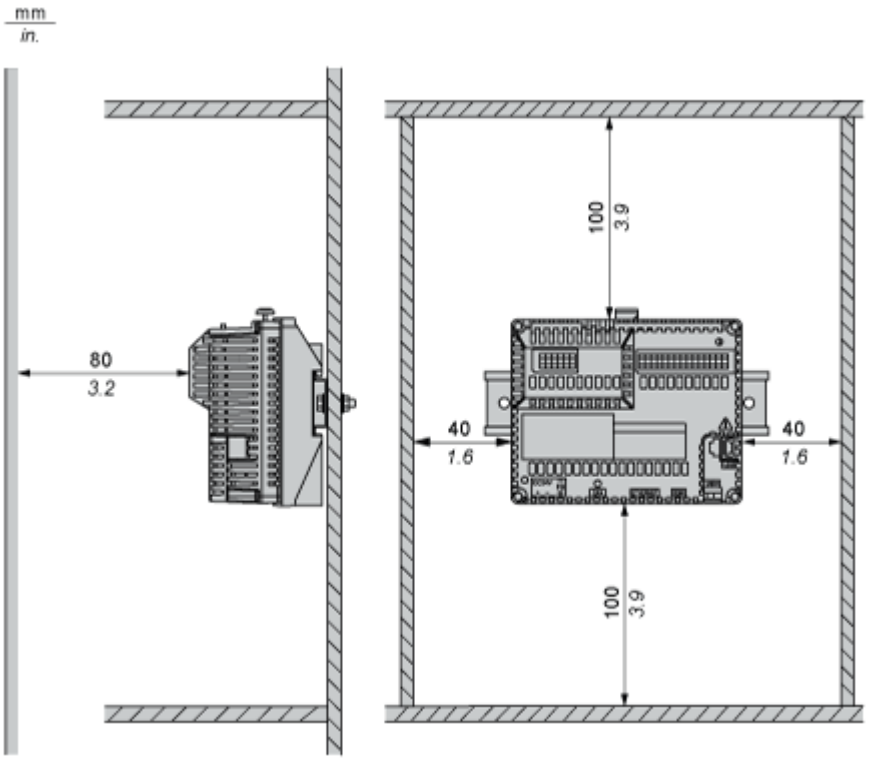

Keep adequate spacing for proper ventilation to maintain an ambient temperature between 0...50 °C (32...122 °F) for horizontal installation and 0...40 °C (32...104 °F) for vertical installation.

Connections and Schema

Wiring Diagram

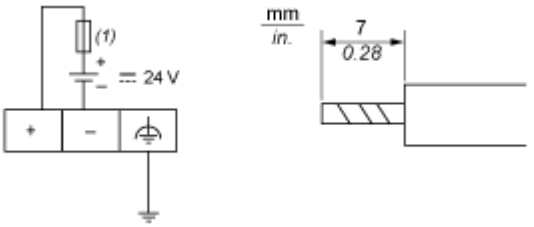

(1) Slow-blow 2A type T fuse

Wiring Diagram of the Analog Inputs and Analog Outputs

Voltage for Analog Inputs

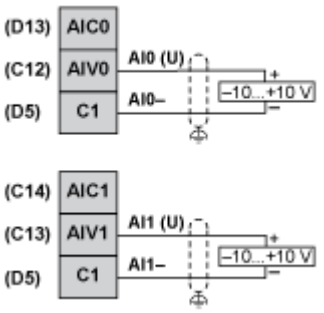

Current for Analog Inputs

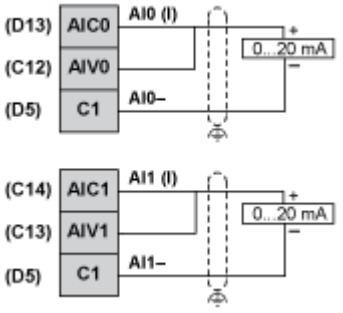

Voltage and Current for Analog Outputs

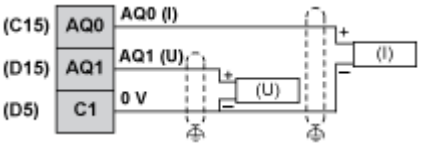

3 Wiring for Analog Inputs PT100

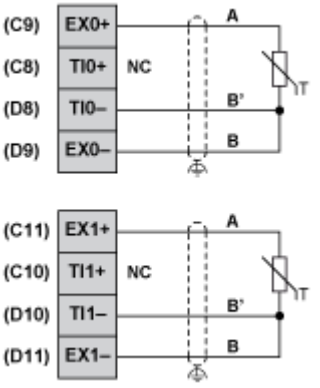

2 Wiring for Analog Inputs PT100

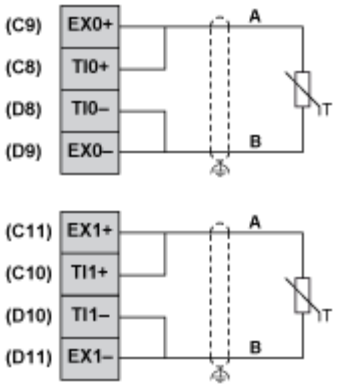

Thermocouple

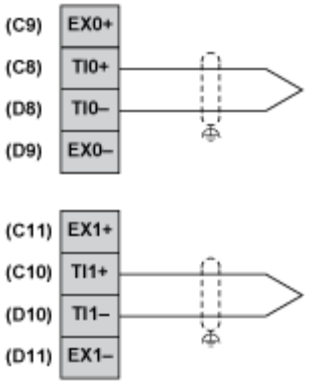

Wiring Diagram of Digital Inputs

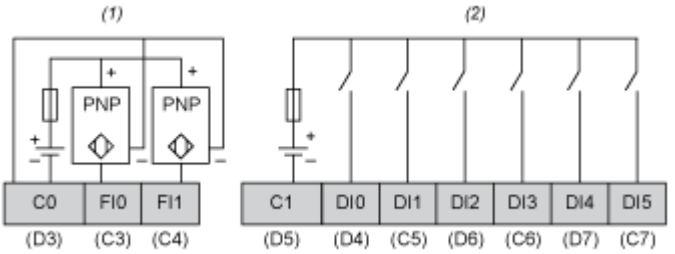

(1) HSC inputs with pin assignment of terminal blocks C,D.

(2) Digital inputs with pin assignment of terminal blocks C,D.

Wiring Diagram of Digital Outputs

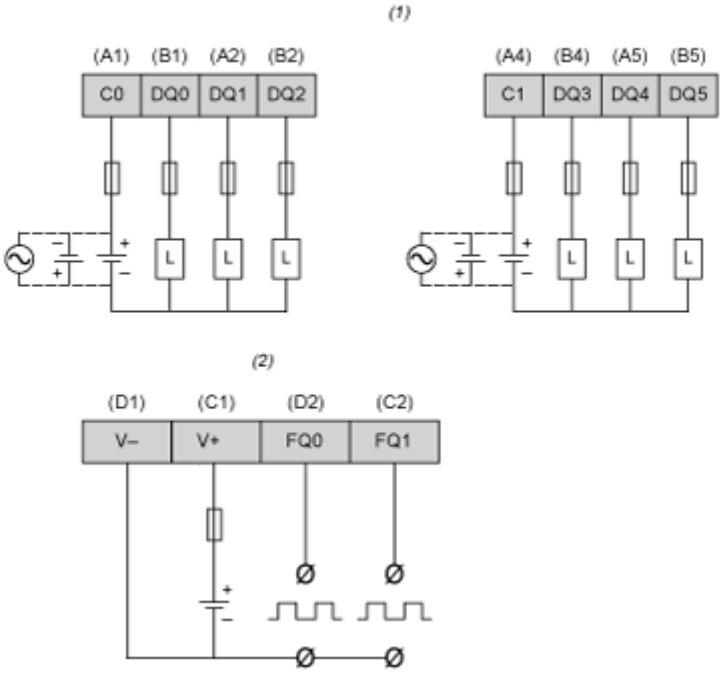

(1) Digital outputs with pin assignment of terminal blocks A,B.

(2) PWM outputs with pin assignment of terminal blocks C,D.

Image of product / Alternate images

Alternative