Product data sheet

Specifications

frequency control relay, Harmony Control Relays, 5A, 1CO+1CO, 120...277V AC

RM35HZ21FM

Product availability: Non-Stock - Not normally stocked in distribution facility

Main

Range of Product	Harmony Control Relays
Relay Type	Frequency control relays
Product or Component Type	Frequency control relay
Relay name	RM35HZ21FM
Relay monitored parameters	Overfrequency and underfrequency 50 or 60 Hz
Time delay type	Adjustable 0.1...10 s, +/- 10 % Tt- time delay upon fault
Switching capacity in VA	1250 VA
Minimum switching current	10 mA 5 V DC
Maximum power consumption in VA	6 VA AC
Measurement range	40...70 Hz
Utilisation category	AC-12 IEC 60947-5-1 AC-13 IEC 60947-5-1 AC-14 IEC 60947-5-1 AC-15 IEC 60947-5-1 DC-12 IEC 60947-5-1 DC-13 IEC 60947-5-1 DC-14 IEC 60947-5-1

Complementary

Reset time	2000 ms time delay
Maximum switching voltage	250 V AC/DC
[Us] rated supply voltage	120...277 V AC
[Un] rated nominal voltage	120...277 V AC, non self-powered
Supply voltage limits	102…308 V AC
Control circuit frequency	40...70 Hz
Width	1.4 in (35 mm)
Output contacts	1 C/O + 1 C/O
Contacts material	Cadmium free
Nominal output current	5 A
maximum input frequency	70 Hz
Maximum measuring cycle	200 ms measurement cycle as true rms value
delay at power up	0.5 s
Hysteresis	0.3 % fixed

Price is “List Price” and may be subject to a trade discount – check with your local distributor or retailer for actual price.

Disclaimer: This documentation is not intended as a substitute for and is not to be used for determining suitability or reliability of these products for specific user applications

Measurement accuracy	+/- 10 % of the full scale value in input +/- 10 % of the full scale value in time delay
Repeat accuracy	+/- 0.5 % input and measurement circuit +/- 0.5 % time delay
Measurement error	+/- 0.05 %/°C with temperature variation < +/- 1 % over the whole range with voltage variation
Threshold setting	-2...10 Hz -10...2 Hz
Marking	CE : 73/23/EEC CE : EMC 89/336/EEC
Overvoltage category	III conforming to IEC 60664-1
Insulation resistance	> 500 MOhm 500 V DC between supply and relay output IEC 60255-5 > 500 MOhm 500 V DC between measurement and relay output IEC 60664-1 > 1 MOhm 500 V DC between supply and measurement IEC 60255-5 > 500 MOhm 500 V DC between supply and relay output IEC 60664-1 > 500 MOhm 500 V DC between measurement and relay output IEC 60255-5 > 1 MOhm 500 V DC between supply and measurement IEC 60664-1
[Ui] rated insulation voltage	400 V IEC 60664-1
operating voltage tolerance	- 15 % + 10 % Un
Supply frequency	50/60 Hz +/- 10 %
Insulation	No galvanic insulation between supply and measurement
Operating position	Any position without derating
Connections - terminals	Screw terminals, 1 x 0.5...1 x 4 mm² AWG 20...AWG 11) solid without cable end Screw terminals, 2 x 0.5...2 x 2.5 mm² AWG 20...AWG 14) solid without cable end Screw terminals, 1 x 0.2...1 x 2.5 mm² AWG 24...AWG 12) flexible with cable end Screw terminals, 2 x 0.2...2 x 1.5 mm² AWG 24...AWG 16) flexible with cable end
Tightening torque	5.3…8.9 lbf.in (0.6…1 N.m) IEC 60947-1
Housing material	Self-extinguishing plastic
local signalling	1 LED Green power ON 1 LED Yellow correct frequency (high R1) 1 LED Yellow correct frequency (low R2)
Mounting support	35 mm symmetrical DIN rail conforming to IEC 60715
Electrical durability	100000 cycles
Mechanical durability	30000000 cycles
Operating rate	<= 360 operations/hour full load
Control Type	Without test button

Environment

Immunity to microbreaks	10 ms
Electromagnetic compatibility	Emission standard for industrial environments IEC 61000-6-4 Emission standard for residential, commercial and light-industrial environments IEC 61000-6-3 Immunity for industrial environments NF EN/IEC 61000-6-2
Standards	IEC 60255-6 NF EN 60255-6
Product Certifications	GL UL CSA C-tick GOST
Ambient Air Temperature for Storage	-40…158 °F (-40…70 °C)
Ambient air temperature for operation	-4…122 °F (-20…50 °C)

Relative humidity	95 % 131 °F (55 °C) IEC 60068-2-30
Vibration resistance	0.35 mm (f= 5…57.6 Hz) conforming to IEC 60068-2-6/IEC 60255-21-1 1 gn (f= 57.6…150 Hz) conforming to IEC 60068-2-6/IEC 60255-21-1
Shock resistance	15 gn 11 ms IEC 60255-21-1
IP degree of protection	IP20 IEC 60529 terminals) IP30 IEC 60529 casing)
Pollution degree	3 IEC 60664-1
Dielectric test voltage	2 kV AC 50 Hz
Non-dissipating shock wave	4 kV

Ordering and shipping details

Category	US10CP222380
Discount Schedule	0CP2
GTIN	3389119405201
Returnability	Yes
Country of origin	ID

Packing Units

Unit Type of Package 1	PCE
Nbr. of units in pkg.	1
Package 1 Height	1.811 in (4.600 cm)
Package 1 Width	3.150 in (8.000 cm)
Package 1 Length	3.819 in (9.700 cm)
Package weight(Lbs)	4.444 oz (126.000 g)
Unit Type of Package 2	S03
Number of Units in Package 2	48
Package 2 Height	11.811 in (30.000 cm)
Package 2 Width	11.811 in (30.000 cm)
Package 2 Length	15.748 in (40.000 cm)
Package 2 Weight	15.075 lb(US) (6.838 kg)

Contractual warranty

Warranty	18 months

Environmental Data

Schneider Electric aims to achieve Net Zero status by 2050 through supply chain partnerships, lower impact materials, and circularity via our ongoing “Use Better, Use Longer, Use Again” campaign to extend product lifetimes and recyclability.

Environmental Data explained >

How we assess product sustainability >

Environmental footprint

Carbon footprint (kg CO2 eq, Total Life cycle)	36
Environmental Disclosure	Product Environmental Profile

Use Better

Materials and Substances

Packaging made with recycled cardboard	Yes
Packaging without single use plastic	Yes
EU RoHS Directive	Pro-active compliance (Product out of EU RoHS legal scope)
REACh Regulation	REACh Declaration
California proposition 65	WARNING: This product can expose you to chemicals including: Lead and lead compounds, which is known to the State of California to cause cancer and birth defects or other reproductive harm. For more information go to www.P65Warnings.ca.gov

Use Again

Repack and remanufacture

Circularity Profile	End of Life Information
Take-back	No

Dimensions Drawings

Frequency Control Relay

Dimensions and Mounting

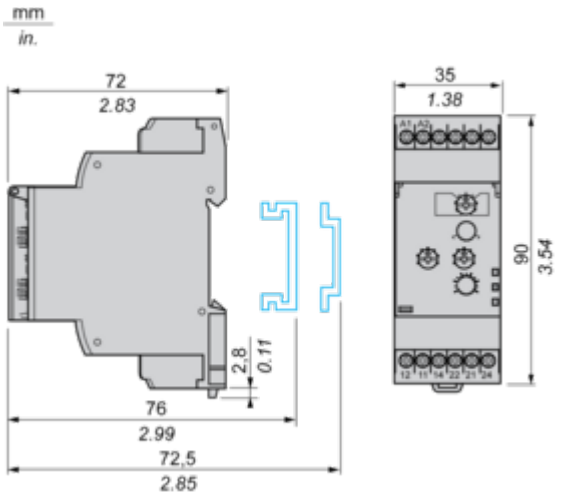

Connections and Schema

Frequency Control Relay

Wiring Diagram

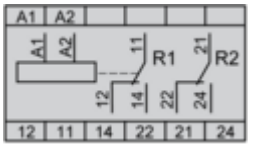

Technical Description

Function Diagrams

Over-Frequency and Under-Frequency Control on 50 Hz or 60 Hz Supplies

Without memory ("No Memory" mode)

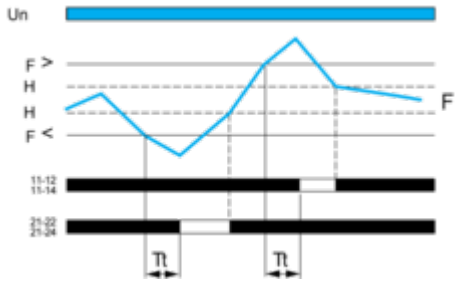

With memory ("Memory" mode)

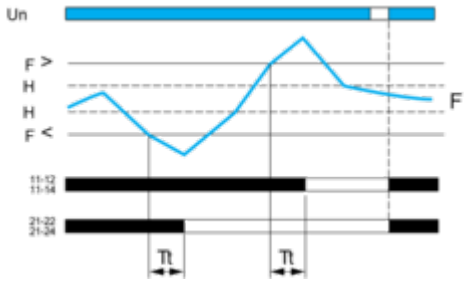

Legend

Tt Time delay after crossing of threshold from 0.1 s to 10 s
Un Supply voltage
F Monitored frequency
H Hysteresis
F> Over-frequency threshold
F< Under-frequency threshold
11-12, 11-14 R1 output relay connections
21-22, 21-24 R2 output relay connections
Relay status: black color = energized.

NOTE: In "Memory" mode, the relay opens after the time delay and stays in that position when crossing of the threshold is detected. The power supply voltage must be switched off to reset the product.

Technical Illustration

Dimensions

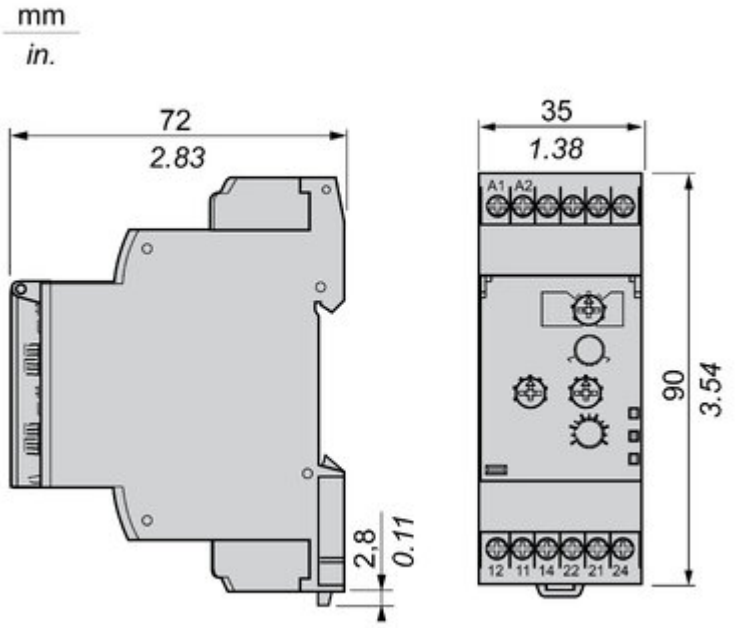

Offer Marketing Illustration

Product benefits / Features

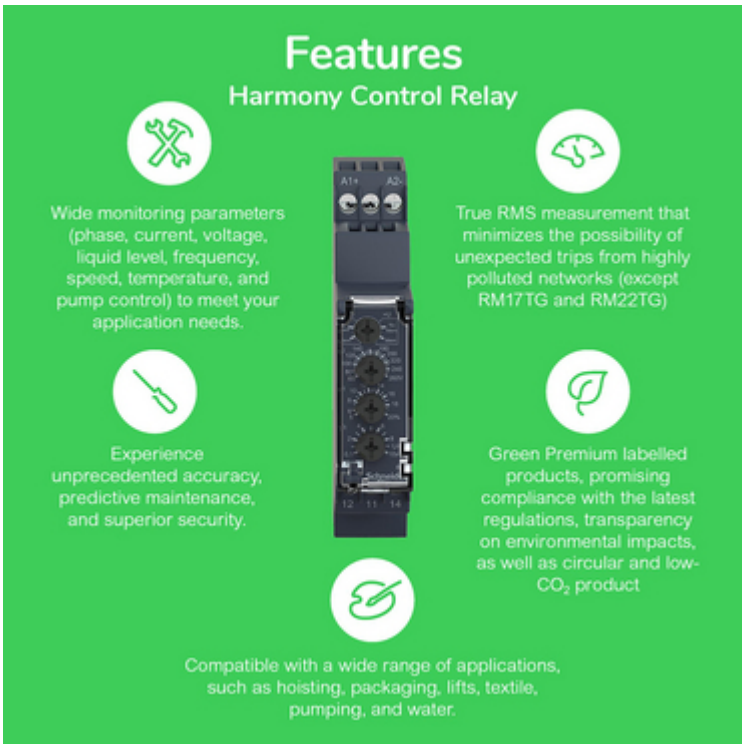

Offer Marketing Illustration

Product benefits / Features

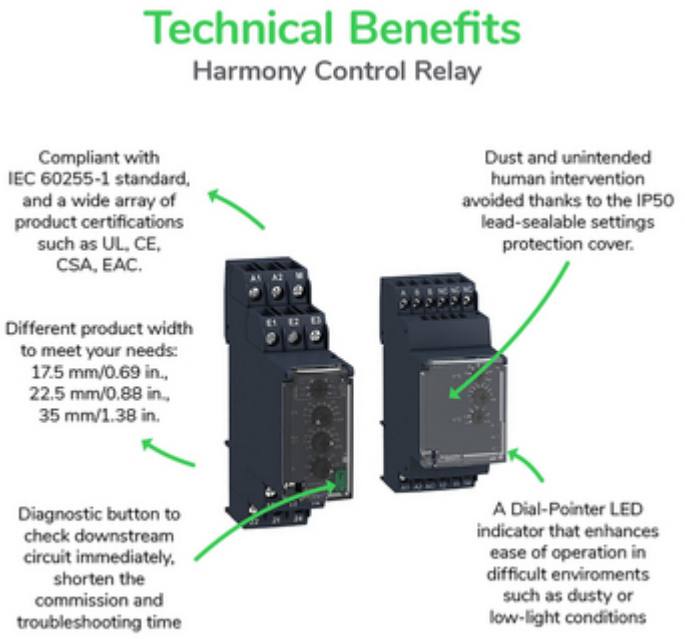

Image of product / Alternate images

Alternative

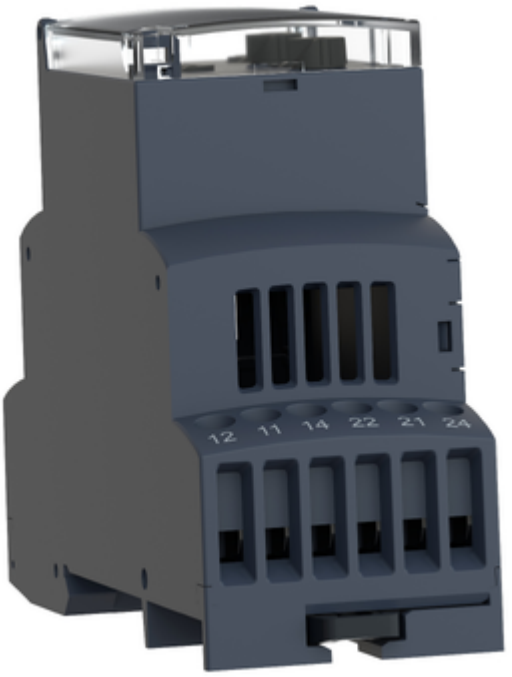

A1 A2 NC NC NC NC
50Hz
60Hz
x1
x2
Hz
Tt
Schneider
12 11 14 22 21 24

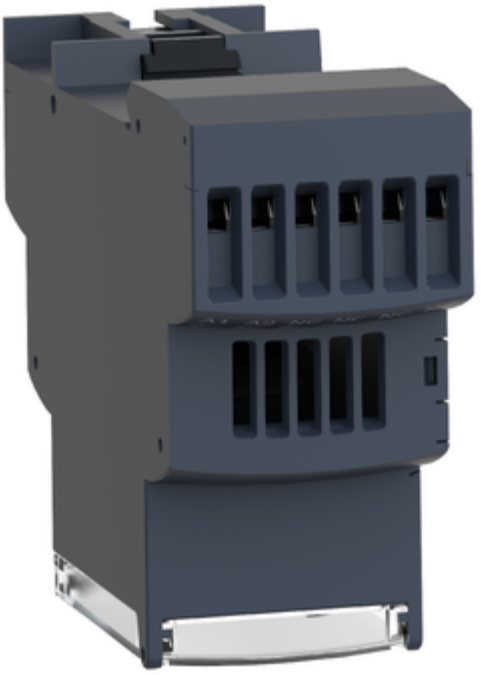

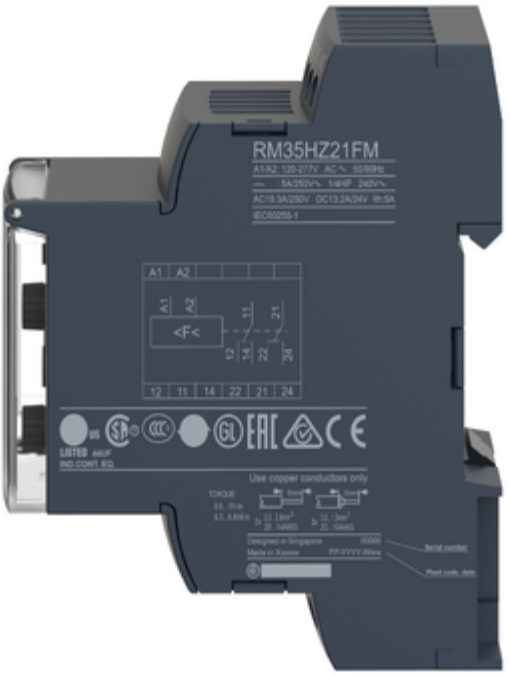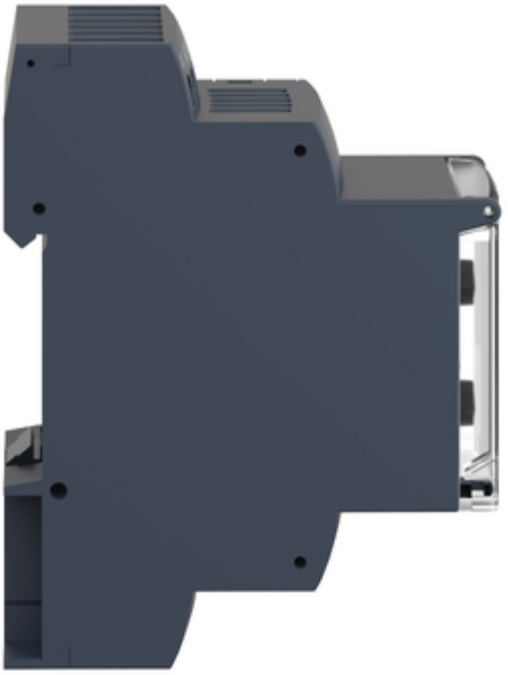
RM35HZ21FM
A1 A2
12 11 14 22 21 24
Use copper conductors only