# Product data sheet

Specifications

## Timing Relay, Type JCK, plug In, multifunction, programmable, 0.5 second to 999 hours, 10A, 240 VAC, 120 VAC/110 VDC

9050JCK70V20

**Product availability: Stock - Normally stocked in distribution facility**

## Main

| | |
|---|---|
| **product range** | 9050JCK |
| **product type** | Timer |
| **timing mode** | One shot falling edge<br>Repeat cycle<br>Trigger on-delay<br>Interval<br>Off-delay<br>Watchdog<br>One shot<br>On-delay<br>On-delay and off-delay |
| **timing range** | 1...999 h<br>0.05...9.99 s<br>1...999 s<br>0.1...99.9 s<br>0.1...99.9 h<br>1...999 min |
| **supply voltage** | 120 V AC |

## Complementary

| | |
|---|---|
| **power consumption** | 3 VA |
| **current rating** | 10 A |
| **switch function** | DPDT |
| **contact composition** | 2 NO + 2 NC |
| **contact material** | Silver nickel |
| **maximum switching voltage** | 240 V AC |
| **mounting type** | Socket |
| **number of pins** | 11 |
| **shape of pins** | Tubular |
| **for use with** | 8501NR61<br>8501NR62 |

## Environment

| | |
|---|---|
| **certifications** | CE<br>UL Recognized<br>UL Listed |
| **ambient temperature range - operational** | -18…150 °F (-28…66 °C) |
| **Height** | 2.4 in (60 mm) |

Price is “List Price” and may be subject to a trade discount – check with your local distributor or retailer for actual price.

Disclaimer: This documentation is not intended as a substitute for and is not to be used for determining suitability or reliability of these products for specific user applications

| | |
|---|---|
| **Width** | 1.7 in (44 mm) |
| **Depth** | 3.6 in (91 mm) |

## Ordering and shipping details

| | |
|---|---|
| **Category** | US10CP221652 |
| **Discount Schedule** | 0CP2 |
| **GTIN** | 785901053880 |
| **Returnability** | Yes |
| **Country of origin** | US |

## Packing Units

| | |
|---|---|
| **Unit Type of Package 1** | PCE |
| **Nbr. of units in pkg.** | 1 |
| **Package 1 Height** | 2.500 in (6.350 cm) |
| **Package 1 Width** | 2.000 in (5.080 cm) |
| **Package 1 Length** | 4.300 in (10.922 cm) |
| **Package weight(Lbs)** | 4.480 oz (127.006 g) |

## Contractual warranty

| | |
|---|---|
| **Warranty** | 18 months |

## Environmental Data

Schneider Electric aims to achieve Net Zero status by 2050 through supply chain partnerships, lower impact materials, and circularity via our ongoing “Use Better, Use Longer, Use Again” campaign to extend product lifetimes and recyclability.

Environmental Data explained

How we assess product sustainability

### Environmental footprint

| | |
|---|---|
| Carbon footprint (kg CO2 eq, Total Life cycle) | **50** |
| Environmental Disclosure | **Product Environmental Profile** |

## Use Better

### Materials and Substances

| | |
|---|---|
| Packaging made with recycled cardboard | **No** |
| Packaging without single use plastic | **No** |
| EU RoHS Directive | **Pro-active compliance (Product out of EU RoHS legal scope)** |
| REACh Regulation | **REACh Declaration** |

## Use Again

### Repack and remanufacture

| | |
|---|---|
| Circularity Profile | **End of Life Information** |
| Take-back | **No** |

Dimensions Drawings

## Approximate Dimensions

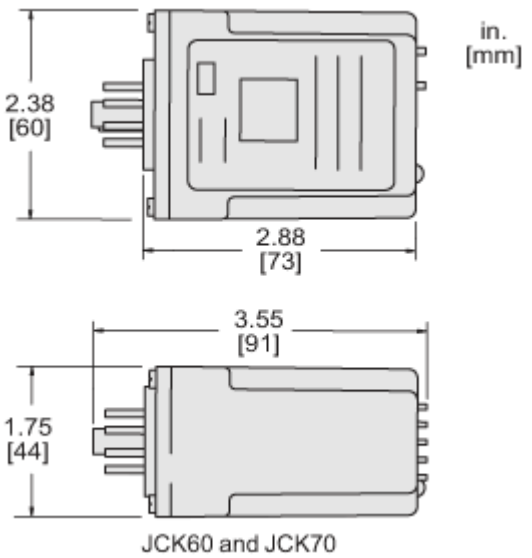

JCK60 and JCK70

Connections and Schema

## Connections and Wiring Diagrams

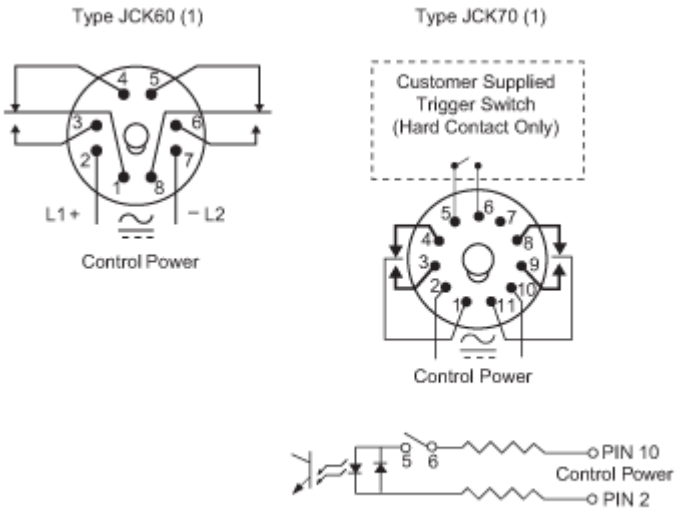


(1) Do not apply DC voltage to the 240 Vac timers (voltage code V24).

Image of product / Alternate images

**Alternative**

9050JCK70V20
Ser. H
ELECTRICAL TIMING RELAY
RELEVADOR DE TEMPORIZACION ELECTRICO
RELAIS À TEMPORISATION ÉLECTRIQUE
Multi-Function / Multifunciones /
Multifonctions
0.05S - 999H
CONTACTS/CONTACTOS
1/2HP 120/240V~ (NO)
1/3HP 120/240V~ (NC)
10A-240V~, 30V RES.
AC15/B300 (NO/NC)
DC13/R300(NO)
INPUT
+ ENTRADA ENTRÉE -
LISTED IND CONT EQ 29G6
ONLY WITH SOCKET
SOLAMENTE CON ENCHUFE
SEULEMENT AVEC EMBASE
8501NR61, 8501NR62
120V ~ 50-60Hz
110V
1741
AA
214768
Made in USA: Hecho en EUA: Fabriqué aux É.-U.