Product data sheet

Specifications

advanced touchscreen panel, Harmony GTO, stainless, 800 x 600pixels SVGA, 12.1inch TFT, 96MB

HMIGTO6315

Product availability: Non-Stock - Not normally stocked in distribution facility

Main

Range of Product	Harmony GTO
Product or Component Type	Advanced touchscreen panel
Display colour	65536 colours
Display size	12.1 inch
Supply	External source
Battery type	Lithium internal RAM 100 days 5 day(s) 10 year(s)
Provided Equipment	1 protective cover
Processor name	ARM926EJ-S
Software package	Vijeo Designer

Complementary

Terminal type	Touchscreen display
Display Type	Backlit colour TFT LCD
Display Resolution	800 x 600 pixels SVGA
Touch sensitive zone	1024 x 1024
Touch panel	Resistive film, 1000000 cycles
Backlight lifespan	50000 hours white 77 °F (25 °C)
Brightness	16 levels by touch panel 16 levels by software
Character font	Japanese (ANK, Kanji) ASCII (European characters) Taiwanese (traditional Chinese) Chinese (simplified Chinese) Korean
[Us] rated supply voltage	24 V DC
Supply voltage limits	19.2…28.8 V
Inrush current	30 A
Maximum power consumption in W	12 W when power is not supplied to external devices 7 W when backlight is OFF 8 W when backlight is dimmed 17 W

Price is “List Price” and may be subject to a trade discount – check with your local distributor or retailer for actual price.

Disclaimer: This documentation is not intended as a substitute for and is not to be used for determining suitability or reliability of these products for specific user applications

Local signalling	Status LED green, steady offline Status LED green, steady operating Status LED orange, flashing software starting up Status LED red, steady power supply (ON) Status LED clear, faded power supply (OFF) COM2 LED yellow, steady data is being transmitted COM2 LED yellow, faded no data transmission SD card LED green, steady card is inserted SD card LED green, faded card is not inserted or is not being accessed
Memory description	Flash EPROM, 96 MB
Data backed up	512 KB internal RAM SRAM)
Data storage equipment	SD card, <= 32 GB SDHC card, <= 32 GB
Downloadable protocols	Schneider Electric Modicon Modbus Schneider Electric Modicon Uni-TE Schneider Electric Modicon Modbus Plus Schneider Electric Modicon FIPWAY Mitsubishi Melsec third party protocols Omron Sysmac third party protocols Rockwell Automation Allen-Bradley third party protocols Siemens Simatic third party protocols Schneider Electric Modicon Modbus TCP
Integrated connection type	COM1 serial link SUB-D 9 RS232C 2400...115200 bps COM2 serial link RJ45 RS485 2400...115200 bps COM2 serial link RJ45 RS485 187.5 kbps Siemens MPI Ethernet RJ45 10BASE-T/100BASE-TX Ethernet RJ45 IEEE 802.3 USB 2.0 type A USB 2.0 type mini B
Product mounting	Flush mounting
Fixing mode	by 8 nuts by 4 L brackets
Front material	Stainless steel 304
Enclosure Material	PPT
Type of cooling	Natural convection
Width	14.1 in (359 mm)
Height	11.2 in (285 mm)
Depth	2.2 in (56 mm)
Net Weight	6.6 lb(US) (3 kg)

Environment

Standards	IEC 61000-6-2 UL 508 IEC 61131-2
Product Certifications	CE C-tick cULus KCC UKCA UKEX
Ambient air temperature for operation	32…131 °F (0…55 °C)
Ambient air temperature for storage	-4…140 °F (-20…60 °C)
Relative humidity	10…90 % without condensation
Operating altitude	< 6561.68 ft (2000 m)
IP degree of protection	IP20 IEC 60529 rear panel) IP66K IEC 60529 front panel) IP66K DIN 40050-9 front panel)

NEMA degree of protection	NEMA 4X front panel (indoor use)
Shock resistance	147 m/s² 3 chocks in each direction X, Y and Z IEC 61131-2
Vibration resistance	3.5 mm 5…9 Hz) - X, Y, Z directions for 10 cycles (approx. 100 min) - IEC 61131-2 1 gn 9…150 Hz) - X, Y, Z directions for 10 cycles (approx. 100 min) - IEC 61131-2
Resistance to electrostatic discharge	6 kV contact discharge IEC 61000-4-2 level 3

Ordering and shipping details

Category	US10MC222569
Discount Schedule	0MC2
GTIN	3595864150314
Returnability	No
Country of origin	ID

Packing Units

Unit Type of Package 1	PCE
Nbr. of units in pkg.	1
Package 1 Height	8.071 in (20.500 cm)
Package 1 Width	16.732 in (42.500 cm)
Package 1 Length	21.063 in (53.500 cm)
Package weight(Lbs)	11.041 lb(US) (5.008 kg)
Unit Type of Package 2	P06
Number of Units in Package 2	3
Package 2 Height	29.528 in (75.000 cm)
Package 2 Width	23.622 in (60.000 cm)
Package 2 Length	31.496 in (80.000 cm)
Package 2 Weight	59.525 lb(US) (27.000 kg)

Contractual warranty

Warranty	18 months

Environmental Data

Schneider Electric aims to achieve Net Zero status by 2050 through supply chain partnerships, lower impact materials, and circularity via our ongoing “Use Better, Use Longer, Use Again” campaign to extend product lifetimes and recyclability.

Environmental Data explained

How we assess product sustainability

Environmental footprint

Carbon footprint (kg CO2 eq, Total Life cycle)	949
Environmental Disclosure	Product Environmental Profile

Use Better

Materials and Substances

F-gas usage performance	Only air and vacuum used for insulation / breaking, no F-gas including SF6
Packaging made with recycled cardboard	Yes
Packaging without single use plastic	No
EU RoHS Directive	Pro-active compliance (Product out of EU RoHS legal scope)
SCIP Number	3647523b-250a-4687-bcce-2d1cdcab982a
REACh Regulation	REACh Declaration
California proposition 65	WARNING: This product can expose you to chemicals including: Lead and lead compounds, which is known to the State of California to cause cancer and birth defects or other reproductive harm. For more information go to www.P65Warnings.ca.gov
Halogen content performance	Product contains halogen above thresholds
PVC free	No
Silicon free	No

Use Again

Repack and remanufacture

Recyclability potential, in %	26
Circularity Profile	End of Life Information
Removable battery	User replaceable
Take-back	No
WEEE Label	The product must be disposed on European Union markets following specific waste collection and never end up in rubbish bins.

Dimensions Drawings

Dimensions

External Dimensions

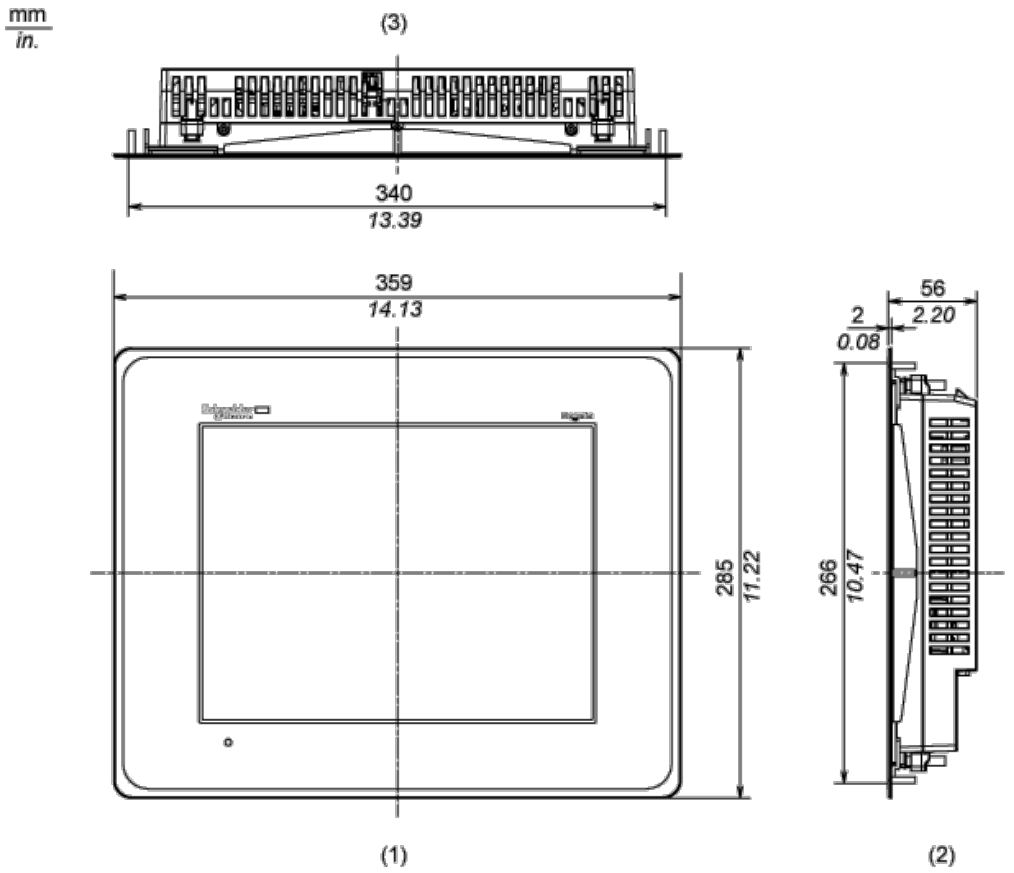

1 Front

2 Right Side

3 Top

Installation with Installation Fasteners

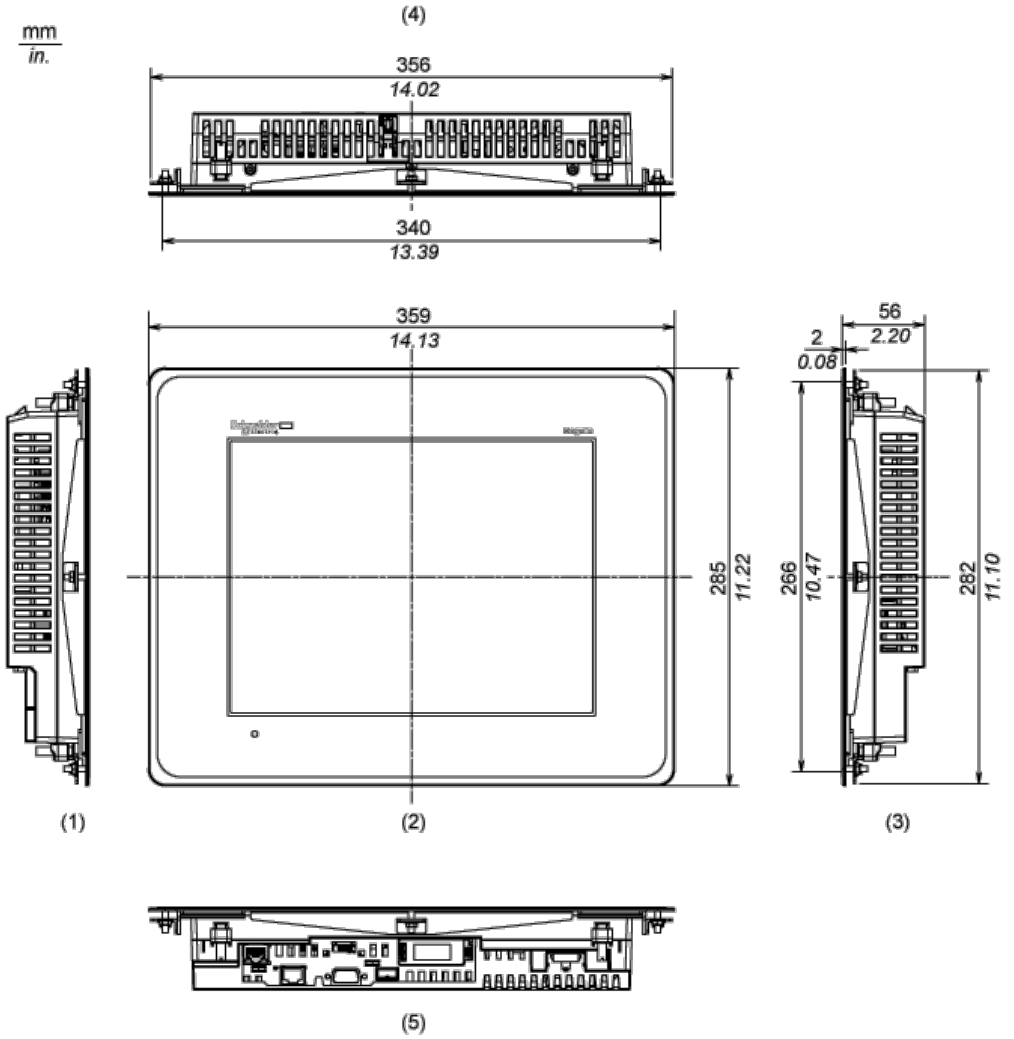

1 Left Side

2 Front

3 Right Side

4 Top

5 Bottom

Dimensions with Cables

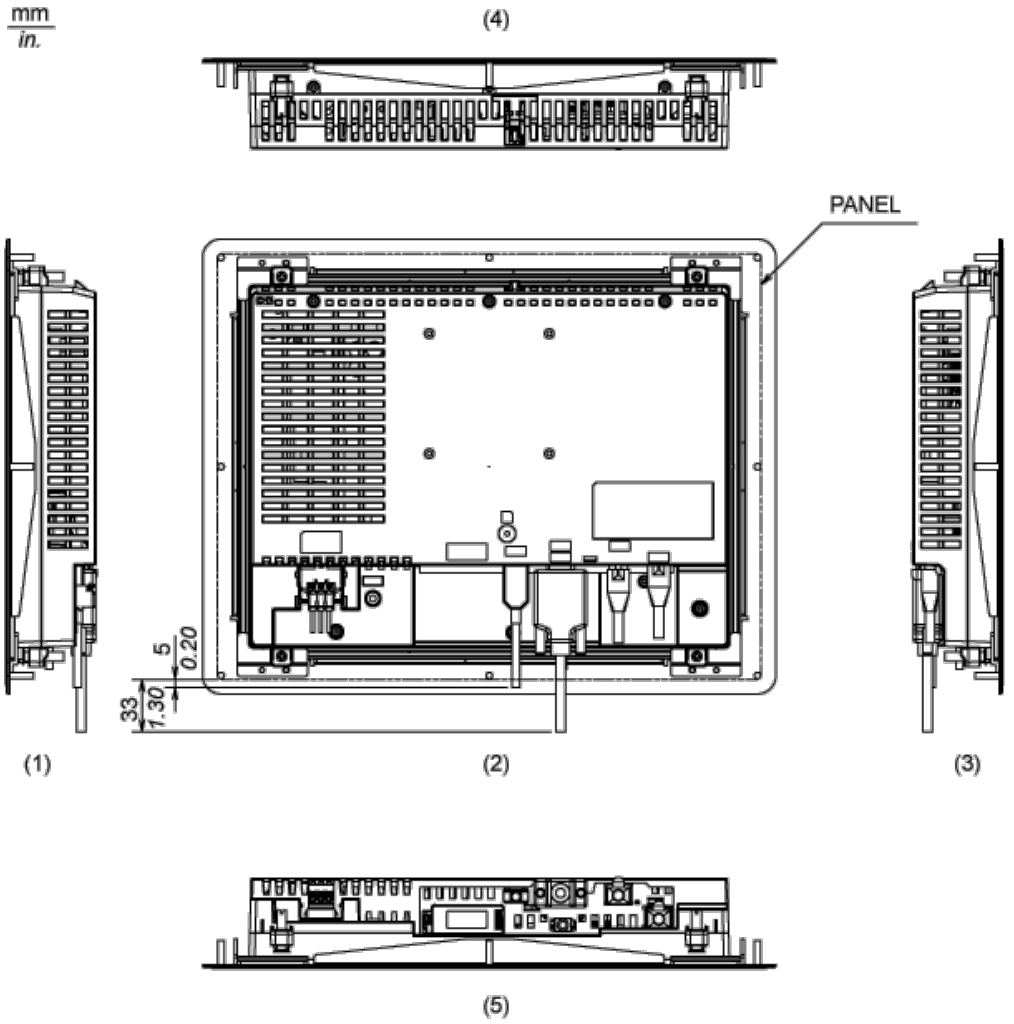

1 Left Side

2 Rear

3 Right Side

4 Top

5 Bottom

Mounting and Clearance

Mounting

Panel Cut Dimensions

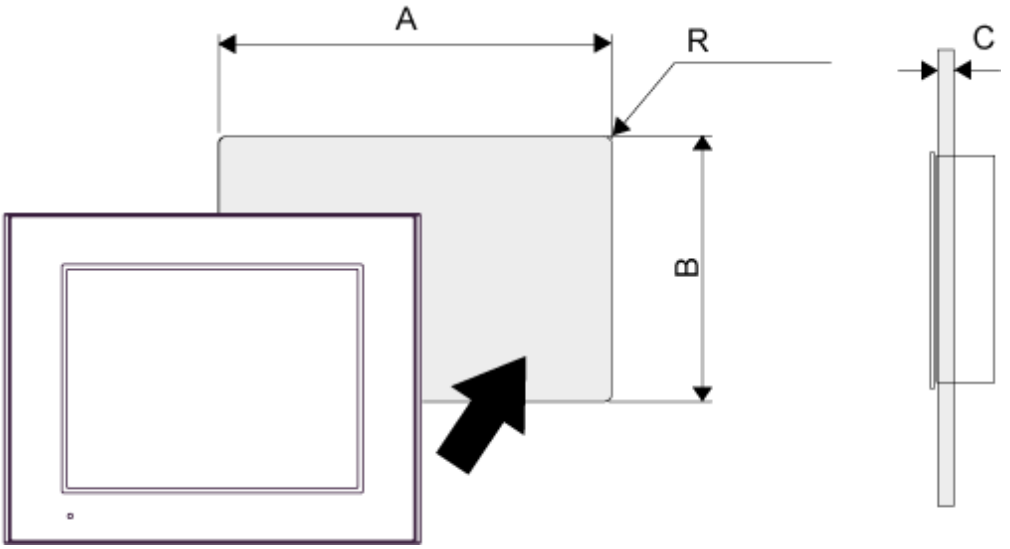

A		B		C		R	
mm	in.	mm	in.	mm	in.	mm	in.
340.5 (+1, -0)	13.41 (+0.04, -0)	266.5 (+1, -0)	10.49 (+0.04, -0)	1.6...5	0.06...0.2	3 max.	0.12 max.

Installation Fastener Dimensions

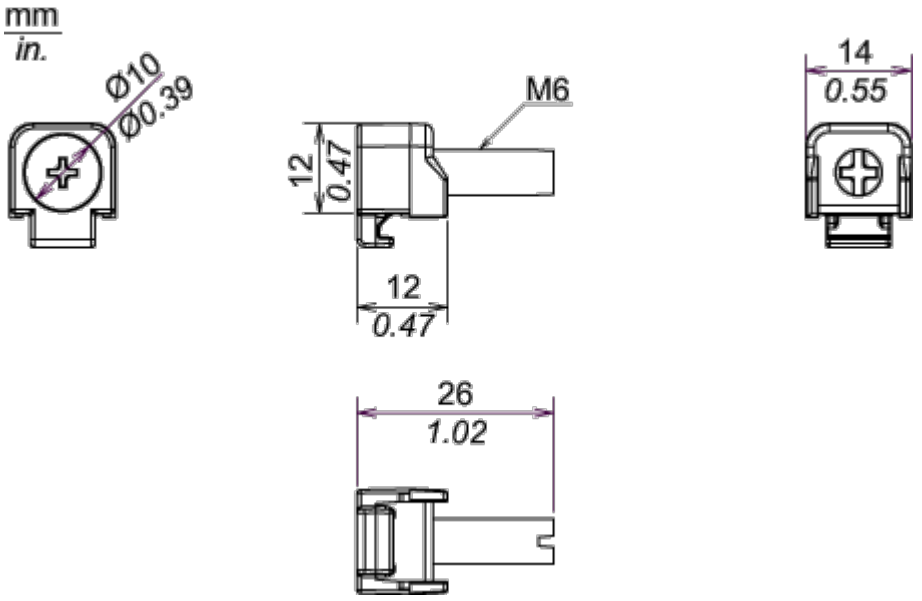

Installation Requirements

Mounting Angle

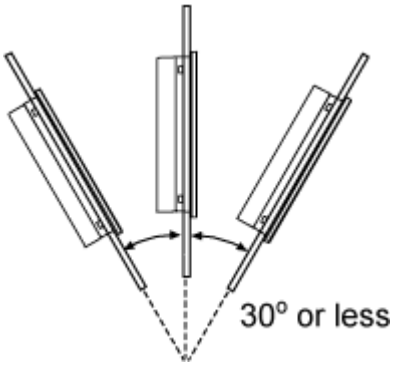

When installing the panel in a slanted position with an incline more than 30°, the ambient temperature must not exceed 40 °C (104 °F). You may need to use forced air cooling (fan,A/C) to ensure the ambient operating temperature is 40°C or less (104 °F or less).
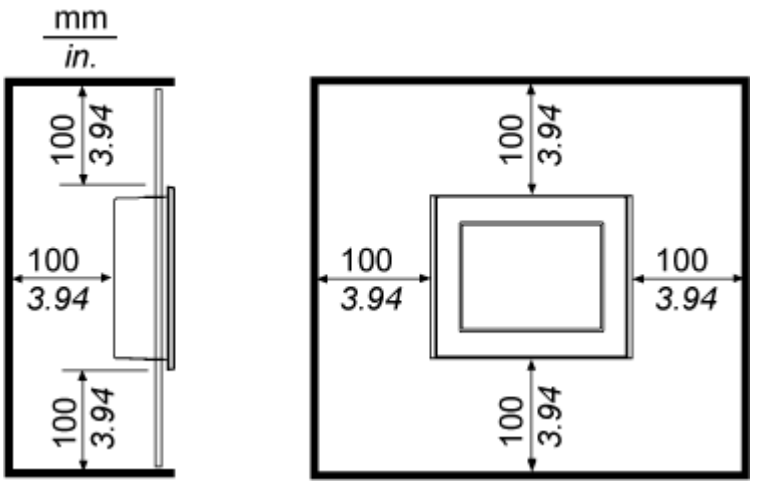
Clearance