Product data sheet

Specifications

miniature plug in relay, Harmony Electromechanical Relays, 12A, 2CO, lockable test but to n 230V AC

RXM2AB1P7

Product availability: Stock - Normally stocked in distribution facility

Main

Range of Product	Harmony Electromechanical Relays
Series name	RXM series
Product or Component Type	Plug-in relay
Relay Type	Miniature relay
Contacts type and composition	2 C/O
Status LED	Without
Control Type	Lockable test button
[Uc] control circuit voltage	230 V AC 50/60 Hz
[Ithe] conventional enclosed thermal current	12 A
Continuous output current	10 A

Complementary

[Uimp] rated impulse withstand voltage	4 kV 1.2/50 µs
[Ie] rated operational current	12 A 28 V DC) NO IEC 12 A 250 V AC) NO IEC 6 A 28 V DC) NC IEC 6 A 250 V AC) NC IEC 12 A 28 V DC) UL 12 A 277 V AC) UL
Minimum switching capacity	170 mW 10 mA, 17 V
Electrical durability	100000 cycles resistive
Average coil consumption in VA	1.2 60 Hz
Rated operational voltage limits	184...253 V AC
[Ui] rated insulation voltage	250 V IEC 300 V CSA 300 V UL
Average consumption	1.2 VA 60 Hz
Maximum switching voltage	250 V IEC
Drop-out voltage threshold	>= 0.15 Uc
Load current	12 A 250 V AC 12 A 28 V DC
Operating time	20 ms
Maximum switching capacity	3000 VA/336 W
Average resistance	15000 Ohm 20 °C +/- 15 %
Mechanical durability	10000000 cycles

Price is “List Price” and may be subject to a trade discount – check with your local distributor or retailer for actual price.

Disclaimer: This documentation is not intended as a substitute for and is not to be used for determining suitability or reliability of these products for specific user applications

Safety reliability data	B10d = 100000
Operating rate	<= 1200 cycles/hour under load <= 18000 cycles/hour no-load
Utilisation coefficient	20 %
reset time	20 ms
Dielectric strength	1300 V AC between contacts with micro disconnection 2000 V AC between coil and contact with basic insulation 2000 V AC between poles with basic insulation
Compatibility code	RXM
Protection category	RT I
Pollution degree	3
Operating position	Any position
Test levels	Level A group mounting
Device presentation	Complete product
Contacts material	AgNi
Shape of pin	Flat (faston type)
Net Weight	0.082 lb(US) (0.037 kg)

Environment

Ambient air temperature for operation	-40…131 °F (-40…55 °C)
IP degree of protection	IP40 conforming to IEC 60529
Standards	IEC 61810-1 UL 508 CSA C22.2 No 14
Product Certifications	UL Lloyd's CE CSA GOST IECEE CB Scheme
Ambient Air Temperature for Storage	-40…185 °F (-40…85 °C)
Vibration resistance	3 gn +/- 1 mm 10…150 Hz)5 cycles in operation 5 gn +/- 1 mm 10…150 Hz)5 cycles not operating
Shock resistance	10 gnin operation 30 gnnot operating

Ordering and shipping details

Category	US10CP221127
Discount Schedule	0CP2
GTIN	3389119403450
Returnability	Yes
Country of origin	CN

Packing Units

Unit Type of Package 1	PCE
Nbr. of units in pkg.	1
Package 1 Height	0.8 in (2.1 cm)

Package 1 Width	0.9 in (2.2 cm)
Package 1 Length	1.9 in (4.7 cm)
Package weight(Lbs)	1.2 oz (35 g)
Unit Type of Package 2	BB1
Number of Units in Package 2	10
Package 2 Height	1.2 in (3 cm)
Package 2 Width	4.02 in (10.2 cm)
Package 2 Length	4.9 in (12.5 cm)
Package 2 Weight	13.5 oz (382 g)
Unit Type of Package 3	S02
Number of Units in Package 3	240
Package 3 Height	5.9 in (15 cm)
Package 3 Width	11.8 in (30 cm)
Package 3 Length	15.7 in (40 cm)
Package 3 Weight	21.374 lb(US) (9.695 kg)

Contractual warranty

Warranty	18 months

Environmental Data

Schneider Electric aims to achieve Net Zero status by 2050 through supply chain partnerships, lower impact materials, and circularity via our ongoing “Use Better, Use Longer, Use Again” campaign to extend product lifetimes and recyclability.

Environmental Data explained >

How we assess product sustainability >

Environmental footprint

Carbon footprint (kg CO2 eq, Total Life cycle)	19
Environmental Disclosure	Product Environmental Profile

Use Better

Materials and Substances

Packaging made with recycled cardboard	Yes
Packaging without single use plastic	Yes
EU RoHS Directive	Pro-active compliance (Product out of EU RoHS legal scope)
REACh Regulation	REACh Declaration
California proposition 65	WARNING: This product can expose you to chemicals including: Nickel compounds, which is known to the State of California to cause cancer, and Di-isodecyl phthalate (DIDP), which is known to the State of California to cause birth defects or other reproductive harm. For more information go to www.P65Warnings.ca.gov

Use Again

Repack and remanufacture

Circularity Profile	End of Life Information
Take-back	No

Dimensions Drawings

Dimensions

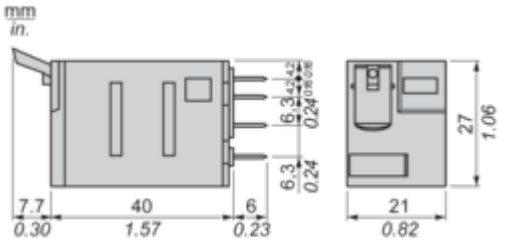

Pin Side View

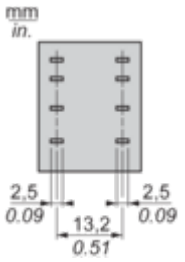

Connections and Schema

Wiring Diagram

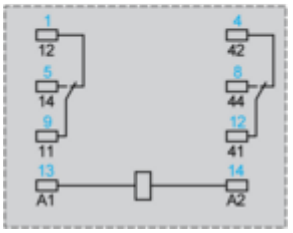

Symbols shown in blue correspond to Nema marking.

Performance Curves

Electrical Durability of Contacts

Durability (inductive load) = durability (resistive load) x reduction coefficient.
Resistive AC load

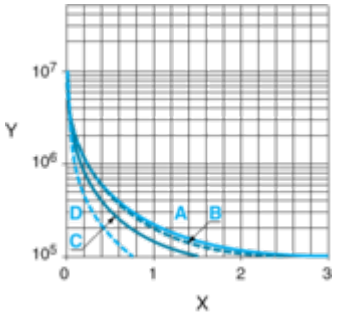

X Switching capacity (kVA)
Y Durability (Number of operating cycles)
A RXM2AB•••
B RXM3AB•••
C RXM4AB•••
D RXM4GB•••

Reduction coefficient for inductive AC load (depending on power factor cos ϕ)

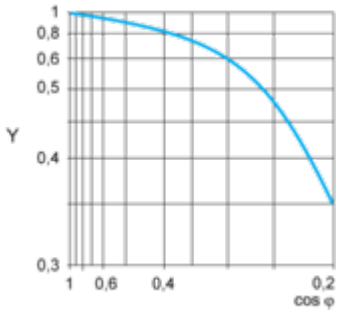

Y Reduction coefficient (A)

Maximum switching capacity on resistive DC load

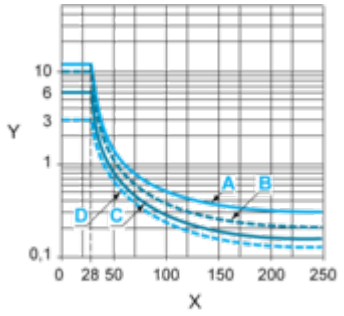

X Voltage DC
Y Current DC
A RXM2AB•••
B RXM3AB•••
C RXM4AB•••
D RXM4GB•••
Note : These are typical curves, actual durability depends on load, environment, duty cycle, etc.
For inductive load, to increase relay life cycles, please add a proper load protection circuit (eg: RC protection/Varistor/ free Wheeling diode -DC load only-).
For low level loads (below 10mA), we recommend to use RXM*GB series with bifurcated contacts relays instead.

AC Coil Voltage and Operating Temperature under continuous duty

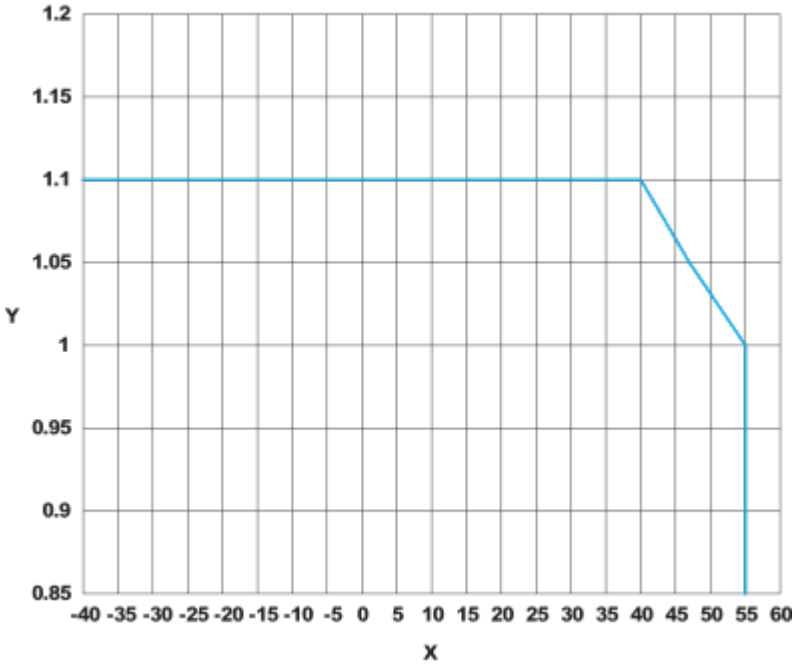

X : Operating temperature (°C)
Y : AC coil voltage (UC)

Technical Illustration

Dimensions

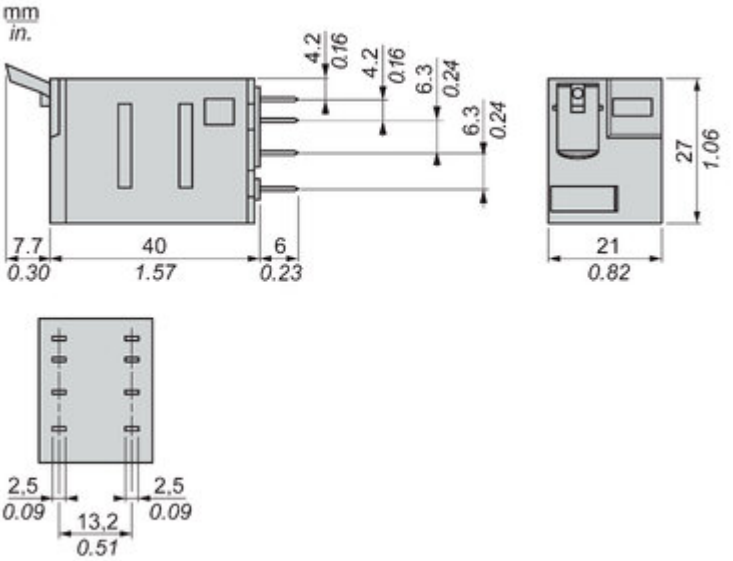

Offer Marketing Illustration

Product benefits / Features

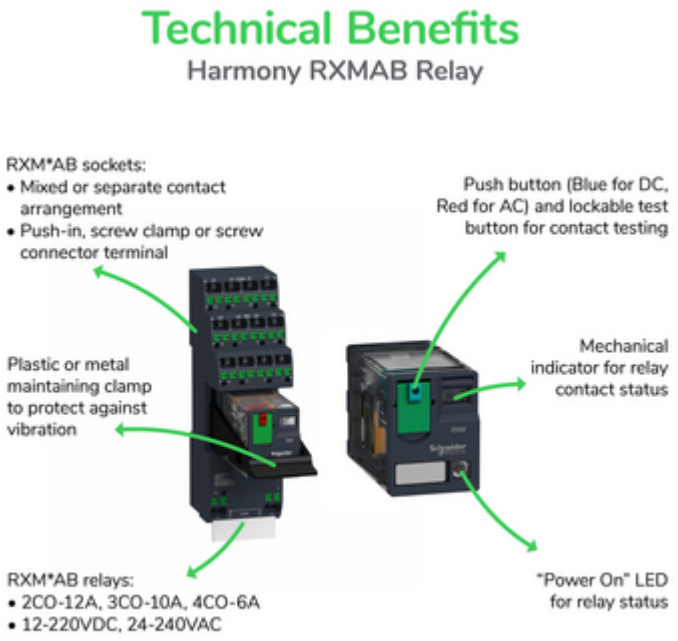

Offer Marketing Illustration

Product benefits / Features

Image of product / Alternate images

Alternative

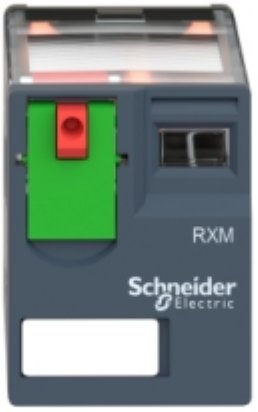

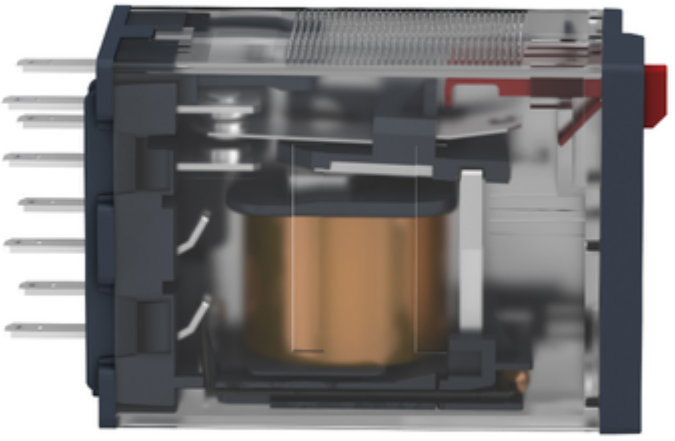

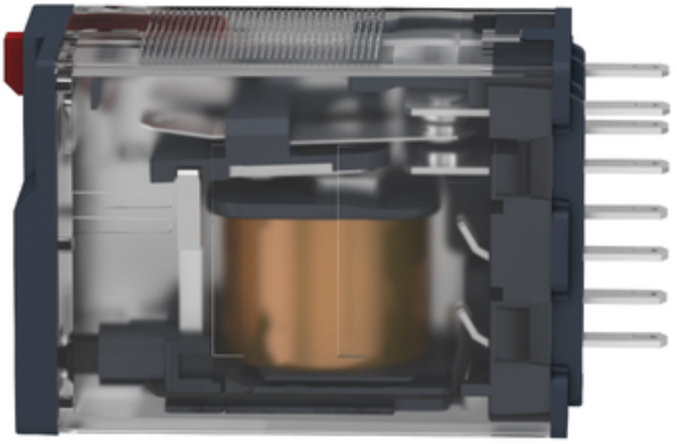

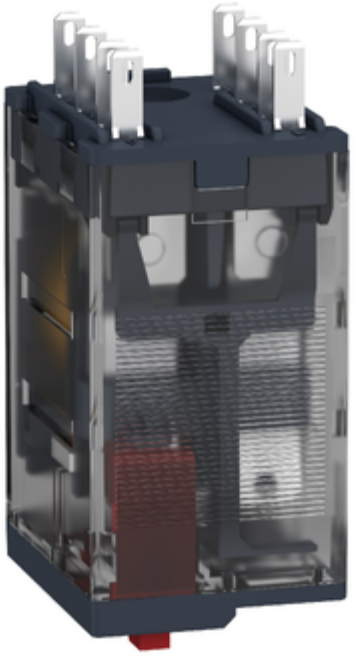

1
4
5
8
9
12
13
14