Product data sheet

Specifications

Flat screen, Harmony GTU, 10.4 Touch Smart Display SVGA, coated display

HMIDT542FC

Product availability: Non-Stock - Not normally stocked in distribution facility

Main

Range of Product	Harmony GTU
Product or Component Type	Flat screen
Terminal type	Touchscreen display
[Us] rated supply voltage	12...24 V DC power supply
Supply voltage limits	10.8…28.8 V
Power Consumption in W	15 W
Inrush current	30 A

Complementary

Integrated connection type	USB 2.0 type A
Touchscreen resolution	1024 x 1024
Pixel resolution	800 x 600
Display size	10.4 inch
Aspect ratio	4:3
Display type	Colour TFT LCD
Display Resolution	800 x 600 pixels SVGA
Display colour	16 million colours
Backlight lifespan	50000 hours
Touch panel	Multi touch analogue resistive
Provided equipment	1 flash card
Function Available	Brightness sensor
Type of cooling	Natural convection
Type of Installation	Indoor installation
Cut-out dimensions	259 (+ 1/- 0) x 201 (+ 1/- 0) mm
Width	10.7 in (272.5 mm)
Height	8.4 in (214.5 mm)
Depth	2.6 in (67 mm)
Net Weight	6.0 lb(US) (2.7 kg)

Environment

IP degree of protection	Front panel IP66

Price is “List Price” and may be subject to a trade discount – check with your local distributor or retailer for actual price.

Disclaimer: This documentation is not intended as a substitute for and is not to be used for determining suitability or reliability of these products for specific user applications

NEMA degree of protection	NEMA 4X front panel
Standards	UL 508
Product certifications	CE UKCA UKEX
Ambient air temperature for operation	32…140 °F (0…60 °C) IEC 61131-2
Ambient air temperature for storage	-4…140 °F (-20…60 °C)
Relative Humidity	10…90 % non-condensing
Operating altitude	6561.68 ft (2000 m)
Vibration resistance	3.5 mm constant amplitude 5…9 Hz) IEC 61131-2
Shock resistance	147 m/s²IEC 61131-2
Electromagnetic compatibility	Electrostatic discharge immunity test level 3 conforming to IEC 61000-4-2

Ordering and shipping details

Category	US10MC222567
Discount Schedule	0MC2
GTIN	3606480841668
Returnability	No
Country of origin	CN

Packing Units

Unit Type of Package 1	PCE
Nbr. of units in pkg.	1
Package 1 Height	7.5 in (19.0 cm)
Package 1 Width	13.0 in (33.0 cm)
Package 1 Length	14.8 in (37.5 cm)
Package weight(Lbs)	8.8 lb(US) (4.0 kg)
Unit Type of Package 2	CAR
Number of Units in Package 2	2
Package 2 Height	16.9 in (43.0 cm)
Package 2 Width	14.0 in (35.5 cm)
Package 2 Length	17.9 in (45.5 cm)
Package 2 Weight	18.274 lb(US) (8.289 kg)

Environmental Data

Schneider Electric aims to achieve Net Zero status by 2050 through supply chain partnerships, lower impact materials, and circularity via our ongoing “Use Better, Use Longer, Use Again” campaign to extend product lifetimes and recyclability.

Environmental Data explained >

How we assess product sustainability >

Environmental footprint

Carbon footprint (kg CO2 eq, Total Life cycle)	774
Environmental Disclosure	Product Environmental Profile

Use Better

Materials and Substances

F-gas usage performance	Only air and vacuum used for insulation / breaking, no F-gas including SF6
Packaging made with recycled cardboard	Yes
Packaging without single use plastic	No
EU RoHS Directive	Pro-active compliance (Product out of EU RoHS legal scope)
SCIP Number	F7bde1f0-e6bc-4b91-91d2-88584de513eb
REACh Regulation	REACh Declaration
California proposition 65	WARNING: This product can expose you to chemicals including: Lead and lead compounds, which is known to the State of California to cause cancer and birth defects or other reproductive harm. For more information go to www.P65Warnings.ca.gov
Halogen content performance	Product contains halogen above thresholds
PVC free	No
Silicon free	No

Use Again

Repack and remanufacture

Circularity Profile	End of Life Information
Take-back	No
WEEE Label	The product must be disposed on European Union markets following specific waste collection and never end up in rubbish bins.

Dimensions Drawings

External Dimensions

Display Unit with Box Module

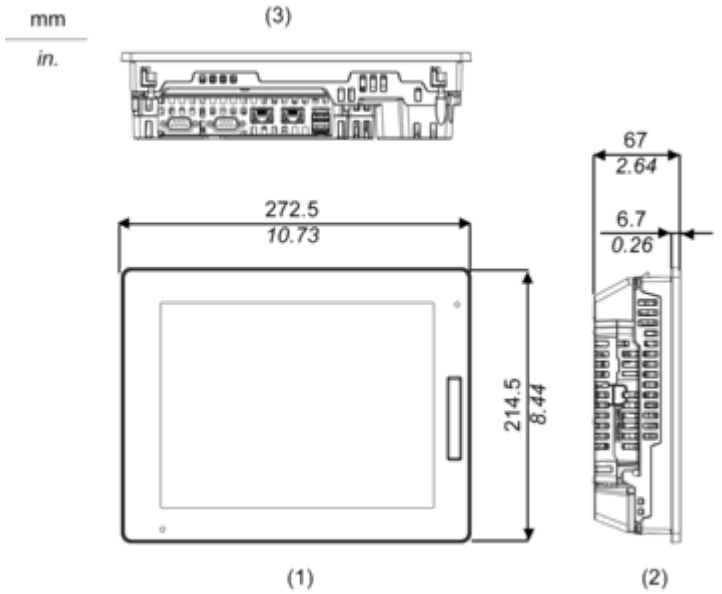

1 Front
2 Left
3 Bottom

Installation with Installation Fasteners and Dimensions with Cables

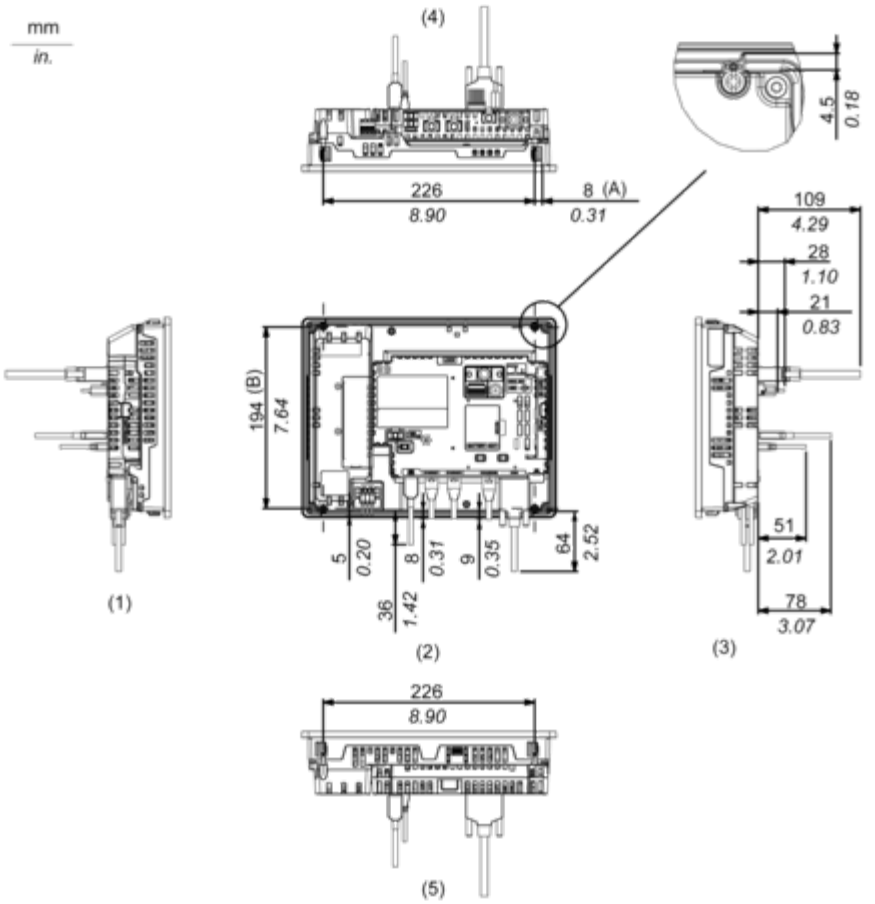

(A) Rotation area of the fastener
(B) Pitch of the center of installation fastner screws
1 Right
2 Front
3 Left
4 Bottom
5 Top

Mounting and Clearance

Mounting

Panel Cut Dimensions

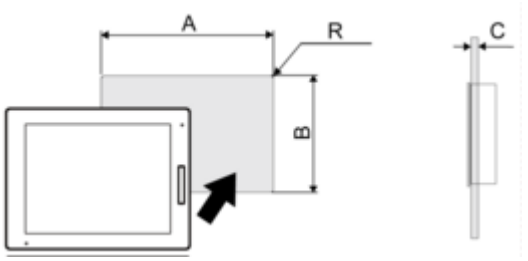

Dimensions in mm

A	B	C	R
259 (+1/-0)	201 (+1/-0)	1.6...5	3 max.

Dimensions in in.

A	B	C	R
10.2 (+0.04/-0)	7.91 (+0.04/-0)	0.06...0.2	0.12 max.

Installation Requirements

Mounting Angle

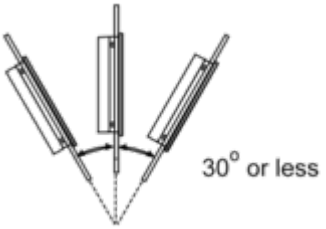

When installing this product in a slanted position with an incline more than 30°, the ambient temperature must not exceed 40 °C (104 °F). You may need to use forced air cooling (fan, A/C) to ensure the ambient operating temperature is 40 °C or less (104 °F or less).
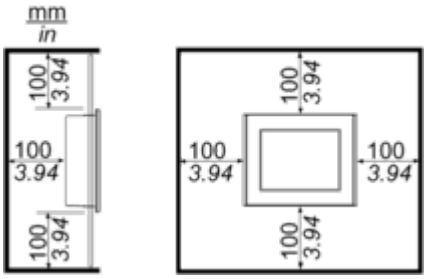
Clearance