Product data sheet

Specifications

Safety switch, heavy duty, fusible, 30A, 3 pole, 20HP, 600V AC/DC, NEMA 4X Krydon fiberglass polyester

H361DX

Product availability: Non-Stock - Not normally stocked in distribution facility

Main

Product	Single Throw Safety Switch
Duty Rating	Heavy duty
Device Application	Heavy application
Disconnect Type	Fusible disconnect
Factory Installed Neutral	None
Number of Poles	3
Current Rating	30 A
Voltage Rating	600 V AC/DC
Enclosure Rating	NEMA 4X Krydon - compression molded fiberglass reinforced polyester
Standard Motor Power Rating	5 hp at 480 V AC 50-60 Hz for 3 phase motors 15 hp at 480 V AC 50-60 Hz for 3 phase motors 7.5 hp at 600 V AC 50-60 Hz for 3 phase motors 20 hp at 600 V AC 50-60 Hz for 3 phase motors 15 hp at 600 V DC

Complementary

Short-circuit current	10 kA for H or K 200 kA for R or J
Fuse type	H or K R or J
Mounting Type	Surface
Electrical Connection	Lugs
Wiring configuration	3-wire (3P)
Wire Size	AWG 12...AWG 6 aluminium AWG 14...AWG 6 copper
Tightening torque	45 lbf.in (5.08 N.m) 0.02 in² (13.3 mm²) (AWG 6) 40 lbf.in (4.5 N.m) 0.013 in² (8.367 mm²) (AWG 8) 35 lbf.in (4.0 N.m) 0.003…0.008 in² (2.06…5.261 mm²) (AWG 14...AWG 10)
Depth	8.6 in (218.4 mm)
Width	11.4 in (289.6 mm)
Height	19.4 in (492.8 mm)
Net Weight	30.0 lb(US) (13.6 kg)

Environment

Certifications	UL listed file E2875

Price is “List Price” and may be subject to a trade discount – check with your local distributor or retailer for actual price.

Disclaimer: This documentation is not intended as a substitute for and is not to be used for determining suitability or reliability of these products for specific user applications

Ordering and shipping details

Category	US10DE100111
Discount Schedule	0DE1
GTIN	785901011040
Returnability	Yes
Country of origin	MX

Packing Units

Unit Type of Package 1	PCE
Nbr. of units in pkg.	1
Package 1 Height	7.638 in (19.401 cm)
Package 1 Width	3.4 in (8.6 cm)
Package 1 Length	4.5 in (11.4 cm)
Package weight(Lbs)	32.201 lb(US) (14.606 kg)

Contractual warranty

Warranty (in months)	18

Environmental Data

Schneider Electric aims to achieve Net Zero status by 2050 through supply chain partnerships, lower impact materials, and circularity via our ongoing “Use Better, Use Longer, Use Again” campaign to extend product lifetimes and recyclability.

Environmental Data explained >

How we assess product sustainability >

Environmental footprint

Carbon footprint (kg CO2 eq, Total Life cycle)	122
Environmental Disclosure	Product Environmental Profile

Use Better

Materials and Substances

Packaging made with recycled cardboard	Yes
Packaging without single use plastic	No
EU RoHS Directive	Compliant
SCIP Number	Fcbb2f4b-148e-498d-b15c-530db69350d4
REACh Regulation	REACh Declaration
California proposition 65	WARNING: This product can expose you to chemicals including: Lead and lead compounds, which is known to the State of California to cause cancer and birth defects or other reproductive harm. For more information go to www.P65Warnings.ca.gov
PVC free	Yes

Use Again

Repack and remanufacture

Circularity Profile	No need of specific recycling operations
Take-back	No

Technical Illustration

Dimensions

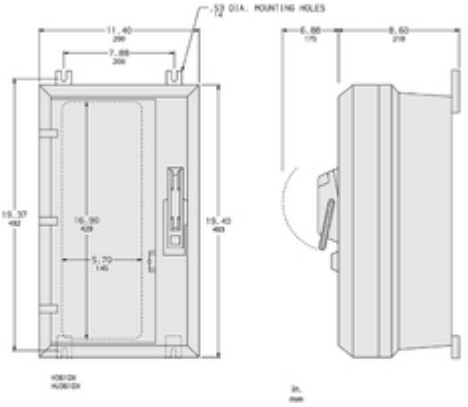

ALL DIMENSIONS ARE APPROXIMATE.
REFER TO CAD, TECHNICAL DRAWINGS, AND
DOCUMENTATION FOR COMPLETE INFORMATION.

Technical Illustration

Wiring diagram

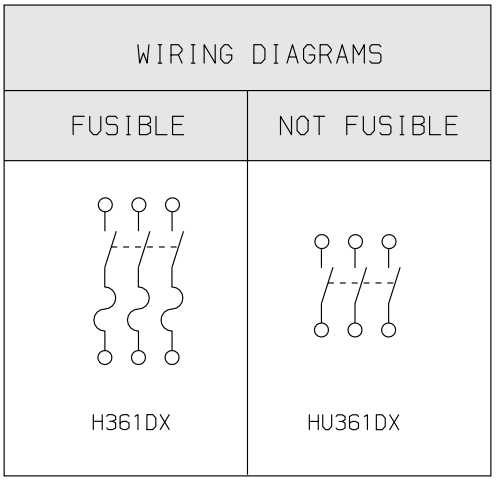

REFER TO CAD, TECHNICAL DRAWINGS, AND DOCUMENTATION FOR COMPLETE INFORMATION.