# Product data sheet

Specifications

## Head for illuminated selector switch, Harmony XB4, chromium metal, orange handle, 22mm, universal LED, 2 positions,

ZB4BK1453

**Product availability: Non-Stock - Not normally stocked in distribution facility**
**Important message: A change in appearance may be noted on the product but does not affect its use in terms of function and safety. This makes it compatible with our Universal LED blocks**

## Main

| | |
|---|---|
| **Range of Product** | Harmony XB4 |
| **Product or Component Type** | Head for illuminated selector switch |
| **Product Compatibility** | Universal LED |
| **Device short name** | ZB4 |
| **Bezel material** | Chromium plated metal |
| **Head type** | Standard |
| **Mounting diameter** | 0.9 in (22.5 mm) |
| **Sale per indivisible quantity** | 1 |
| **Shape of signaling unit head** | Round |
| **Type of operator** | Right to left spring return |
| **Operator profile** | Orange standard handle |
| **Operator position information** | 2 positions 90° |
| **Cap/operator or lens colour** | Orange |

## Complementary

| | |
|---|---|
| **CAD overall width** | 1.1 in (29 mm) |
| **CAD overall height** | 1.1 in (29 mm) |
| **CAD overall depth** | 1.7 in (43 mm) |
| **Net Weight** | 0.082 lb(US) (0.037 kg) |
| **Resistance to high pressure washer** | 1015.3 psi (7000000 Pa) 131 °F (55 °C) 0.1 m |
| **Mechanical durability** | 500000 cycles |
| **Electrical composition code** | M3 4 single front mounting integral LED<br>M6 2 single front mounting integral LED and transformer<br>M10 2 single front mounting integral LED<br>M4 4 single and double front mounting integral LED |
| **Device presentation** | Basic element |

## Environment

| | |
|---|---|
| **Protective treatment** | TH |
| **Ambient Air Temperature for Storage** | -40…158 °F (-40…70 °C) |

Price is “List Price” and may be subject to a trade discount – check with your local distributor or retailer for actual price.

Disclaimer: This documentation is not intended as a substitute for and is not to be used for determining suitability or reliability of these products for specific user applications

| | |
|---|---|
| **Ambient air temperature for operation** | -40…158 °F (-40…70 °C) |
| **Overvoltage category** | Class I conforming to IEC 60536 |
| **IP degree of protection** | IP66 IEC 60529<br>IP67<br>IP69<br>IP69K |
| **NEMA degree of protection** | NEMA 13<br>NEMA 4X |
| **IK degree of protection** | IK04 conforming to IEC 50102 |
| **Standards** | CSA C22.2 No 14<br>IEC 60947-5-1<br>IEC 60947-1<br>IEC 60947-5-5<br>IEC 60947-5-4<br>JIS C8201-5-1<br>UL 508<br>JIS C8201-1 |
| **Product Certifications** | BV<br>CSA<br>DNV<br>LROS (Lloyds register of shipping)<br>UL Listed |
| **Vibration resistance** | 5 gn (f= 2…500 Hz) conforming to IEC 60068-2-6 |
| **Shock resistance** | 30 gn 18 ms) half sine wave acceleration IEC 60068-2-27<br>50 gn 11 ms) half sine wave acceleration IEC 60068-2-27 |

## Ordering and shipping details

| | |
|---|---|
| **Category** | US10CS222468 |
| **Discount Schedule** | 0CS2 |
| **GTIN** | 3389110894950 |
| **Returnability** | Yes |
| **Country of origin** | FR |

## Packing Units

| | |
|---|---|
| **Unit Type of Package 1** | PCE |
| **Nbr. of units in pkg.** | 1 |
| **Package 1 Height** | 1.890 in (4.800 cm) |
| **Package 1 Width** | 2.047 in (5.200 cm) |
| **Package 1 Length** | 1.299 in (3.300 cm) |
| **Package weight(Lbs)** | 1.513 oz (42.900 g) |
| **Unit Type of Package 2** | BB1 |
| **Number of Units in Package 2** | 5 |
| **Package 2 Height** | 1.890 in (4.800 cm) |
| **Package 2 Width** | 10.433 in (26.500 cm) |
| **Package 2 Length** | 1.299 in (3.300 cm) |
| **Package 2 Weight** | 7.584 oz (215.000 g) |
| **Unit Type of Package 3** | S03 |
| **Number of Units in Package 3** | 250 |
| **Package 3 Height** | 11.811 in (30.000 cm) |

| | |
|---|---|
| **Package 3 Width** | 11.811 in (30.000 cm) |
| **Package 3 Length** | 15.748 in (40.000 cm) |
| **Package 3 Weight** | 25.095 lb(US) (11.383 kg) |

## Contractual warranty

| | |
|---|---|
| **Warranty** | 18 months |

## Environmental Data

Schneider Electric aims to achieve Net Zero status by 2050 through supply chain partnerships, lower impact materials, and circularity via our ongoing “Use Better, Use Longer, Use Again” campaign to extend product lifetimes and recyclability.

Environmental Data explained >

How we assess product sustainability >

### Environmental footprint

| | |
|---|---|
| Carbon footprint (kg CO2 eq, Total Life cycle) | 1 |
| Environmental Disclosure | Product Environmental Profile |

## Use Better

### Materials and Substances

| | |
|---|---|
| Packaging made with recycled cardboard | No |
| Packaging without single use plastic | No |
| EU RoHS Directive | Pro-active compliance (Product out of EU RoHS legal scope) |
| REACh Regulation | REACh Declaration |
| California proposition 65 | WARNING: This product can expose you to chemicals including: Di-isodecyl phthalate (DIDP), which is known to the State of California to cause birth defects or other reproductive harm. For more information go to www.P65Warnings.ca.gov |

## Use Again

### Repack and remanufacture

| | |
|---|---|
| Circularity Profile | End of Life Information |
| Take-back | No |

Dimensions Drawings

## Dimensions

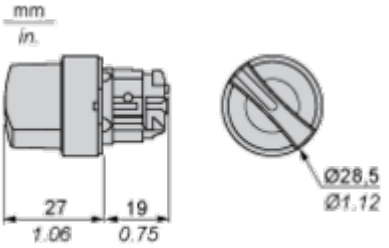

## Mounting and Clearance

### Panel Cut-out for Pushbuttons, Switches and Pilot Lights (Finished Holes, Ready for Installation)

| Connection by Screw Clamp Terminals or Plug-in Connectors or on Printed Circuit Board | Connection by Faston Connectors |
|---|---|
| 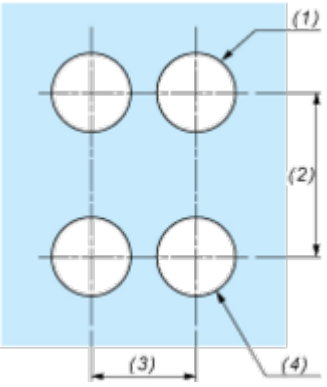 | 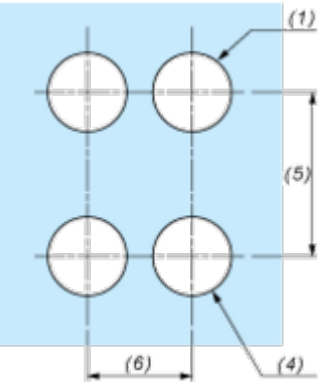 |

**(1)** Diameter on finished panel or support
**(2)** 40 mm min. / 1.57 in. min.
**(3)** 30 mm min. / 1.18 in. min.
**(4)** Ø 22.5 mm / 0.89 in. recommended (Ø 22.3 mm $_{0}^{+0.4}$ / 0.88 in. $_{0}^{+0.016}$)
**(5)** 45 mm min. / 1.78 in. min.
**(6)** 32 mm min. / 1.26 in. min.

## Pushbuttons, Switches and Pilot Lights for Printed Circuit Board Connection

### Panel Cut-outs (Viewed from Installer's Side)

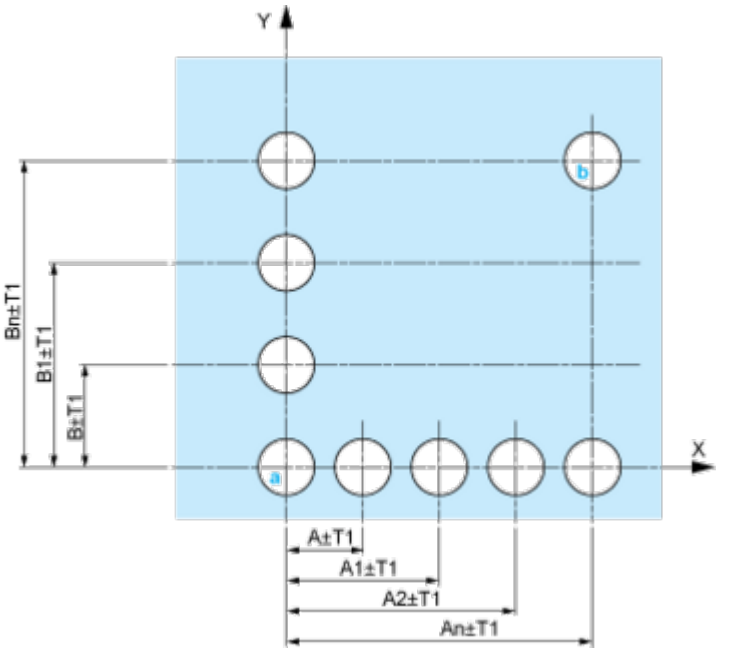


**A:** 30 mm min. / 1.18 in. min.
**B:** 40 mm min. / 1.57 in. min.

### Printed Circuit Board Cut-outs (Viewed from Electrical Block Side)

Dimensions in mm

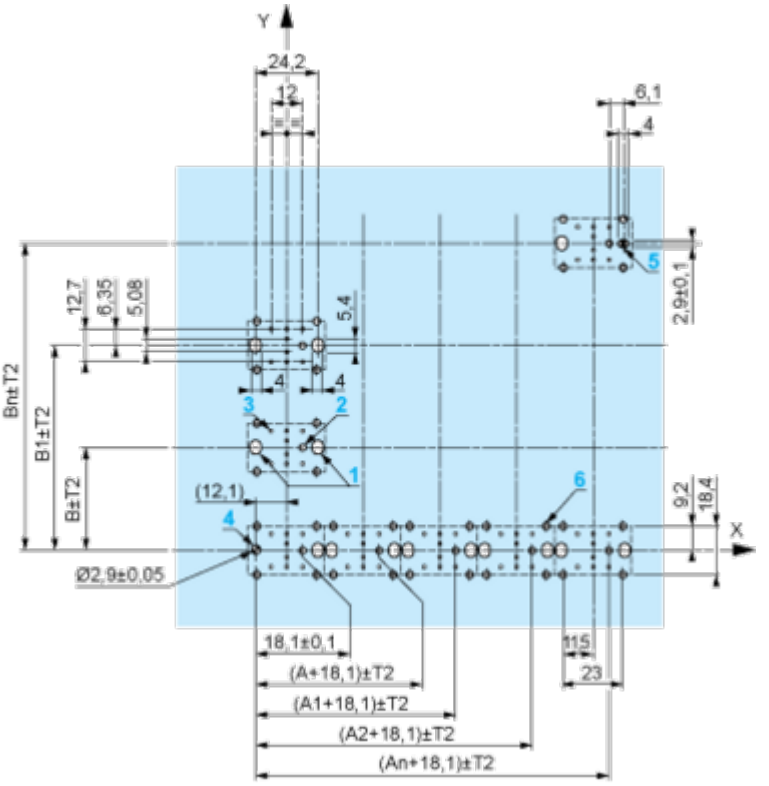


**A:** 30 mm min.
**B:** 40 mm min.
Dimensions in in.

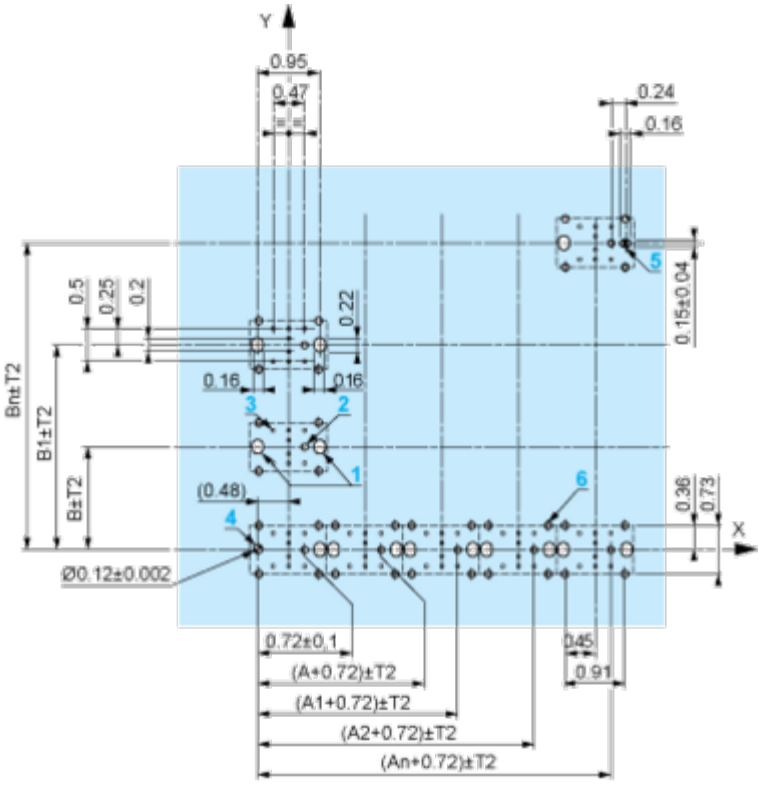


**A:** 1.18 in. min.
**B:** 1.57 in. min.

### General Tolerances of the Panel and Printed Circuit Board

The cumulative tolerance must not exceed 0.3 mm / 0.012 in: T1 + T2 = 0.3 mm max.

### Installation Precautions

- Minimum thickness of circuit board: 1.6 mm / 0.06 in.
- Cut-out diameter: 22.4 mm ± 0.1 / 0.88 in. ± 0.004
- Orientation of body/fixing collar ZB4 BZ009: ± 2°30' (excluding cut-outs marked **a** and **b**).
- Tightening torque of screws ZBZ 006: 0.6 N.m (5.3 lbf.in) max.
- Allow for one ZB4 BZ079 fixing collar/pillar and its fixing screws:
  - every 90 mm / 3.54 in. horizontally (X), and 120 mm / 4.72 in. vertically (Y).
  - with each selector switch head (ZB4 BD•, ZB4 BJ•, ZB4 BG•).

The fixing centers marked **a** and **b** are diagonally opposed and must align with those marked **4** and **5**.

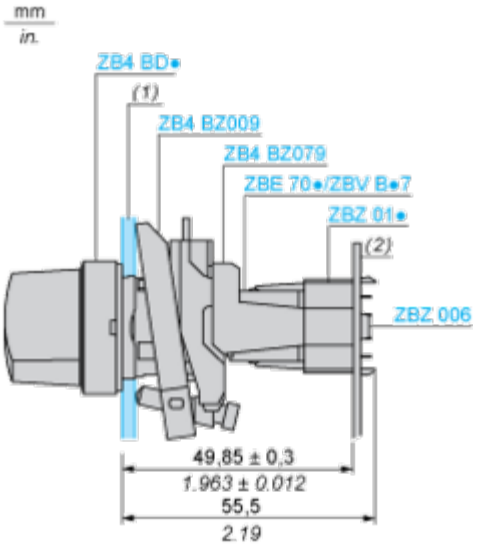


**(1)** Panel
**(2)** Printed circuit board

### Mounting of Adapter (Socket) ZBZ 01•

- **1** 2 elongated holes for ZBZ 006 screw access
- **2** 1 hole Ø 2.4 mm ± 0.05 / 0.09 in. ± 0.002 for centring adapter ZBZ 01•
- **3** 8 × Ø 1.2 mm / 0.05 in. holes
- **4** 1 hole Ø 2.9 mm ± 0.05 / 0.11 in. ± 0.002, for aligning the printed circuit board (with cut-out marked **a**)
- **5** 1 elongated hole for aligning the printed circuit board (with cut-out marked **b**)
- **6** 4 holes Ø 2.4 mm / 0.09 in. for clipping in adapter ZBZ 01•

Dimensions An + 18.1 relate to the Ø 2.4 mm ± 0.05 / 0.09 in. ± 0.002 holes for centring adapter ZBZ 01•.

Technical Description

**Electrical Composition Corresponding to Code M3**

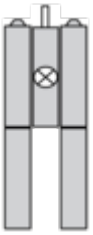

## Electrical Composition Corresponding to Code M4

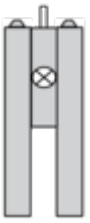

## Electrical Composition Corresponding to Codes M6 and P2

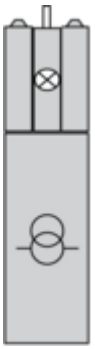

## Electrical Composition Corresponding to Codes M5, M10, MF1, MR1 and MF2

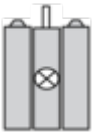

## Legend

Single contact

Double contact

Light block

Possible location

## Sequence of Contacts Fitted to 2-position Selector Switch Body

### Position 315°

| | | | | | |
|---|---|---|---|---|---|
| **Push** | Position | Top | ▭ | | ▭ |
| | | Bottom | △ | | △ |
| | Location | | Left | | Right |
| | State | | 0 | | 0 |
| **Contacts** | N/O | | open | | open |
| | N/C | | closed | | closed |

### Position 45°

| | | | | | |
|---|---|---|---|---|---|
| **Push** | Position | Top | | | |
| | | Bottom | ▭ | | ▭ |
| | Location | | Left | | Right |
| | State | | 1 | | 1 |
| **Contacts** | N/O | | closed | | closed |
| | N/C | | open | | open |

Technical Illustration

## Dimensions

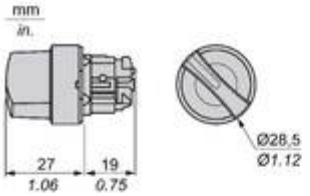


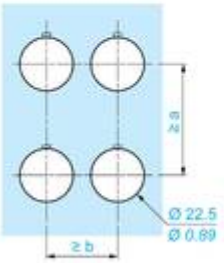


| | | a (mm) | a (in.) | b (mm) | b (in.) |
|---|---|---|---|---|---|
| ZBE●●●●● | ZBV●●●● | 40 | 1.57 | 30 | 1.18 |
| ZBE●●●●●3 | ZBV●●●●3 | 45 | 1.77 | 32 | 1.26 |
| ZBE●●●●●4 | ZBV●●●●4 | 40 | 1.57 | 30 | 1.18 |
| ZBE●●●●●5 | ZBV●●●●5 | 50 | 1.97 | 30 | 1.18 |
| ZBE●●●●●9 | ZBV●●●●9 | 40 | 1.57 | 30 | 1.18 |
| ZBRT● | ZBRV1 | 40 | 1.57 | 30 | 1.18 |

Offer Marketing Illustration

**Product benefits / Features**

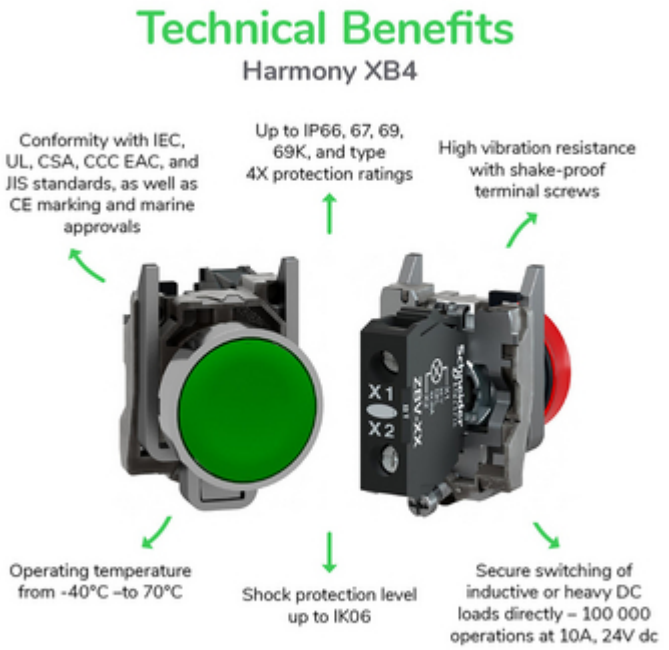

Offer Marketing Illustration

## Product benefits / Features

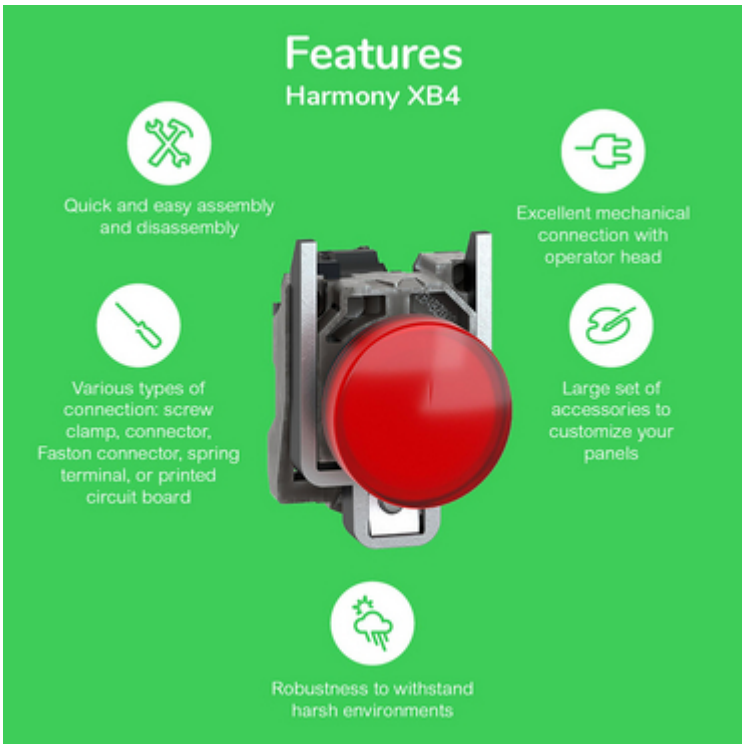

Image of product / Alternate images
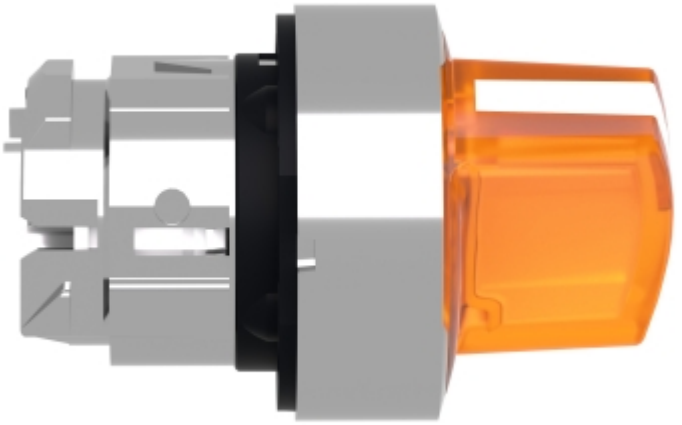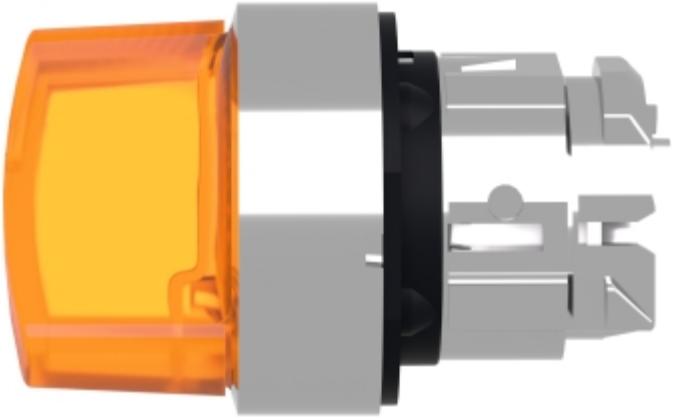
**Alternative**