# Product data sheet

Specifications

## Light Module, Harmony XVB7 Modular Tower Light, Blue, Ø70mm, Blinking, Colored Lens

XVB7C56

**Product availability: Stock - Normally stocked in distribution facility**

## Main

| | |
|---|---|
| **Range of Product** | Harmony XVB7 |
| **Product or Component Type** | Light module |
| **Device Composition** | Standard lens |
| **Device short name** | XVB7 |
| **Mounting diameter** | 2.8 in (70 mm) |
| **Signalling type** | Blinking |
| **Light color** | LED, blue |
| **Material** | PC (polycarbonate) |
| **Net Weight** | 0.231 lb(US) (0.105 kg) |
| **Mounting position** | Upright/inverted |

## Complementary

| | |
|---|---|
| **Blinking frequency** | 1 Hz |
| **Service life in hours** | 50000 h |
| **[Ue] rated operational voltage** | 24 V AC/DC |
| **Rated operational voltage limits** | 21.6...26.4 V AC/DC |
| **Current consumption** | 40 mA 24 V AC<br>45 mA 24 V DC |
| **Inrush current** | 0.5 A |
| **Electrical shock protection class** | Class II |
| **[Ui] Rated Insulation Voltage** | 50 V |
| **[Uimp] rated impulse withstand voltage** | 0.5 kV |

## Environment

| | |
|---|---|
| **Pollution degree** | 2 |
| **Ambient Air Temperature for Operation** | -13…140 °F (-25…60 °C) |
| **Ambient Air Temperature for Storage** | -40…158 °F (-40…70 °C) |
| **IP Degree of Protection** | IP66 |
| **Environmental Type ratings** | Type 4/4X/12/13 indoor use only |
| **Vibration resistance** | 6 gn +/- 0.5 mm 10…500 Hz)in operation |
| **Shock resistance** | 30 gn 6 ms) in operation |

Price is “List Price” and may be subject to a trade discount – check with your local distributor or retailer for actual price.

Disclaimer: This documentation is not intended as a substitute for and is not to be used for determining suitability or reliability of these products for specific user applications

| | |
|---|---|
| **Standards** | UL 60947-5-1<br>IEC 60947-5-1<br>CSA C22.2 No 60947-5-1 |
| **Product Certifications** | cULus<br>CCC<br>RCM<br>UKCA<br>CE |

## Ordering and shipping details

| | |
|---|---|
| **Category** | US10CS222612 |
| **Discount Schedule** | 0CS2 |
| **GTIN** | 3606487129387 |
| **Returnability** | Yes |
| **Country of origin** | DE |

## Packing Units

| | |
|---|---|
| **Unit Type of Package 1** | PCE |
| **Nbr. of units in pkg.** | 1 |
| **Package 1 Height** | 2.559 in (6.500 cm) |
| **Package 1 Width** | 2.874 in (7.300 cm) |
| **Package 1 Length** | 2.953 in (7.500 cm) |
| **Package weight(Lbs)** | 3.704 oz (105.000 g) |
| **Unit Type of Package 2** | S03 |
| **Number of Units in Package 2** | 60 |
| **Package 2 Height** | 11.8 in (30 cm) |
| **Package 2 Width** | 11.8 in (30 cm) |
| **Package 2 Length** | 15.7 in (40 cm) |
| **Package 2 Weight** | 14.930 lb(US) (6.772 kg) |

## Contractual warranty

| | |
|---|---|
| **Warranty (in months)** | 18 |

## Environmental Data

Schneider Electric aims to achieve Net Zero status by 2050 through supply chain partnerships, lower impact materials, and circularity via our ongoing “Use Better, Use Longer, Use Again” campaign to extend product lifetimes and recyclability.

Environmental Data explained >

How we assess product sustainability >

### Environmental footprint

| | |
|---|---|
| Carbon footprint (kg CO2 eq, Total Life cycle) | 13 |
| Environmental Disclosure | Product Environmental Profile |

## Use Better

### Materials and Substances

| | |
|---|---|
| Packaging made with recycled cardboard | Yes |
| Packaging without single use plastic | Yes |
| EU RoHS Directive | Compliant with Exemptions |
| REACh Regulation | REACh Declaration |
| California proposition 65 | WARNING: This product can expose you to chemicals including: Lead and lead compounds, which is known to the State of California to cause cancer and birth defects or other reproductive harm. For more information go to www.P65Warnings.ca.gov |

## Use Again

### Repack and remanufacture

| | |
|---|---|
| Circularity Profile | End of Life Information |
| Take-back | No |
| WEEE Label | The product must be disposed on European Union markets following specific waste collection and never end up in rubbish bins. |

Dimensions Drawings

## Dimensions

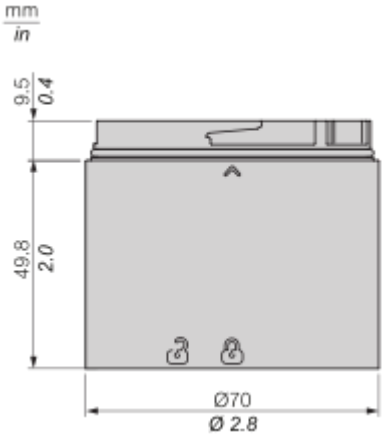

Mounting and Clearance

## Mounting Overview

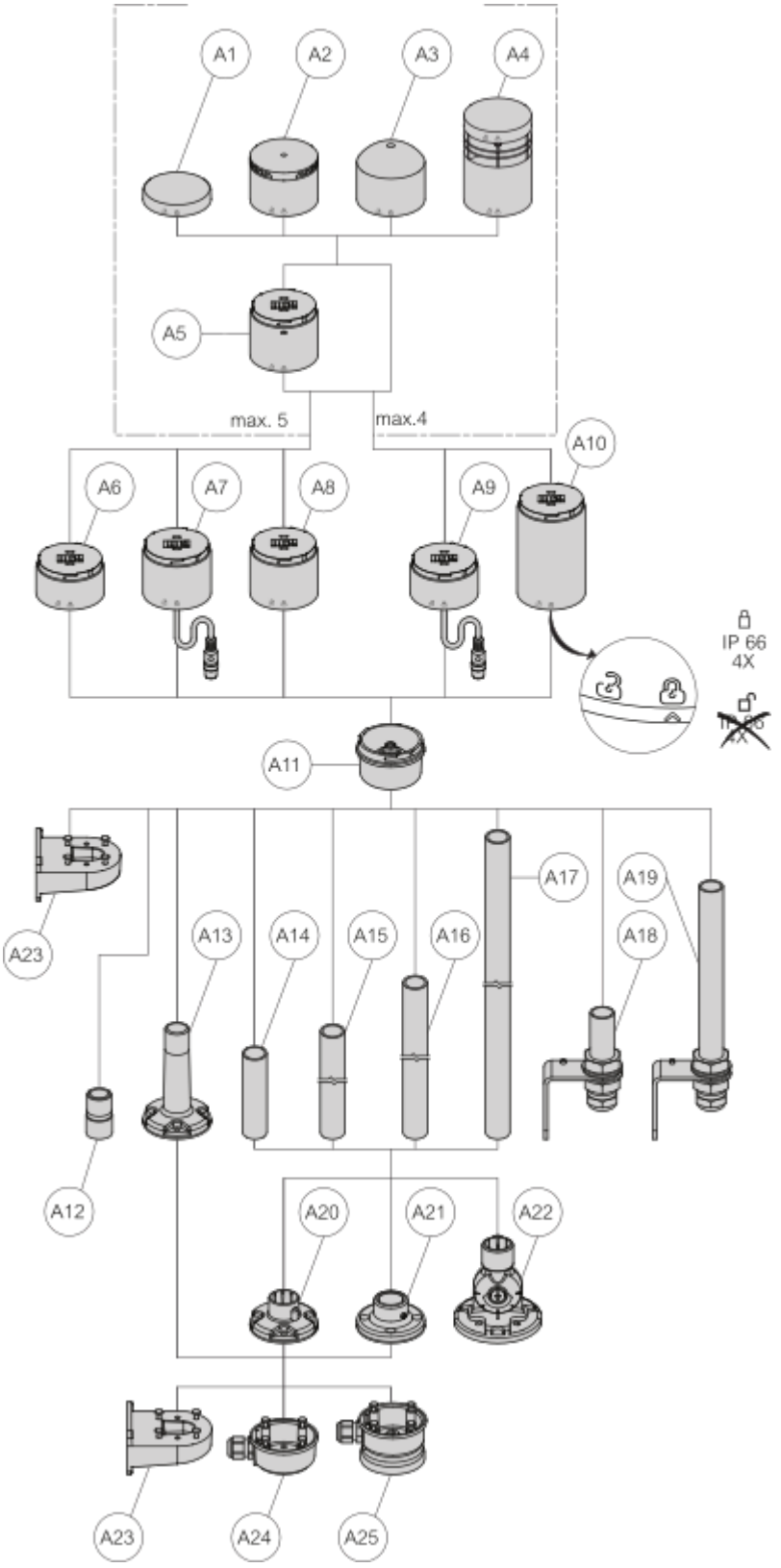


| Drawing | Part Number | Part Description |
|---|---|---|

| | | |
|---|---|---|
| A1, A6, A11 | XVB7C21B... | 24V Base Direct / Tube & Cover |
| A1, A7, A11 | XVB7C31 | IO Link Base Direct / Tube & Cover |
| A1, A8, A11 | XVB7C51 | USB Base Direct / Tube & Cover |
| A1, A9, A11 | XVB7C61 | M12 Base Direct / Tube & Cover |
| A1, A10, A11 | XVB7C21M... | AC Base Direct / Tube & Cover |
| A2 | XVB7C9S... | 2 Tones Buzzer |
| A2 | XVB7C9T | 8 Tones Buzzer |
| A2 | XVB7C9SS | Self-Adjust Sounder 1 Tone |
| A3 | XVB7L2... | Beacon Steady Lens |
| | XVB7L6... | Beacon Flashing Lens |
| A4 | XVB7C9V | Editable Voice Alarm |
| A5 | XVB7C2... | Steady Lens |
| | XVB7C5... | Blinking Lens |
| | XVB7C6... | Flashing Lens |
| | XVB7CR... | Rotating Lens |
| | XVB7CM9 | Multi-function Clear lens |
| A12 | XVZ00 | 1/2" NPT Adapter |
| A13 | XVZ02... | Plastic Fixing Plate With Pole |
| A14 | XVZ100 | Alu Ø25mm Pole 100mm Length |
| A15 | XVZ250 | Alu Ø25mm Pole 250mm Length |
| A16 | XVZ400 | Alu Ø25mm Pole 400mm Length |
| A17 | XVZ800 | Alu Ø25mm Pole 800mm Length |
| A18 | XVZ100T | L Bracket Alu Ø25mm Pole 100mm |
| A19 | XVZ250T | L Bracket Alu Ø25mm Pole 250mm |
| A20 | XVZ01... | Plastic Fixing Plate |
| A21 | XVZ11 | Metal Fixing Plate |
| A22 | XVZ06... | Plastic Foldable Bracket |
| A23 | XVZ09 | Plastic Wall Mount Bracket |

| | | |
|---|---|---|
| A24 | XVZ07 | Side Entry Adapter |
| A25 | XVZ08 | Magnetic Adapter |

Technical Illustration

**Dimensions**

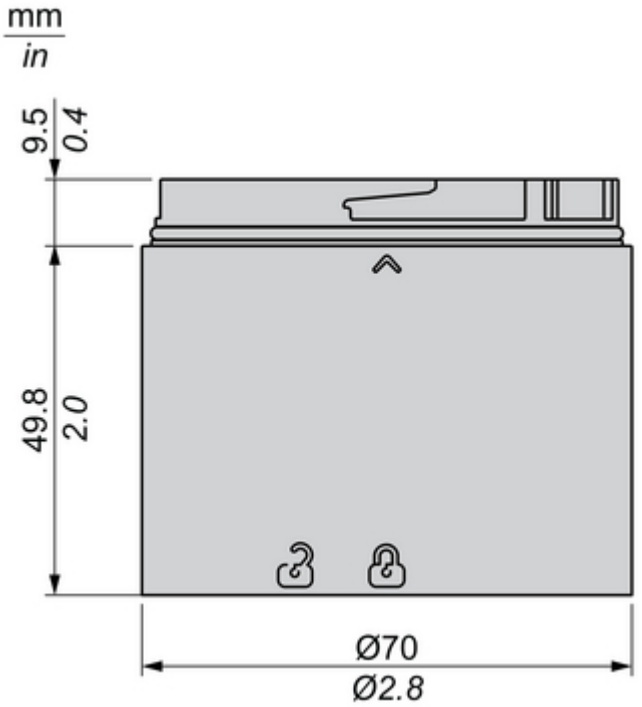

Offer Marketing Illustration

## Product benefits / Features

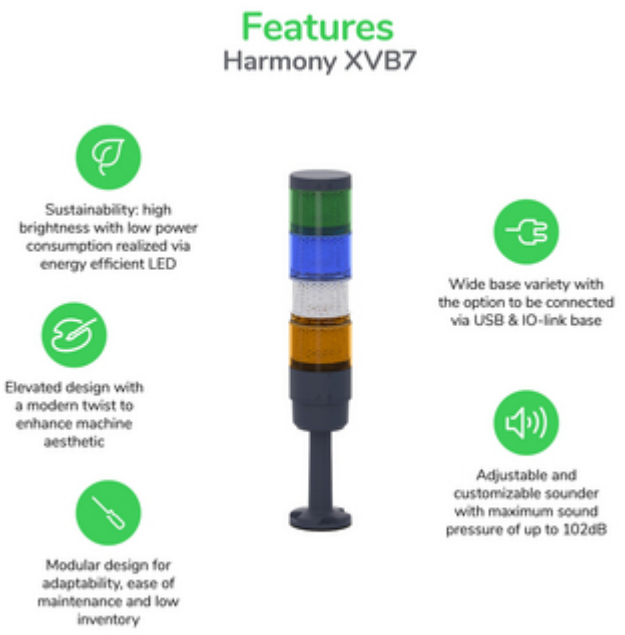

Offer Marketing Illustration

## Product benefits / Features

Image of product / Alternate images

**Alternative**

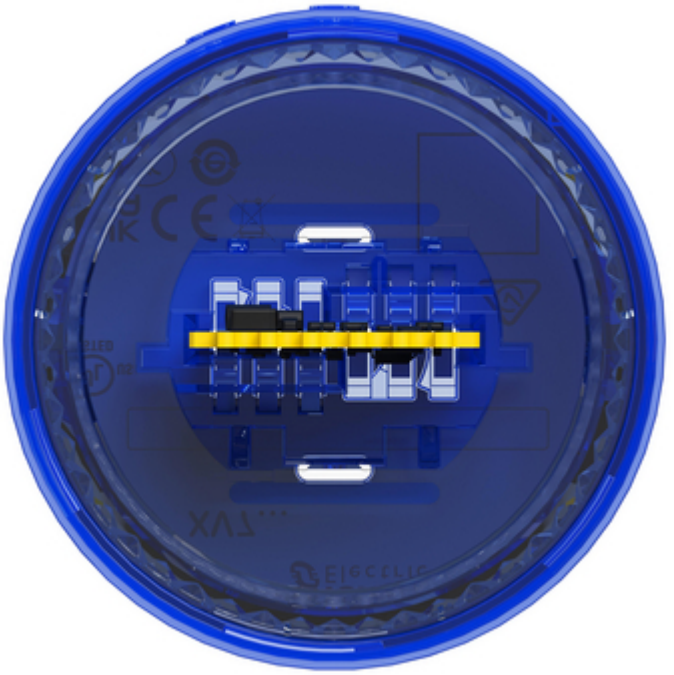

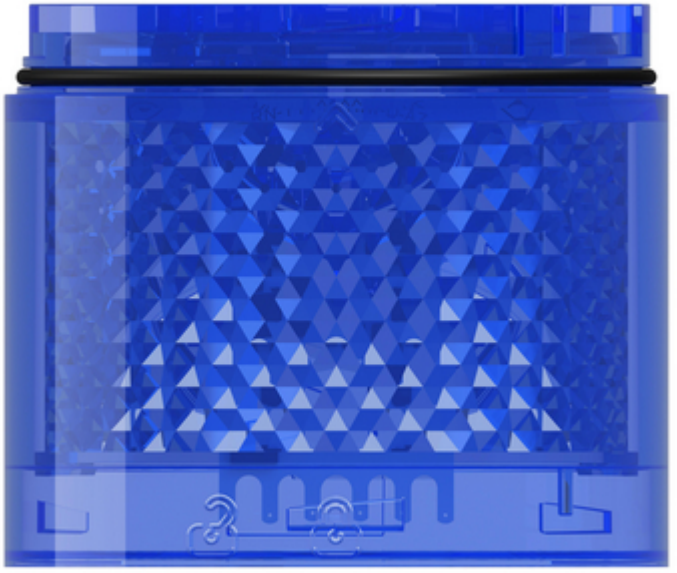

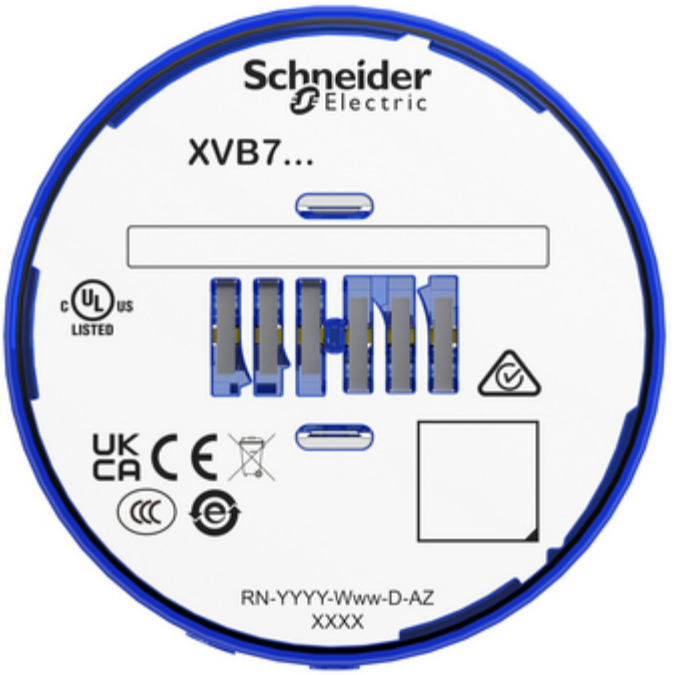
Schneider Electric
XVB7...
c UL us LISTED
UK CA
RN-YYYY-Www-D-AZ
XXXX

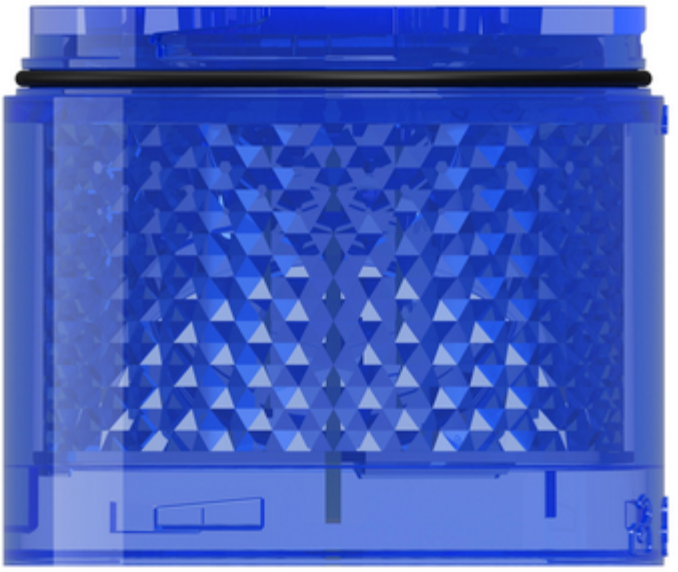

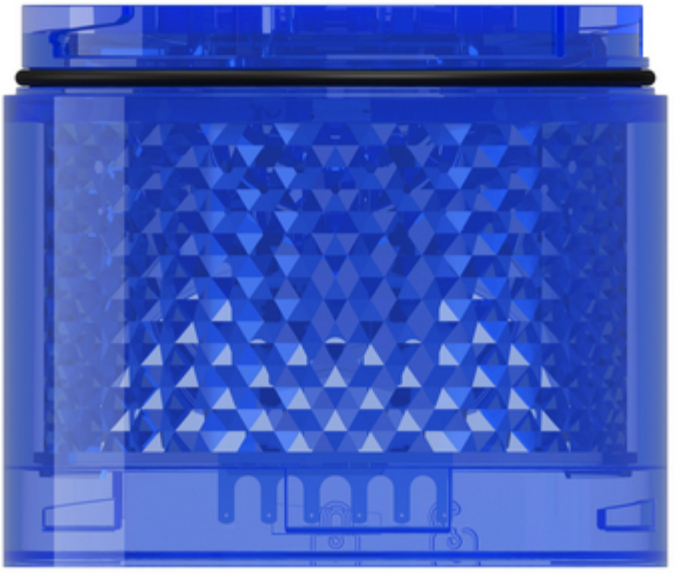

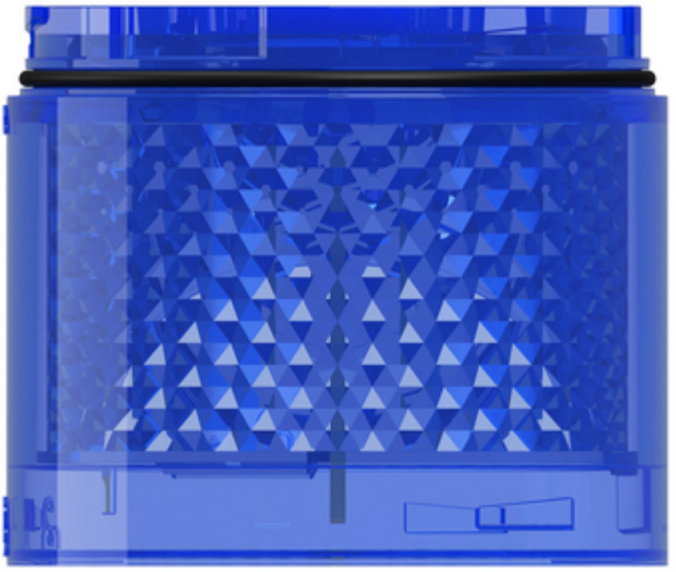

Image of product in real life situation